INOVANCE

AM320 & AM521/AM522 Controllers

High performance, compact EtherCAT-enabled CODESYS controller

- Compact footprint
- PLCopen compliant axis control
- EtherCAT real-time and multiprotocol
- Quad-core processor
- IEC 61131-3 compliant CODESYS software

CANopen EtherCAT EtherNet/IP CODESYS OPC UA CE cULus LISTED E467465 IND.CONT.EQ

AM320/AM522 Controllers Overview

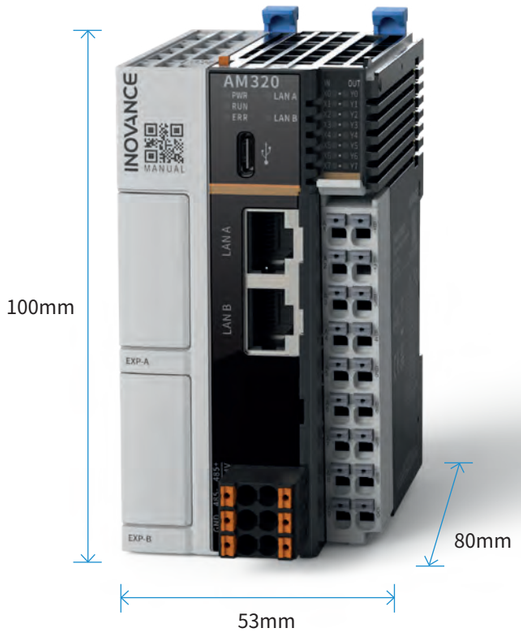

AM320

CPU with dual Ethernet port

- Quad-core processor
- Dual network port with independent IP Address
- 2 expansion slots
- 30 CANopen axes for PTP movements (optional card required)
- 4 pulse axes
- 4 encoder inputs (8x high speed inputs, up to 200 kHz)
- Supports up to 16 GL20 local expansion modules

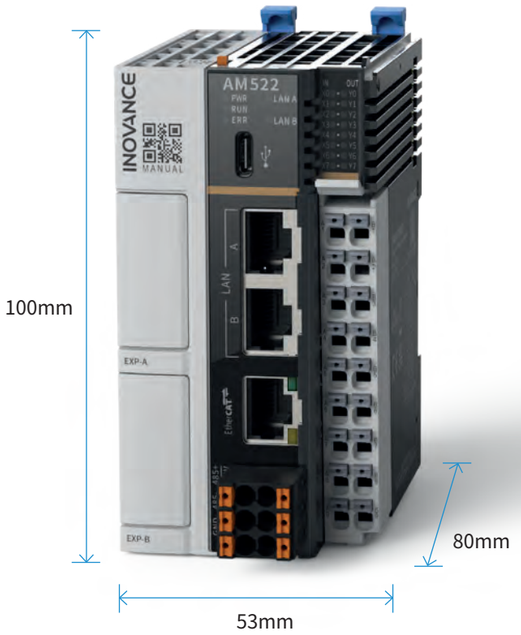

AM521/AM522

Motion control CPU

- Quad-core processor
- EtherCAT real-time network
- 2 expansion slots
- 8 (AM521) or 16 (AM522) EtherCAT synchronized axes
- Up to 127 EtherCAT slaves)
- 30 CANopen axes for PTP movements (optional card required)
- 4 pulse axes
- Axis group for lineal and circular interpolation
- 4 encoder inputs (8x high speed inputs, up to 200 kHz)
- Supports up to 16 GL20 local expansion modules
- Supports up to 8 (AM521) or 16 (AM522) EtherCAT axes
- I/O can be expanded by using EtherCAT bus coupler GL20-RTU-ECT

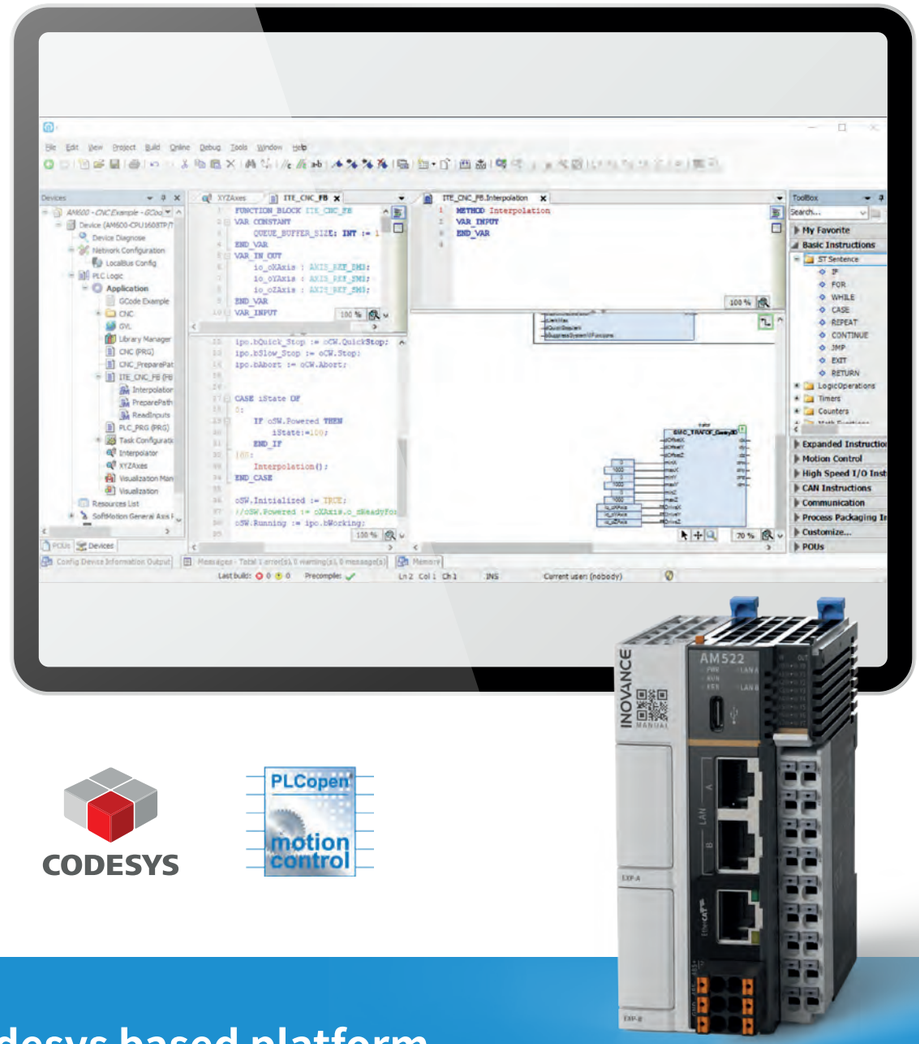

CODESYS

PLCopen motion control

Codesys based platform

- InoProShop PC-tool
- IEC 61131-3 compliant CODESYS sofware
- PLCopen compliant
- Programming languages LD, ST, SFC
- Intuitive axis and local/remote I/O configuration
- Easy to integrate INOVANCE servos and AC drives
- CAM table can be easily configured by using the graphical editor
- Monitor, trace and gather any program variable with the virtual oscilloscope function

Higher performance than previous generation

SINGLE CORE

QUAD CORE

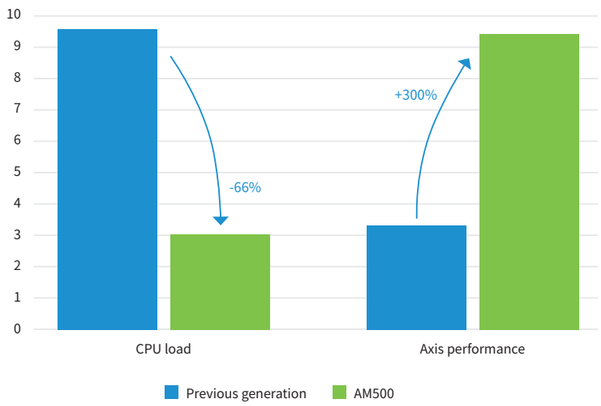

- 1ms EtherCAT cycle with 4 synchronized axes (AM521/AM522)
- Supports up to 127 EtherCAT slaves (AM521/AM522)
- Supports up to 63 Modbus TCP and Ethernet/IP slave stations
- Supports up to 16 OPC UA clients
- Supports up to 31 Modbus RTU nodes
- Supports up to 30 CANopen slaves

Easier installation, commissioning and maintenance

The USB type-C port allows the connection of the PC to upgrade the firmware and/or uploading/downloading/debugging of the application program

Easy wiring with spring clamp terminals.

Slim and compact I/O expansion modules (GL20). Easy to plug in and remove for fast replacement.

Compact design and tool-free wiring

Simple lever system allows easy removal of individual modules from the DIN rail

Easy wiring with spring-type terminals, with large 1.5mm² apertures

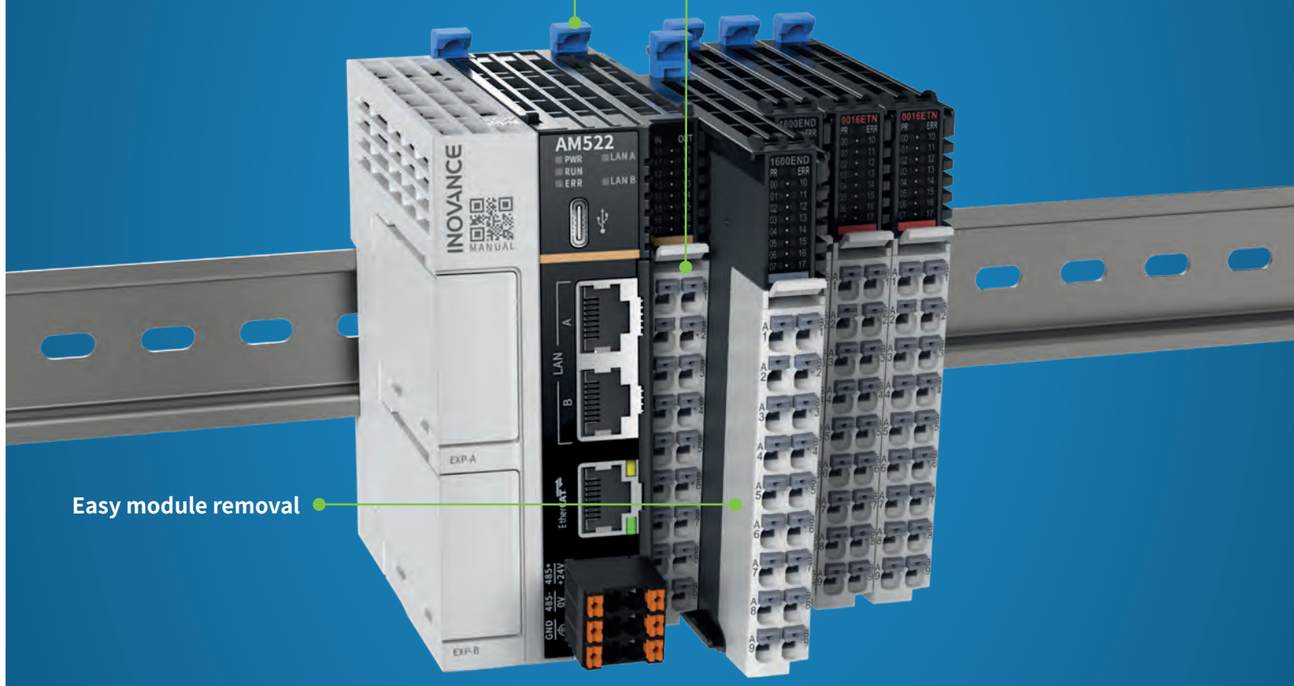

Easy module removal

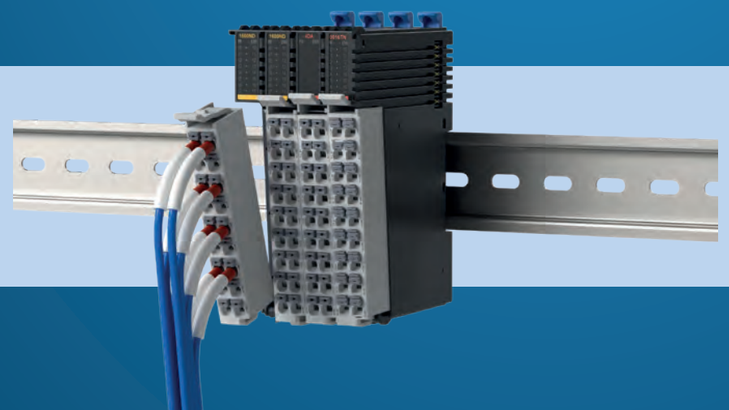

Removable terminals minimizes installation errors

Scalable system architecture

Multiple configurations

The AM320 and AM521/AM522 controllers can cover anything from the simplest PLC application to the most complex motion control application using EtherCAT servo drives. In addition, they support a wide variety of industrial protocols such as Modbus TCP, Ethernet/IP, CANopen, OPC-UA.

AM320

CPU with two independent IP addresses network ports.
It supports two Modbus TCP or Ethernet/IP master-slave communication.
Machine network isolated from external network.
Redundant Ethernet network.

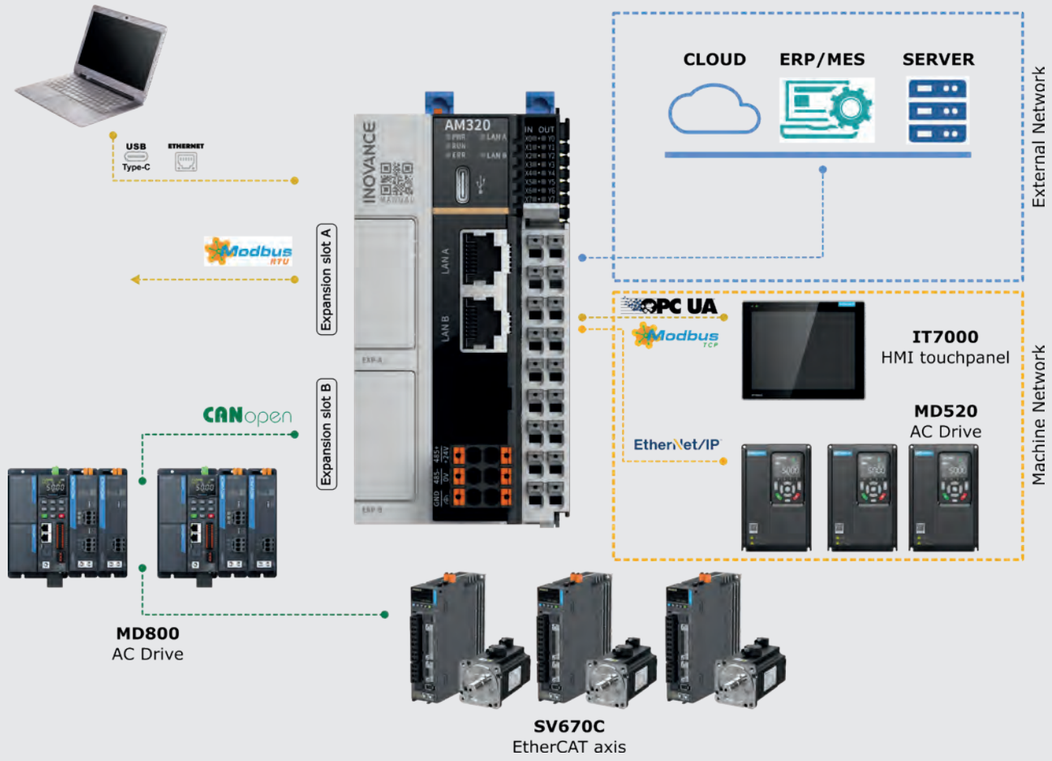

AM521/AM522

CPU with real-time EtherCAT interface.
Motion control for up to 16 EtherCAT synchronized axes.
Single or multi-axis movements with PLCopen motion POUs.
Linear and circular interpolation and CAM functionality.

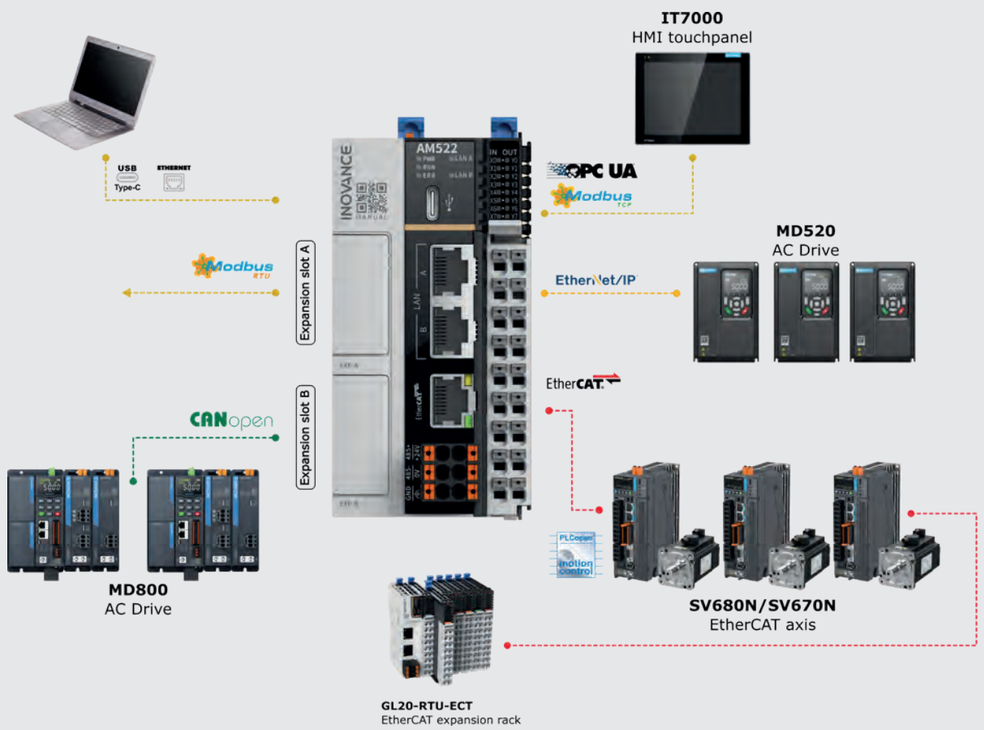

Specifications

Basic specifications of easy series controller

Item	AM320-0808TP	AM320-0808TN	AM521-0808TP	AM522-0808TP	AM521-0808TN	AM522-0808TN
Part Number	01440609	01440476	01440608	01440610	01440477	01440475
Motion Axis	4 pulse axes		8 EtherCAT axes + 4 pulse axes	16 EtherCAT axes + 4 pulse axes	8 EtherCAT axes + 4 pulse axes	16 EtherCAT axes + 4 pulse axes
Expansion modules (GL20)	The main body can be expanded with the full range of GL20 modules (16)					
Expansion slots (GE20)	Supports 2 slots for GE20 expansion cards (serial port/CAN, digital, analog, TF card, RTC clock)					
Ethernet	2x Ethernet ports (2 independent IP Addresses)		2x Ethernet ports (built-in switch)			
EtherCAT	EtherCAT not supported		Supports up to 127 EtherCAT slaves 1ms cycle 4 axes synchronization			
Serial communication	1x RS485 Supports 2x RS232/485 expansion cards Supports free protocol, 31 Modbus RTU/ASCII slaves (recommended)					
CAN communication	1 (requires expansion card), supports CANlink/CANopen master/slave (up to 30 CANopen or 62 CANlink slaves)					
Program storage	10M program capacity					
Data storage	20M data capacity (512kB Non-volatile)					
Instruction execution time	0.143μs bit manipulation instruction 0.416μs word processing instruction					
Dimensions (WxHxD: mm)	53 mm × 100 mm × 80 mm					
Other interfaces	USB type-C (host power supply, program upload and download, debugging, firmware upgrade)					
CAM and interpolation	Support CAM and interpolation motion					
Encoder axis	4 channel encoder axis (8 x high speed inputs, up to 200 kHz)					
Built in I/Os	8 inputs (selectable sink/source) 8 outputs (source type)	8 inputs (selectable sink/source) 8 outputs (sink type)	8 inputs (selectable sink/source) 8 outputs (source type)		8 inputs (selectable sink/source) 8 outputs (sink type)	
Programming languages	IEC 61131-3 standard: Structured Text (ST), Ladder Diagram (LD), Sequential Function Chart (SFC), Continuous Function Chart (CFC)					
Power supply	DC 24V±10%, 1A short circuit and reverse polarity protection					

Note: In case of more than 16 EtherCAT synchronized axes please contact with your local Inovance representative.

Expansion capability

GE20 Expansion cards

Communication capabilities

- RS485 connection - up to 31 slaves
- CANopen - up to 30 slaves (requires expansion card)
- Modbus TCP - up to 63 slaves
- Ethernet/IP - up to 63 slaves
- Up to 11 serial ports – one onboard (RS485), two GE20 expansion cards (RS232/485) and four GL20-2SCOM expansion modules (RS232/485)
- OPC-UA up to 16 clients

Product appearance	Expansion card	Product code	Description	Slot A	Slot B
	GE20-4DO-TN	01480033	4 channel sink outputs	✓	✓
	GE20-4DI	01480032	4 channel source/sink inputs	✓	✓
	GE20-2AD1DA-I	01480027	2 analog inputs and 1 analog current output	✓	✓
	GE20-2AD1DA-V	01480028	2 analog inputs and 1 analog voltage output	✓	✓
	GE20-232/485-RTC	01480035	RS232/485 expansion card with RTC		✓
	GE20-232/485	01480029	RS232/485 expansion card	✓	✓
	GE20-CAN-485	01480034	CAN/RS485 expansion card with RJ45 interface	✓	
	GE20-RTC	01480031	RTC expansion card		✓
	GE20-TF	01480030	TF expansion card		✓

Expansion card size: 54*30*1.2 (mm)

Expansion capability

GE20 Expansion cards

Digital expansion card

Material code	01480033	Material code	01480032
Appearance		Appearance	
Model	GE20-4DO-TN	Model	GE20-4DI
Description	4 channel output module	Description	4 channel input module
Slot	A/B	Slot	A/B
IP level	IP20	IP level	IP20
Operational temperature	-20 °C ～ 55 °C	Operational temperature	-20 °C ～ 55 °C
Output type	Digital transistor	Input type	Digital transistor
Source/sink (PNP/NPN)	Sink (NPN)	Source/sink (PNP/NPN)	Source/sink
Channels	4	Channels	4
Output voltage	24 V DC (20.4 V DC ～ 26.4 V DC)	Input voltage	24 V DC ± 10% (21.6 V DC ～ 26.4 V DC)
Output (resistance load)	0.5 A/point, 1 A/common point	Input resistance	5.6 kΩ
Output (inductance load)	6 w/24 V DC (in total)	ON current	＞3.5 mA
Output (lamp load)	1 w/24 V DC (in total)	OFF current	＜1.5 mA
Hardware ON/OFF response	Within 100 us	Input response	≈15 ms (hardware RC filter)
Leakage current (ON->OFF)	10 uA below	ON voltage	⩾15 V DC
Frequency	Resistance load: 100 Hz, inductance load: 0.5 Hz, lamp load: 10 Hz	OFF voltage	⩽5 V DC
Isolation	Opto-isolation	Software filter	NOT support
Protection function	Surge suppression	Isolation	Opto-isolation

Analog expansion card

Material code	01480028		
Appearance			
Model	GE20-2AD1DA-V		
Description	2 channel analog inputs plus 1 channel analog input, voltage type		
Slot	A/B		
IP level	IP20		
Operational temperature	-20 °C～55 °C		
Input type	Analog input	Output type	Analog output
Input mode	Current/voltage	Output mode	Voltage
Input channels	2	Output channel	1
Resolution	12 bit	Resolution	12 bit
Conversion time	6 ms/channel	Conversion time	1 ms/channel
Input range	0 ~ 10 v/0 mA ～ 20 mA	Output range	0 ~ 10 v
Current input resistance	250 Ω	Voltage output resistance	＞2 KΩ
Input accuracy (25 °C)	Voltage ±1%, Current±1% (full range)	Output accuracy (25 °C)	±1% (full range)
Input accuracy (-20 °C ～ 55 °C)	Voltage ±3%, Current±3% (full range)	Output accuracy (-20 °C ～ 55 °C)	±5% (full range)
Digital input range	0 ～ 20,000	Digital output range	0 ～ 20,000

Material code	01480027		
Appearance			
Model	GE20-2AD1DA-I		
Description	2 channel analog inputs plus 1 channel analog input, current type		
Slot	A/B		
IP level	IP20		
Operational temperature	-20 °C ～ 55 °C		
Input type	Analog input	Output type	Analog output
Input mode	Current/ voltage	Output mode	Current
Input channels	2	Output channel	1
Resolution	12 bit	Resolution	12 bit
Conversion time	6ms/ channel	Conversion time	1 ms/channel
Input range	0 ~ 10 v/ 0 mA ～ 20 mA	Output range	0 mA ～ 20 mA
Current input resistance	250 Ω	Current output resistance	0 Ω ～ 500 Ω
Input accuracy (25 °C)	Voltage ±1%, Current ±1% (full range)	Output accuracy (25 °C)	±1% (full range)
Input accuracy (-20 °C ～ 55 °C)	Voltage ±3%, Current ±3% (full range)	Output accuracy (-20 °C ～ 55 °C)	±5% (full range)
Digital input range	0 ～ 20,000	Digital output range	0 ～ 20,000

Expansion capability

GE20 Expansion cards

Communication expansion card

Material code	01480035	01480029	01480034
Appearance			
Model	GE20-232/485-RTC	GE20-232/485	GE20-CAN-485
Description	RS232/RS485 communications card with RTC	RS232/ RS485 communications card	CAN/RS485 communications card
Slot	B	A/B	A
IP level	IP20	IP20	IP20
Operational temperature	-20 °C ～ 55 °C	-20 °C ～ 55 °C	-20 °C ～ 55 °C
RS485/RS232	1	1	1
Terminal resistor	Set via DIP switch	Set via DIP switch	NO terminal resistor for RS485 Built-in terminal resistor for CAN
Communications ability	Up to 31 slaves Distance between adjacent slaves not over 3m	Up to 31 slaves Distance between adjacent slaves not over 3 m	Up to 31 slaves(RS485) Distance between adjacent slaves not over 3 m Up to 63 slaves (CAN)
Baud rate of RS485/RS232	9600/19200/38400/ 57600/115200 bit/s	9600/19200/38400/ 57600/115200 bit/s	9600/19200/38400/ 57600/115200 bit/s
Baud rate of CAN	/	/	1 Mbit/s: distance < 20 m 500 kbit/s: distance < 80 m 250 kbit/s: distance < 150 m 125 kbit/s: distance < 300 m 100 kbit/s: distance < 500 m 50 kbit/s: distance < 1,000 m
RTC accuracy	120 sec/ month	/	/
RTC format	YYYY/MM/DD/HH/MM/SS	/	/
In-built lithium battery	CR2302, 3 year life cycle, removable	/	/

RTC expansion card

Material code	01480031
Appearance	
Model	GE20-RTC
Description	RTC extension card
Slot	B
IP level	IP20
Operational temperature	-20 °C ～ 55 °C
RTC accuracy	120 sec/month
RTC format	YYYY/MM/DD/HH/MM/SS
In-built lithium battery	CR2302, 3 year life cycle, removable

TF card expansion card

Material code	01480030
Appearance	
Model	GE20-TF
Description	TF card extension card
Slot	B
IP level	IP20
Operational temperature	-20 °C ～ 55 °C
SD card capacity	NOT over 32 G
SD card type	TransFlash (Micro SD)

Expansion capability

GL20 expansion modules

Great performance with ultra fast response
Microsecond level response | Synchronous control

Compact size and wiring without tools
Compact size | Fast installation | Fast replacement

Stable and reliable design
Stable connection | Gold plating process | Safety and reliability

Many variants to suit different systems
Multiple protocols | Many variants

Applicable to either bus coupler or CPU

NEW generation distributed I/O system

GL20 slim and compact I/O modules

DESIGN AWARD 2022

Expansion capability

GL20 expansion modules

Compact Size

Saves 2/3 of the space in the cabinet compared to the previous generation I/O series

Space utilisation maximised

Thickness reduced to **12mm**
2/3 cabinet space saved

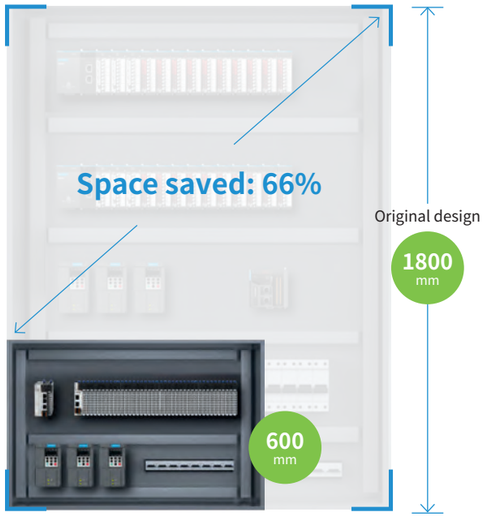

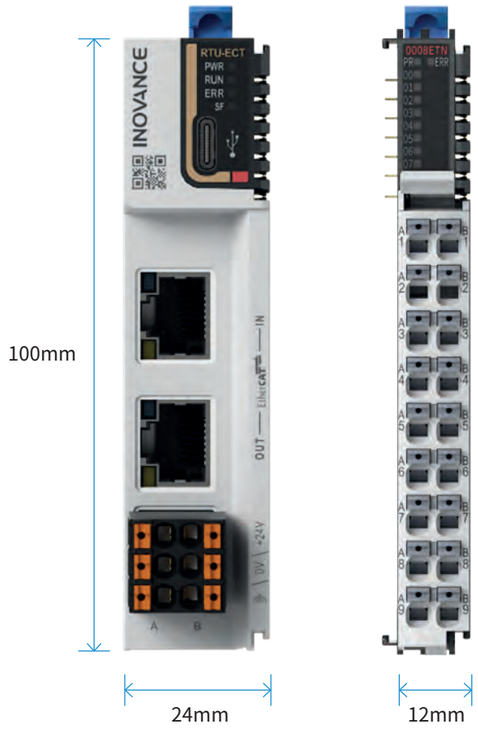

Expansion capability

GL20 modules – EtherCAT bus coupler

EtherCAT®

- Min. cycle time of 125 microseconds
- Allows EtherCAT alias configuration
- USB type-C port for firmware upgrade

Specification	Description
Dimensions (WxHxD:mm)	24×100×83
Max. number of expansion modules	16
Protection	Overcurrent, reverse-connection and surge protection
Operating ambient temperature	-20~55°C
Operating ambient humidity	Less than 95% and no condensation
IP rating	IP20
Power supply	+24 VDC
Process data	Up to 1,024 input bytes and 1,024 output bytes
Mailbox size	Up to 256 input bytes and 256 output bytes
Alias	It admits the configuration of EtherCAT aliases through the master. Expansion modules connected behind ECT do not support alias access and configuration. Range: 1~65535
EtherCAT cycle	Min. cycle time of 125 microseconds
EtherCAT port	2 x RJ45
Communication rate	100 M, full duplex
Transmission distance	100 meters
Firmware update port	USB type-C port for firmware upgrade

Expansion capability

GL20 expansion modules

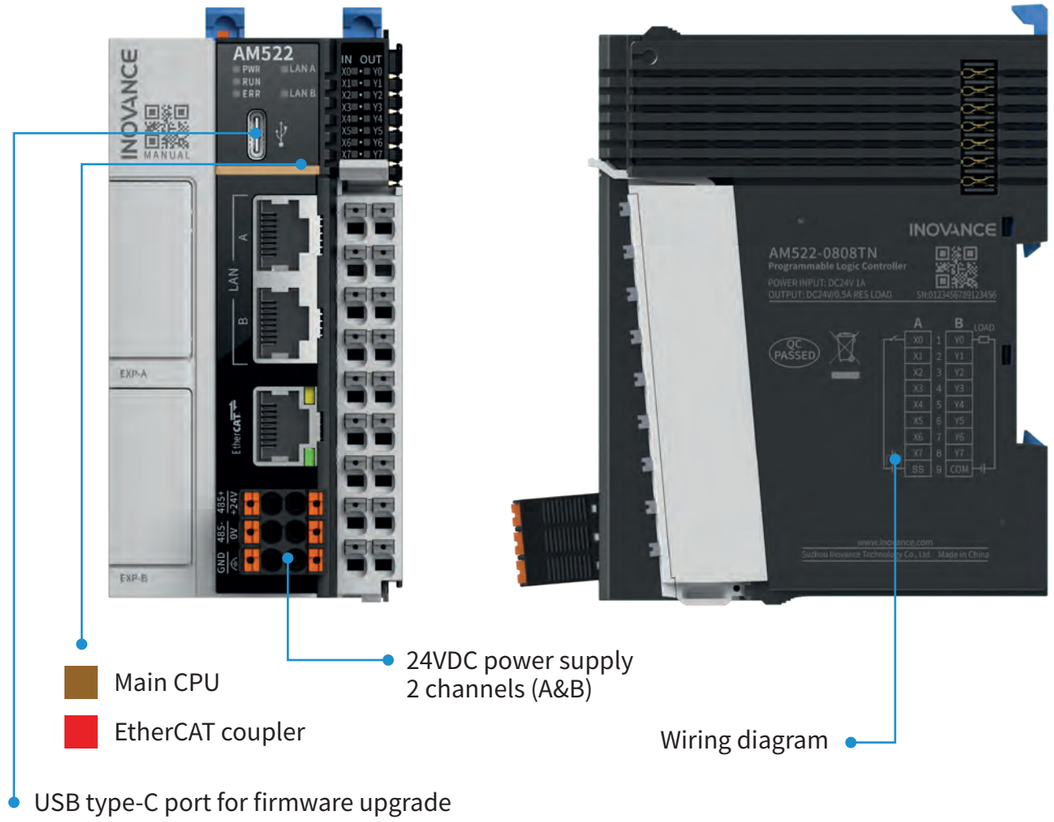

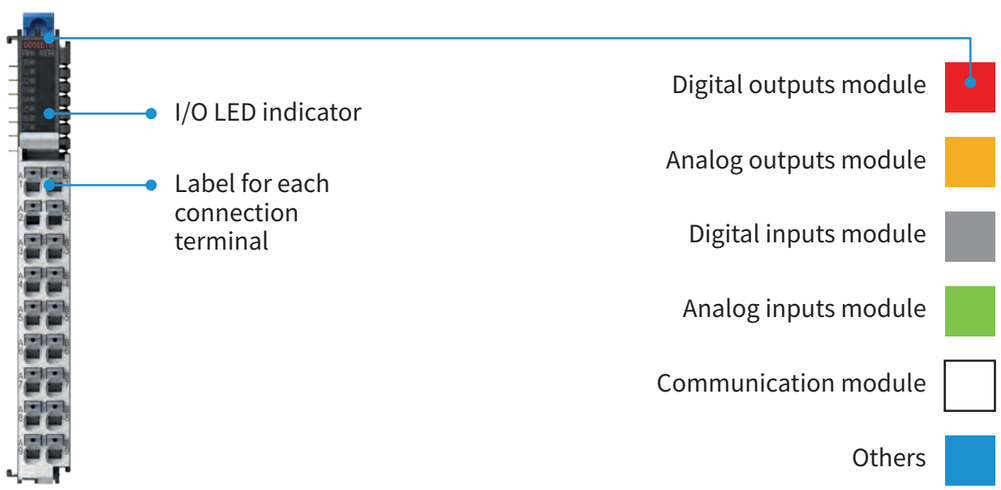

Please note: the colour codes specify the module type

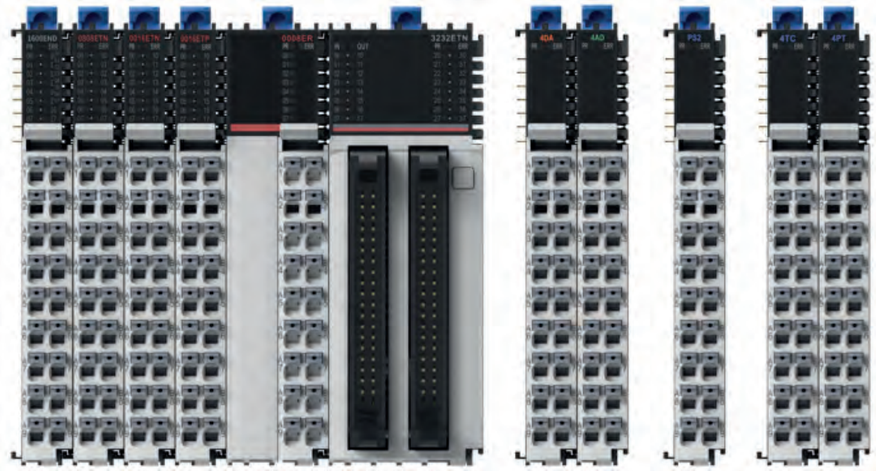

Type of module	Model	Product code	Description
Bus coupler	GL20-RTU-ECT	01440286	EtherCAT slave bus coupler. Up to 16 expansion modules can be added
	GL20-RTU-PN	01440289	PROFINET slave bus coupler. Up to 16 expansion modules can be added
Digital inputs	GL20-1600END	01440291	16 x source (PNP)/sink (NPN) digital inputs module. Input filter from 0.25 ms to 32 ms
	GL20-0800END	01440381	8 x source (PNP)/sink (NPN) digital inputs module. Input filter from 0.25 ms to 32 ms
	GL20-3200END	01440466	32 x source (PNP)/sink (NPN) digital inputs module. Input filter from 0.25 ms to 32 ms
	GL20-3200END-M	01440378	32 x source (PNP)/sink (NPN) digital inputs module. Input filter from 0.25 ms to 32 ms (Requires T024-K terminal block and extension cable)
Digital outputs	GL20-0008ETP	01440380	8 x source (PNP) transistor outputs module. Response time 100 µs
	GL20-0008ETN	01440379	8 x sink (NPN) transistor outputs module. Response time 100 µs
	GL20-0016ETP	01440292	16 x source (PNP) transistor outputs module. Response time 100 µs
	GL20-0016ETN	01440293	16 x sink (NPN) transistor outputs module. Response time 100 µs
	GL20-0032-ETN	01440467	32 x sink (NPN) transistor outputs module. Response time 100 µs
	GL20-0032ETN-M	01440377	32 x sink (NPN) transistor outputs module. Response time 100 µs (Requires T024-K terminal block and extension cable)
Relay outputs	GL20-0008ER	01440334	8 x relay outputs module. Response time 15 ms
Digital inputs & outputs	GL20-0808ETN	01440339	8 x sink (NPN) digital inputs and 8 x sink (NPN) transistor outputs module. Response time 100 µs. Input filter from 0.25 ms to 32 ms
	GL20-3232ETN-M	01440290	32 x source (PNP)/sink (NPN) digital inputs and 32 x sink (NPN) transistor outputs module. Response time 100 µs. Input filter from 0.25 ms to 32 ms (Requires T024-K terminal block and extension cable)
Analog inputs	GL20-4AD	01440288	4 x analog inputs module (resolution 16 bits, sampling time 250 µs)
Analog outputs	GL20-4DA	01440287	4 x analog outputs module (resolution 16 bits, sampling time 250 µs)
Temperature detection	GL20-4PT	01440337	4 x channel thermal resistance inputs temperature detection module (Pt100, Pt500, Pt1000, Cu100, KTY84, NTC5K, NTC10K)
	GL20-4TC	01440338	4 x channel thermocouple inputs temperature detection module (thermocouple type: B,E,N,J,K,R,S,T)
	GL20-PS2	01440351	Extra power supply module. The rated current of the internal bus of the coupler is 2 A. If a higher current is required, a combination of the coupler and the power supply unit GL20-PS2 should be used
Accessories	XA3210A-40-L0.5M-01	015310167	I/O extension cable - 0.5 m length with 2 FCN connectors (required for GL20-3200END-M/GL20-0032ETN-M/GL20-3232ETN-M. Details are available in the separate GL20 brochure)
	XA3210A-40-L2M-01	015310166	I/O extension cable - 2 m length with 2 FCN connectors (required for GL20-3200END/GL20-0032ETN-M/GL20-3232ETN)
	T024-K	015020452	40PIN MIL screw terminal block (Required for GL20-3200END-M/GL20-0032ETN-M/GL20-3232ETN-M. Details are available in the separate GL20 brochure)

Dimensions

AM320/AM521/AM522

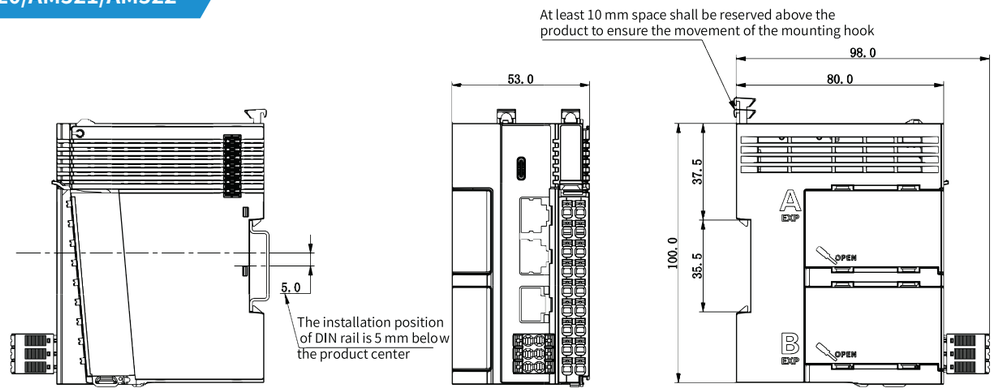

GL20-RTU-ECT

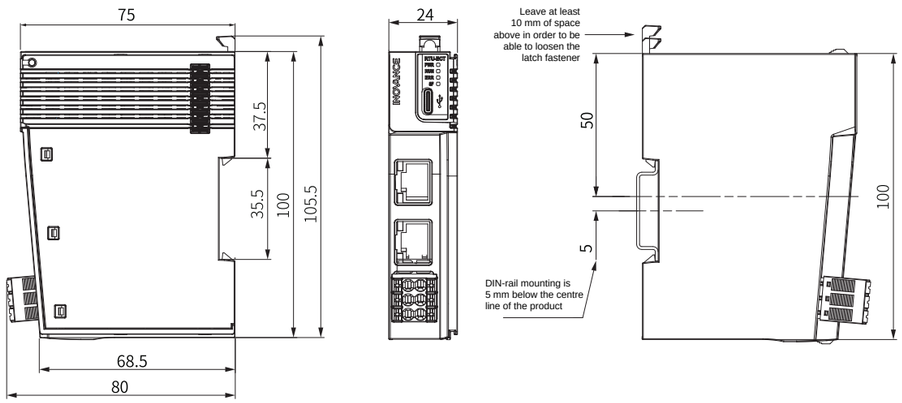

GL20-0008R, GL20-3200END, GL20-0032ETN

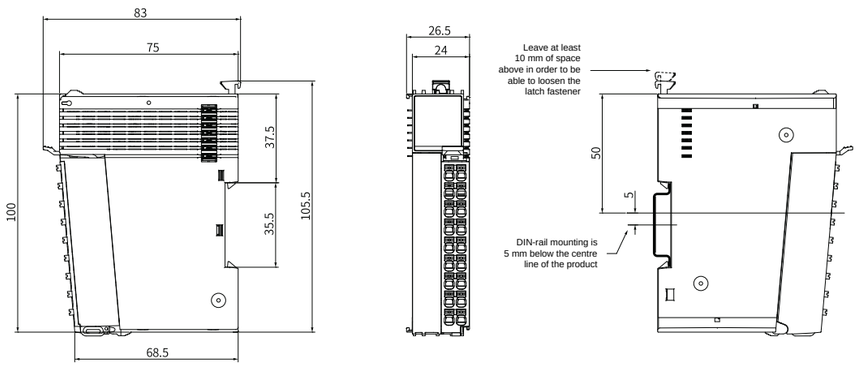

GL20-3232ETN-M

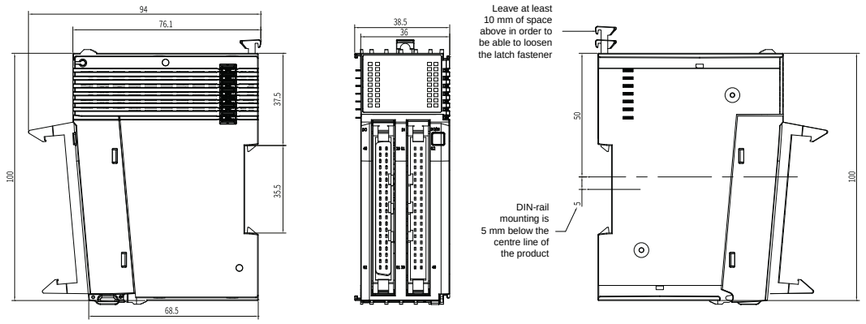

GL20-1600END, GL20-0800END, GL20-0008ETP, GL20-0016ETP, GL20-0016ETN, GL20-0808ETN, GL20-4AD, GL20-4DA, GL20-4PT, GL20-4TC

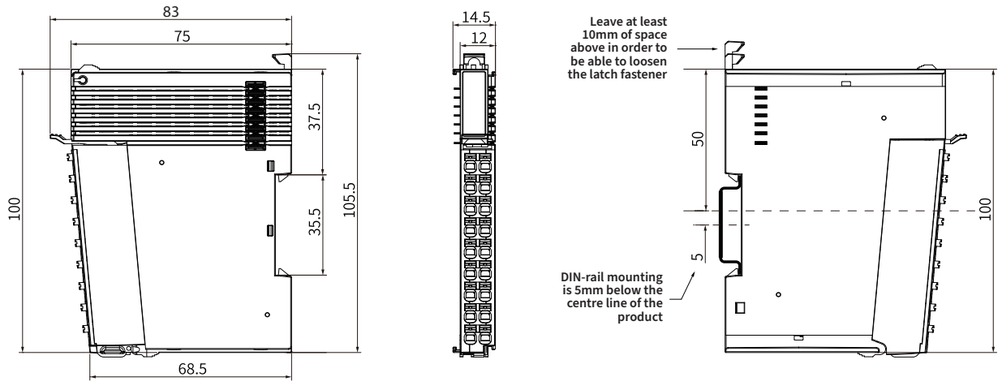

GL20-3200END-M, GL20-0032ETN-M

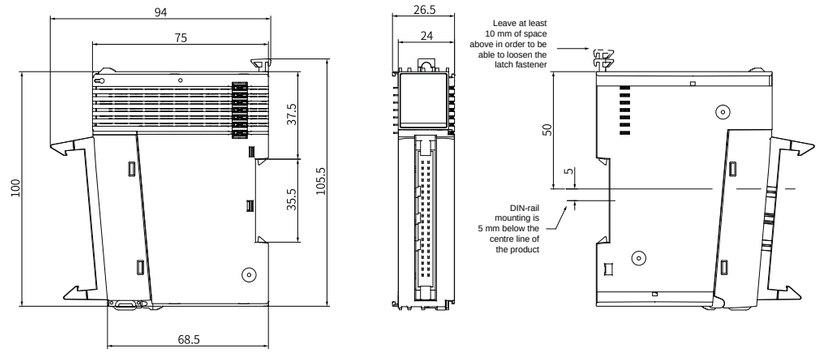

Please note: GL20-3200END-M, GL20-0032ETN-M, GL20-3232ETN-M require T024-K terminal block and extension cable.
Details are available in the separate GL20 brochure.

Driven by technology

AC drives

AC MultiDrives

MV drives

Single-Axis servos

Multi-Axis servos

EtherCAT

Robotics & motion controllers

PLCs & HMIs

CNC machine tool solutions

EtherCAT

Electric vehicle inverters

For more information, please contact our local offices.

International Offices

Germany-Stuttgart
Tel: +49 (0) 7144 8990
sales.de@inovance.eu

Italy-Milano
Tel: +39 (0) 2268 22318
sales.it@inovance.eu

France-Bordeaux
Tel: +33 (0) 5594 01050
sales.fr@inovance.eu

Spain-Barcelona
Tel: +34 93 504 94 48
sales.es@inovance.eu

Turkey-Istanbul
Tel: +90 (216) 706 17 89
sales.tr@inovance.eu

South Korea-Seoul
Tel: +82 2 3489 8850
sales.kr@inovance.eu

India
Head Office Chennai Tel: +91 (0) 44 4380 0201

Ahmedabad Tel: +91 (0) 79 4003 4274

Mumbai Tel: +91 (0) 22 4971 5883

New Delhi Tel: +91 (0) 11 4165 4524

Sales Network in Kolkata, Bengaluru, Pune, Coimbatore, Hyderabad, Vadodara, Jaipur
info@inovance.ind.in

Hong Kong SAR
International export office
Tel: +852 2751 6080
info@inovance.eu

For other country distributors, contact the Hong Kong office.

Inovance Technology Companies
Shenzhen Inovance Technology Co. Ltd.
Suzhou Inovance Technology Co. Ltd.

INOVANCE
www.inovance.eu

©Inova Automation Co., Ltd. 2023. The information contained in the brochure is for guidance only.

Data code: 19120266 V0.2