INOVANCE

User Guide

AC802 Intelligent Machine Controller

19011383 A00

1

Thank you for purchasing the AC802 intelligent machine controller developed and manufactured independently by Inovance.
The booksize all-metal AC802 controller delivers a variety of network interfaces and powerful motion control performance. Equipped with an Intel Celeron CPU with excellent computing capabilities, a 4 GB or above DDR4 memory and a 128 GB SSD hard drive, it is a perfect match for high-load computing applications.
This guide mainly describes the specifications, characteristics, and usage of the AC802 series controller. Read this guide carefully before using to fully understand the product and ensure safety. For how to use the user program development environment and how to design user programs, see the AC800 Series Intelligent Machine Controller Hardware User Guide and Medium-sized PLC Programming Guide. You can find the latest version on our website (www.inovance.com).

Safety Instructions

Safety Precautions

1. Before installing, using, and maintaining this equipment, read the safety information and precautions thoroughly, and comply with them during operations.
2. To ensure the safety of humans and equipment, follow the signs on the equipment and all the safety instructions in this user guide.
3. The "CAUTION", "WARNING" and "DANGER" signs are only supplements to the safety instructions.
4. Use this equipment according to the designated environment requirements. Damage caused by improper usage is not covered by warranty.
5. Inovance shall take no responsibility for any personal injuries or property damage caused by improper usage.

Safety Levels and Definitions

WARNING : The "WARNING" sign indicates that failure to comply with the notice may result in severe personal injuries or even death.

CAUTION : The "CAUTION" sign indicates that failure to comply with the notice may result in minor or moderate personal injury or damage to the equipment.

Please keep this guide well so that it can be read when necessary and forward this guide to the end user.

During control system design

WARNING

- Provide a safety circuit outside the PLC so that the control system can still work safely once external power failure or PLC fault occurs.
- Add a fuse or circuit breaker because the module may smoke or catch fire due to long-time overcurrent caused by operation above rated current or load short-circuit.

CAUTION

- An emergency stop circuit, a protection circuit, a forward/reverse operation interlocked circuit, and a upper position limit and lower position limit interlocked circuit must be set in the external circuits of PLC to prevent damage to the machine.
- To ensure safe operation, for the output signals that may cause critical accidents, please design external protection circuit and safety mechanism;
- Once PLC CPU detects abnormality in the system , all outputs may be closed; however, when a fault occurs in the controller circuit, the output may not be under control. Therefore, it is necessary to design an appropriate external control circuit to ensure normal operation;
- If the PLC output units such as relays or transistors are damaged, the output may fail to switch between ON and OFF states according to the commands;
- The PLC is designed to be used in indoor electrical environment (overvoltage category II). The power supply must have a system-level lightning protection device, assuring that overvoltage due to lightning shock cannot be applied to the PLC power supply input terminals, signal input terminals and output terminals and so forth, so as to avoid damage to the equipment.

Installation

WARNING

- Installation must be carried out by the specialists who have received the necessary electrical training and understood enough electrical knowledge.
- Disconnect all external power supplies of the system before removing/installing the module. Failure to do so may result in electric shock, module fault or malfunction.
- Do not use the PLC where there are dust, oil smoke, conductive dust, corrosive or combustible gases, or exposed to high temperature, condensation, wind & rain, or subject to vibration and impact. Electric shock, fire and malfunction may also result in damage or deterioration to the product.
- The PLC is open-type equipment that must be installed in a control cabinet with lock (cabinet housing protection >IP20). Only the personnel who have received the necessary electrical training and understood enough electrical knowledge can open the cabinet.

CAUTION

- Prevent metal filings and wire ends from dropping into ventilation holes of the PLC during installation. Failure to comply may result in fire, fault and malfunction.
- Ensure there are no foreign matters on ventilation surface. Failure to comply may result in poor ventilation, which may cause fire, fault and malfunction.
- Ensure the module is connected to the respective connector securely and hook the module firmly. Improper installation may result in malfunction, fault or fall-off.

Wiring

WARNING

- Wiring must be carried out by personnel who have received the necessary electrical training and understood enough electrical knowledge.
- Disconnect all external power supplies of the system before wiring. Failure to comply may result in electric shock, module fault or malfunction.
- Install the terminal cover attached to the product before power-on or operation after wiring is completed. Failure to comply may result in electric shock
- Perform good insulation on terminals so that insulation distance between cables will not reduce after cables are connected to terminals. Failure to comply may result in electric shock or damage to the equipment.

CAUTION

- Prevent dropping metal filings and wire ends drop into ventilation holes of the PLC at wiring. Failure to comply may result in fire, fault and malfunction.
- The external wiring specification and installation method must comply with local regulations. For details, see the wiring section in this guide.
- To ensure safety of equipment and operator, use cables with sufficient diameter and connect the cables to ground reliably.
- Ensure that all cables are connected to the correct interface. Failure to comply may result in module and external equipment fault.
- Tighten bolts on the terminal block in the specified torque range. If the terminal is not tight, short-circuit, fire or malfunction may be caused. If the terminal is too tight, fall-off, short-circuit, fire or malfunction may be caused.
- If the connector is used to connect with external equipment, perform correct crimping or welding with the tool specified by manufacturer. If connection is in poor contact, short-circuit, fire or malfunction may be caused.
- A label on the top of the module is to prevent foreign matters entering the module. Do not remove the label during wiring. Remember to remove it before system operation, facilitating ventilation.
- Do not bundle control wires, communication wires and power cables together. They must be run with distance of more than 100 mm. Otherwise, noise may result in malfunction.
- Select shielded cable for high-frequency signal input/output in applications with serious interference so as to enhance system anti-interference ability.

Operation and Maintenance

WARNING

- Maintenance & inspection must be carried out by personnel who have the necessary electrical training and experience.
- Do not touch the terminals while the power is on. Failure to comply may result in electric shock or malfunction.
- Disconnect all external power supplies of the system before cleaning the module or re-tightening screws on the terminal block or screws of the connector. Failure to comply may result in electric shock.
- Disconnect all external power supplies of the system before removing the module or connecting/removing the communication wirings. Failure to comply may result in electric shock or malfunction.

CAUTION

- Get with the guide and ensure safety before online modification, forcible output, and RUN/STOP operation.
- Disconnect the power supply before installing/removing the extension card.

Disposal

CAUTION

- Treat scrapped module as industrial waste. Dispose the battery according to local laws and regulations.

Product Information

Model Number

AC802-0222-U0R0

Mark	Description
A	A series controller

Mark	Structure
P	Controller+display
C	Booksize
M	Modular
R	Rack
T	Tower

Mark	Series
7	700
8	800
9	900

Mark	CPU
0	Celeron
1	Core i series

Mark	Model
2	AC802

Mark	Software
R0	Software specifications+version

Mark	System Version
0	0

Mark	System
W	Windows
L	Linux
U	Ubuntu
V	Vxworks

Mark	Hardware
First 2 digits	CPU (00–99) 00:i3-4010U; 01:i5-7200U; 02:3855U
3rd digit	Memory : 2^{n}×1G(1G~16G Max512G) (n is the third digit)
4th digit	SSD: 2^{n}×32G(32G~256G Max16T) (n is the fourth digit)
Mark	Expansion Card
First 3 digits	CAN: CAN expansion card
	HIO: HSIO expansiion card
	FER: ferroelectric memory card
	FAN: fan assembly
4th digit	Version

Nameplate

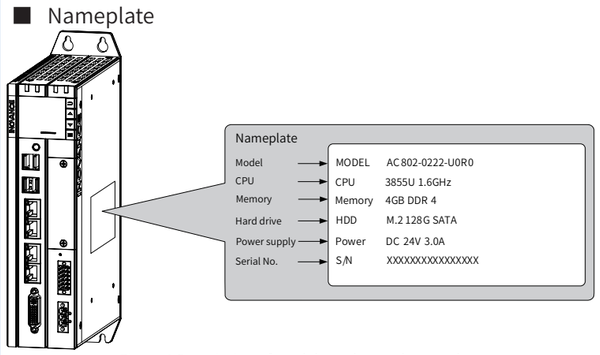

Figure 1 Description of model number and nameplate

Product Type	Description	Model	Serial No.
Booksize controller	3855u; 4 G memory; 128 G hard drive; 2 USB2.0 interfaces; 2 USB3.0 interfaces; 4 network ports; DVI-D; with display; multi-function expansion slot; internal Mini-PCIE expansion slot	AC802-0222-U0R0	01440101

General Specifications

Item	AC802-0222-U0R0
Power supply	24 VDC (–20% to 20%)
CPU	Intel 3855U,1.6GHz
Memory capacity	4 GB
Memory type	DDR4 SO-DIMM
Hard drive capacity	128 GB
Hard disk type	M.2(M key) SSD
SPI FLASH	64Mbit
Expansion slot	Not supported
Programming method	IEC 61131-3-compliant programming languages (LD, FBD, IL, ST, SFC, CFC)
Program execution mode	Compile and run
User program storage space	128 MB
User data storage capacity	128 MB
Power failure retention memory	5 MB, requires external UPS
Volume (mm)	225 (H) * 60 (W) * 160 (D)
Weight (kg)	< 2.5 Kg

Item	AC802-0222-U0R0
Cooling method	Natural cooling

External Interface

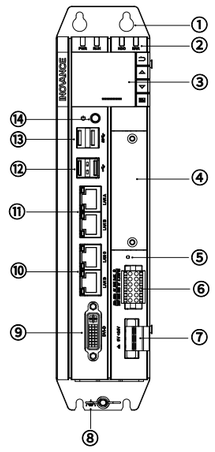

Figure 2 Diagram of controller interfaces

No.	Name	Function	Description
1	Rear earhook	Used for mount a booksize controller	Standard component

2 State indicator

There are four indicator lights on the display panel, which are PWR, RUN, HDD and ERR from left to right. They are described as follows:

No.	LED	Name	Function	State	Definition
1	PWR	Power indicator	Power status	Green	Off: abnormal On: normal
2	RUN	Running status indicator	Operation status	Green	Off: user program is not running Blinking: recognizing device On: user program is running
3	HDD	Hard drive indicator	Hard drive state	Green	Off: no hard drive detected Blinking: hard drive is working
4	ERR	Error indicator	Operation error	Red	Off: normal On: 1. overtemperature; 2. user program error; 3. system failure;

3 Display and buttons

The controller display is used to display basic information and perform simple commissioning. The buttons are defined as follows:

Button	Function
	Back
	Page up
	Page down
	Enter

No.	Name	Function	Description
4	Expansion slot	For CAN/optical fiber/RS232/RS485/ high-speed I/O	PCIE X1 protocol
5	Reset	For controller reset	Pinhole button

6 I/O communication interface

The pins of the I/O communication interface are as follows:

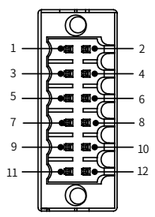

Description	Function	Signal Name	No.	No.	Signal Name	Function	Description
ON when the controller is on; OFF when the controller is off	On signal	⏻	1	2	P_STATUS	Power-on signal	Active after the controller is powered on
Enables power failure retention during ON-OFF switchover	Power failure detection signal	P_OK	3	4	P_STATUS	Operation status signal	Active after the controller is powered on
OFF during RUN; ON during STOP	RUN/ STOP	RUN	5	6	0 V	DO reference ground	--
--	Input common terminal	0 V	7	8	GND	comm. reference ground	--
--	RS485+	485+	9	10	232R	RS232 reception	--
--	RS485-	485-	11	12	232T	RS232 transmission	--

No.	Name	Function	Description
6	I/O communication interface	Note: The status control signals in the above table are dedicated I/Os and cannot be used otherwise. See the following table for detailed specifications:	

Item	Input Signal (pins 1/3/5)		Output Signal (pins 2/4)
I/O Type	DC digital input		Transistor, high-level output
I/O Mode	SOURCE		SOURCE
In./out. Voltage Class	24 V (–20% to +20%)	OFF voltage: > 5 V ON voltage: < 15 V	24 V (–20% to +20%)
ON response time	Less than 10 ms (hardware response time)		Less than 0.5 ms (hardware response time)
OFF response time	Less than 10 ms (hardware response time)		Less than 0.5 ms (hardware response time)
Isolation mode	Optocoupler isolation		Optocoupler isolation
Short circuit-proof output	N/A		Yes

7 Power supply terminal

24 V DC voltage input defined as follows:

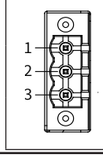

Terminal	No.	Name	Type	Function
	1	+24 V	Input	DC input positive
	2	0V	Input	DC input negative
	3	⏚	Grounding	PE

No.	Name	Function	Description
8	Grounding terminal	Controller grounding	Wing nut
9	DVI-D interface	Standard DVI-D Display interface	--

10/11 Ethernet port

4 LAN ports: LAN A, LAN B, LAN C and LAN D (top to bottom).

Four standard RJ-45 jacks are provided. The LED indicators are described as follows:

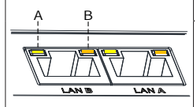

Indicator	Function	Color	State	Meaning
	A:Link/Act	Yellow		Off: No connection
				Blinking: Sending and receiving data
				On: Connected
	B:Speed	Green/ orange		Off: 1. connection at 10 Mbps 2. no connection
				On: Connection at 100 Mbps
				On: Connection at 1000 Mbps

Description:

Port	Function	Function
LAN A	Ethernet 1	1. System program commissioning 2. User program download and commissioning 3. MODBUS TCP protocol 4.Socket (TCP, UDP)
LAN B	Ethernet 2	1. MODBUS TCP protocol 2. Socket (TCP, UDP)
LAN C	EtherCAT1	1.EtherCAT protocol 2. supports auto scan 3. independent axis/IO
LAN D	EtherCAT2	1.EtherCAT protocol 2. supports auto scan 3. independent axis/IO

12/13 USB interface

The controller provides 4 USB interfaces, all of which support plug-and-play and hot plugging, and can connect up to 127 external devices. Two USB 2.0 and two USB 3.0. The interfaces conform to the USB EHCI, Rev. 2.0 standard. Pin definition is as below:

USB 2.0

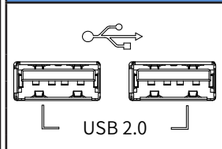

Pin	Signal Name	Function
1	VCC	Power
2	DATA-	USB2.0 differential data signal
3	DATA+	
4	GND	Power ground

USB 3.0

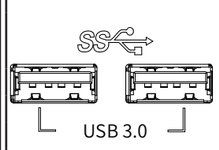

Pin	Signal Name	Function
1	VCC	Power
2	DATA-	USB2.0 differential data signal
3	DATA+	
4	GND	Power ground
5	SSRX-	HS reception DIFF data signal
6	SSRX+	
7	GND	Signal ground
8	SSTX-	HS transmission DIFF data signal
9	SSTX+	

No.	Name	Function	Description
14	Power button	The controller power button is located under the front panel of the controller. See the following for the details:	

No.	Operation	Result
1	Power-on	The controller is turned on
2	Pressing the button after power-on	No operation
3	Long pressing the button after power-on	The controller is shut down
4	Pressing the button after the controller is shut down but power is still on	The controller is turned on

■ Spare parts and options

No.	Name	Illustration	Description	Ordering code
1	RTC button battery CR2032	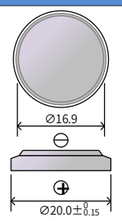	3 V, 230 mAh	09050002
2	Side earhook bracket	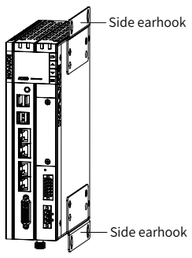	The booksize controller is installed through an earhook. A side earhook is available as an option for special scenarios.	20181483
3	UPS	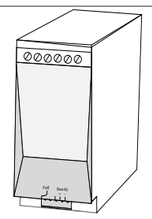	An external UPS is required for power failure retention. The controller supports Weidmüller's CP DC BUFFER 24 V 20 A.	72030012 (Part no.: 24 VDC BUFFER 5AS)
4	CAN expansion card	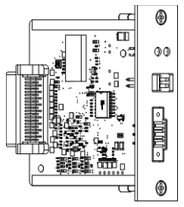	Two types of CAN expansion cards are available. One uses 4-pin pluggable terminals and the other uses RJ45 terminals. Both are used for CANopen communication between the controller and a stepper drive or AC drive at a rate of up to 1Mbps.	AC800-CAN1 - 01480011 AC800-CAN2 01480016

Mechanical Design Reference

■ Dimensions

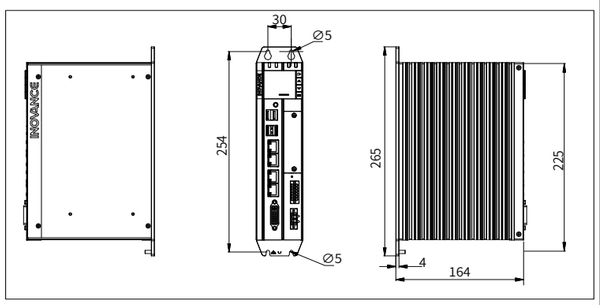

Figure 3 Controller dimensions (rear earhook) (in mm)

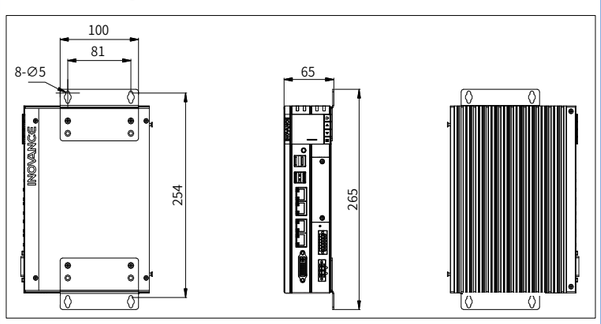

Figure 4 Controller dimensions (side earhook) (in mm)

Connection and Use

■ EtherCAT bus connection

1) EtherCAT specifications

EtherCAT bus specifications

Item	Specifications
Communication protocol	EtherCAT protocol
Service supported	CoE (PDO, SDO)
Min. sync period of 6-axis cam	1250 us (typical)
Max. synchronous jitter	±40 us
Synchronization mode	The servo adopts a DC-distributed clock and the IO module adopts input/output synchronization
Physical layer	100BASE-TX
Baud rate	100 Mbit/s (100Base-TX)
Duplex mode	Full duplex
Topology	Linear
Transmission medium	Network cables, see the Wring section
Transmission distance	Less than 100 m between two nodes
Number of slaves	Two EtherCAT ports, each supporting 128 slaves (axes up to 64)
EtherCAT frame length	44–1498 bytes
Process data	Max. 1486 bytes per Ethernet frame

2) Wiring

The controller provides a LANC/LAND port for EtherCAT bus communication. The cable must meet the following requirements:

ECT cable:

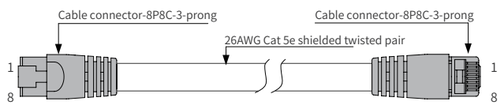

Figure 5 Requirements on the EtherCAT cable

● Signal pins

Pin	Signal (Ethernet 1000 Mbps)	Signal Direction	Signal Description
1	TD+	Output	Data transmission+
2	TD-	Output	Data transmission-
3	RD+	Input	Data reception+
4	--(DC+*)	--(bidirectional)	Not used (data C+)
5	--(DC-)	--(bidirectional)	Not used (data C+)
6	RD-	Input	Data reception–
7	--(DD+)	--(bidirectional)	Not used (data D+)
8	--(DD-)	--(bidirectional)	Not used (data D-)

Note: The definition of pins 4, 5, 7, and 8 under 1000 Mbps differs from that under 100 Mbps. Pay attention to the information in parentheses.

● Length requirements:

According to FastEthernet technology, when an EtherCAT bus is used, the length of the cable between the devices must not exceed 100 meters. Exceeding this length will attenuate the signal and affect communication.

● Technical requirements:

100% continuity test, no short circuit, open circuit, misalignment and poor contact. It is recommended to use the following cables:

Item	Specifications
Cable type	Flexible crossover cable, S-FTP, Cat 5e
Complied standards:	EIA/TIA568A, EN50173, ISO/IEC11801 EIA/TI Abulletin TSB, EIA/TIA SB40-A&TSB36
Conductor cross section	AWG26
Conductor type	Twisted pair
Pair	4

■ RS485 bus connection

1) Networking diagram

The RS485 bus topology is shown below. Using shielded twisted cables to connect CAN bus is recommended. Two 120 Ω termination resistors are attached to both ends of the bus to prevent signal reflection. Reliable single-point grounding is often used for shielded layers.

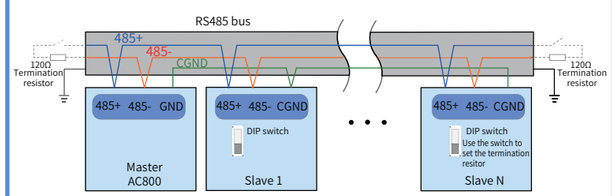

Figure 6 Diagram of RS485 communication connection

2) Terminal wiring

The controller provides three terminals (485+, 485- and GND) for RS485 communication. Ensure that the RS485 bus contains three cables, and the terminals are connected correctly.

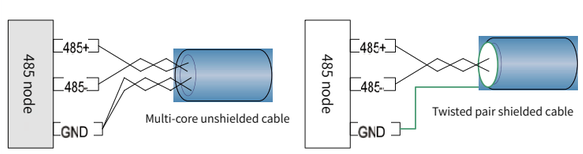

Figure 7 Terminal connection

■ Ethernet Connection for Monitoring

1) Networking diagram

With the Ethernet port, the controller can be connected point-to-point with devices such as a computer and HMI through an Ethernet cable

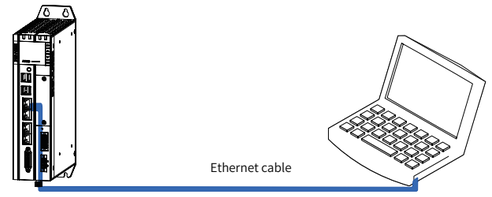

Figure 8 Connection between controller and PC

The CPU module can also be connected to a hub or switch, which is further connected with other network devices, through an Ethernet cable to achieve multi-point connection.

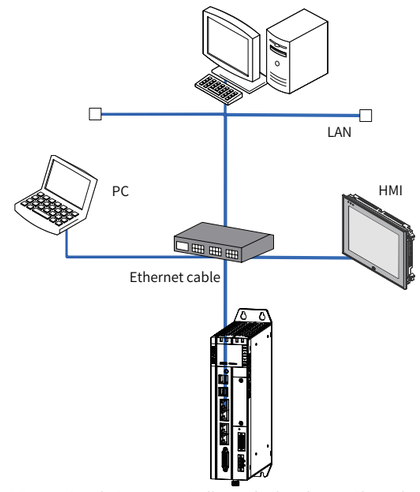

Figure 9 Connection between controller and other devices through a switch

2) Wiring

To improve communication reliability, the Ethernet cable must be Cat5 shielded twisted pair with an iron shelled connector.

■ Wiring of UPS and status I/Os

To enable power failure retention, a 24 VDC BUFFER 5AS UPS is required. The recommended wiring method for UPS and other I/O control signals is shown in the figure below:

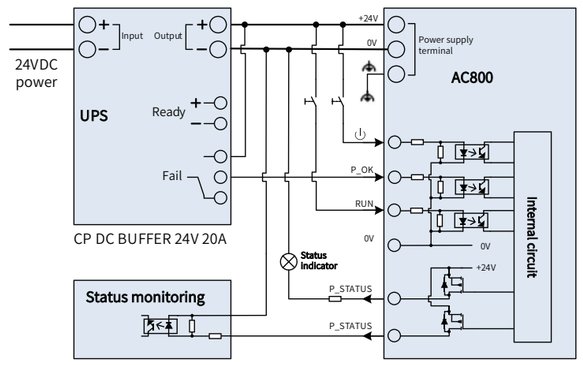

Figure 10 UPS connection

NOTE

- ◆ The UPS requires an external 24 V power supply. It is recommended to use a switched-mode power supply with a load capacity of 10 A and above;
- ◆ If the controller is powered on when the UPS Ready indicator is not completely off, it may not be started. In this case, you need to start the controller manually;
- ◆ When the UPS is connected, ensure that UPS Fail output is connected with the controller after power-on, otherwise the controller will be shut down.

Programming tool download

Inovance provides InoProShop as the user programming tool for AC802 Series intelligent machine controllers. It is free and you can obtain a DVD copy from our distributors or download it from our website www.inovance.com, where you can also download documents about AC800 series PLC products and their applications.

Due to the continuous improvement of products and information by the company, you are recommended to timely update the software and related documents.

■ Programming Environment and Software Installation

Environmental requirements

Hardware: A PC running Windows 7 or 10 (x64 is recommended), with 4 GB RAM and a hard disk or SSD with more than 5 GB free space. To ensure performance, the CPU frequency should be above 2 GHz.

The PC can be connected with the controller through a LAN cable. It is recommended to use a router between the PC and controller. That allows for longer distance and faster communication speed between them, and you can sit in your office and program the controller running in the workshop, for example. Therefore, a free LAN network port in the local network and a network cable are required.

Installation

1) Grounding of the housing

A ground point is set on the power terminal of the controller and the rear earhook. Choose one of the grounding points as needed, and ground the controller with a grounding wire that is as thick and short as possible (less than 30 cm). It is recommended to use the grounding point on the rear earhook as possible.

A wing nut is used for grounding, with a tightening torque of 0.55–0.8 N · m:

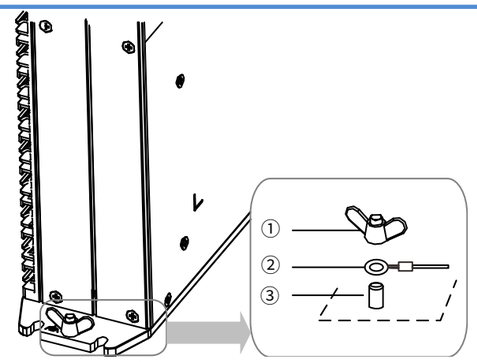

1-wing nut; 2-grounding cable; 3-Grounding screw

Figure 11 Grounding diagram

NOTE

- ◆ Ensure that the wing nut is tightened to the required torque;
- ◆ For your safety, ensure that the grounding is correct and reliable.

2) Installation space

To facilitate ventilation and module replacement, keep enough space between the module and its surroundings.

Installation diagram

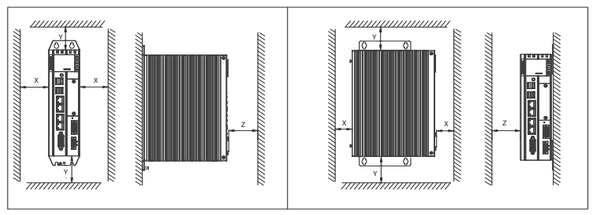

Rear earhook bracket installation Side earhook bracket installation

Figure 12 Installation space for booksize controller

Direction	Min. dimension requirements (mm)
X	50
Y	100
Z	50

3) Installation methods

The booksize controller can be installed through a rear earhook (booksize) or a side earhook (wall-mounted) to be adapted to cabinets of different sizes. The controller must be tightened with four screws to a tightening torque of 1.2 N · m.

The controller is delivered with a rear earhook for booksize installation. The side earhook is optional for special occasions.

1) Rear earhook 2) Side earhook

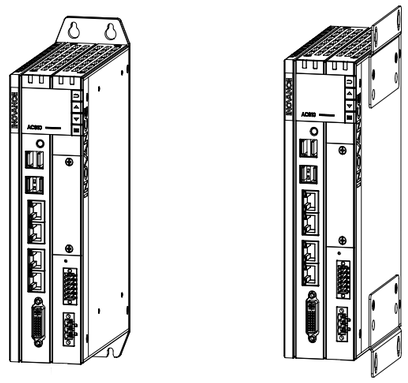

NOTE

- ◆ Before installation, ensure that the controller is powered off;
- ◆ For the hole size, see "Mechanical Design Reference";
- ◆ To avoid damage to the terminal and controller, tighten all fasteners to the specified torque.

INOVANCE Warranty Agreement

The warranty period of the product is 18 months (subject to information indicated by the barcode on the product). During the warranty period, if the product fails or is damaged under the condition of normal use by following the instructions, Inovance will be responsible for free maintenance.

Within the warranty period, maintenance will be charged for the damages due to the following causes:

1) Improper use or uninstallation/repair/modification without prior permission
2) Fire, flood, abnormal voltage, other disasters, and secondary disasters
3) Hardware damage caused by dropping or transportation after procurement
4) Failure to operate the product by observing the User Guide provided by Inovance
5) Faults and damages caused by factors outside of the product (such as peripheral devices)

The maintenance fee is charged according to the latest Maintenance Price List of Inovance.

The Product Warranty Card is not re-issued. Keep the card and present it to the maintenance personnel when seeking maintenance.

If there is any problem during the service, contact us or our agent directly.

You are assumed to agree on terms and conditions of this warranty agreement by purchase of the product. This agreement shall be interpreted by Suzhou Inovance Technology Co., Ltd.

Suzhou Inovance Technology Co., Ltd.
Address: No.16 Youxiang Road, Yuexi, Wuzhong District,
Suzhou 215104
Website: http://www.inovance.com