INOVANCE

H5U Series

Programmable Logic Controller User Guide

Suzhou Inovance Technology Co., Ltd.

Suzhou Inovance Technology Co., Ltd.

Address: No.16 Youxiang Road, Yuexi, Wuzhong District, Suzhou,

P.R.China 215104

Service line: 4000-300124

http://www.inovance.com

19011517A01

Preface

Introduction

Thank you for purchasing the H5U series programmable logic controller (PLC). It is a new-generation compact-sized PLC developed by Inovance, featuring EtherCAT bus control, FB/FC-based process encapsulation and reuse, and multilevel network communication through RS485, CAN, Ethernet, and EtherCAT ports.

This user guide describes the specifications, features, and usage of H5U. Before using this product, read this guide thoroughly to get familiar with the product features for safe use. Visit our website (www.inovance.com) for the latest version of the guide.

Intended Audience

This user guide is intended for electric engineers, software engineers, and system engineers who need to use or understand Inovance PLCs. If in doubt when using this product for the first time, contact the technical support personnel of Inovance to ensure correct use.

Initial Use

When using this product for the first time, read this user guide carefully.

Revision History

Date	Version	Description
Sept 2021	A01	Change part description and specification information.
June 2021	A00	Released the first version of this document.

Safety Instructions

■ Safety Precautions

1. Before installing, using, and maintaining this equipment, read the safety information and precautions thoroughly, and comply with them during operations.
2. To ensure the safety of humans and equipment, follow the signs on the equipment and all the safety instructions in this user guide.
3. The "CAUTION", "WARNING", and "DANGER" signs are only supplements to the safety precautions.
4. Use this equipment based on the designated environment requirements. Damage caused by improper usage is not covered by warranty.
5. Inovance shall take no responsibility for any personal injury or property damage caused by improper usage.

Safety Levels and Definitions

DANGER : Indicates that failure to comply with the notice may result in severe personal injury or even death.

WARNING : Indicates that failure to comply with the notice may result in severe personal injury or even death.

CAUTION : Indicates that failure to comply with the notice may result in minor or moderate personal injury or damage to the equipment.

Keep this user guide properly for reference when necessary and forward this guide to the end user.

Control System Design

WARNING

- External circuits must include an emergency stop circuit, a protective circuit, a forward/reverse operation interlocked circuit, and an upper position limit and lower position limit interlocked circuit (or reciprocating motion limit interlocked circuit) to prevent damage to the equipment.
- Provide a fault protection circuit outside the equipment to prevent unsafe accidental mechanical movement (for example, unexpected movement in the input/output control area that cannot be monitored by the equipment).
- A user program is required to protect the system when a display, control, communication, or power failure occurs on the equipment.
- When designing the system, ensure that a communication fault between the equipment and its main controller will not lead to equipment malfunction, which could result in personal injury or equipment damage.
- During operation, keep live objects away from the metal housing of the equipment.

CAUTION

- Do not set any switch on the touch screen that may result in personal injury or equipment damage. A separate switch is required for important operations to avoid accidents caused by abnormal output or faults.
- Do not set any touch switch on the equipment to control safe operations, such as an emergency stop. Use a dedicated physical switch instead. Failure to comply may result in severe personal injury or equipment damage.
- Do not use the equipment as an alarm device for serious accidents such as serious personal injury, equipment damage, or system shutdown. Use dedicated hardware and/or mechanical interlocks for designing important alarms and related control and trigger devices.

Installation

WARNING

- The equipment must only be used indoor. Ensure that the environment meets the requirements in the following "General Specifications" section.
- Keep the equipment away from strong magnetic fields, direct sunlight, high temperature, flammable gases, steam, and dust. Failure to comply may result in damage.
- Do not use the equipment in places with tremendous temperature fluctuation or high humidity. Failure to comply may result in condensation inside the equipment, causing equipment damage.
- Ensure that all cables are securely connected to the equipment. Loose connection may cause I/O signal errors.

CAUTION

- Install this product within the storage temperature range recommended by this user guide. Failure to comply may result in a display fault on the PLC.

Wiring

DANGER

- Before wiring, cut off all power supplies. Failure to comply may result in electric shock or circuit damage.
- Wire the DC power supply to the dedicated terminal as described in this guide.
- Prevent metal chippings and wire ends from dropping into the PLC during screw hole processing and wiring. Failure to comply may result in fire, faults, and malfunction.
- After wiring, check carefully to ensure that the operating voltage and the positions of terminals are correct. Failure to comply may result in fire or accidents.

☞ Grounding

Independent or single-point grounding is recommended, whereas common grounding is prohibited.

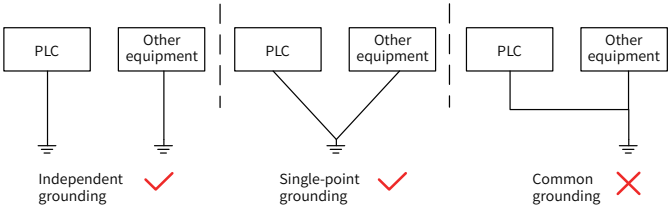

CAUTION

- Cut off the main power supply before connecting the power supply of the equipment. Failure to comply may result in electric shock.
- The input power of the equipment is DC 24V. Therefore, check regularly that the DC power provided by the switching-mode power supply unit is stable.

Operation and Maintenance

CAUTION

- During use, pay attention to PLC protection, perform touch operations by hand, and avoid touching the display panel by using tools. The user shall be responsible for panel damage caused by excessive external force.
- Lithium batteries and capacitors may contain ingredients that are harmful to health and pollute the environment. Treat scrapped controllers as industrial waste.
- Lithium batteries needs to be replaced by a professional.

☞ Safety Recommendations

- In positions where the operator directly contacts the machinery part, for example, where a machinery tool is loaded and unloaded or where a machine runs automatically, the onsite manual devices and any other alternative means must be carefully arranged and designed so that they are independent of the PLC and can start or terminate the automatic running of the system.
- If programs need to be modified when the system is running, apply a lock or take any other necessary measures to ensure that only authorized personnel can perform such modification.

Disposal

CAUTION

- Treat scrapped controllers as industrial waste. Dispose of the battery according to local laws and regulations.

1 Product Information

1.1 Model and Nameplate

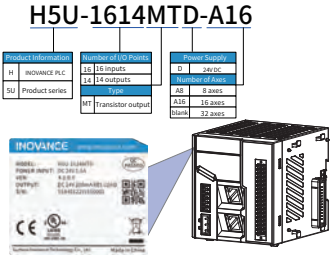

Figure 1 Model and nameplate

Model	Category	Description	Code
H5U-1614MTD	PLC	H5U series PLC with 16 inputs and 14 outputs (32-axis)	01440087
H5U-1614MTD-A16	PLC	H5U series PLC with 16 inputs and 14 outputs (16-axis)	01440235
H5U-1614MTD-A8	PLC	H5U series PLC with 16 inputs and 14 outputs (8-axis)	01440236
H5U-1614MTD-A8S	PLC	H5U series PLC with 16 inputs and 14 outputs (8-axis), No CAN and Cam	01440315

1.2 External Ports

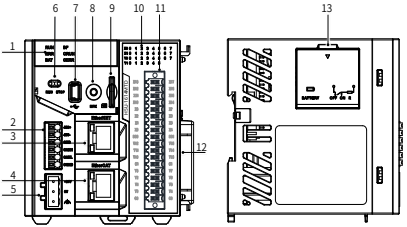

Figure 2 PLC ports

No.	Port Type	Port Identifier	Definition	Description
1	Operation status indicator	RUN	Current operation status of the system	ON when the system is running; OFF when the system is shut down.
		ERR	PLC system error	–
		BAT	Battery error	–
		BF	EtherCAT bus error	–
		CRUN	CAN running	–
		CERR	CAN error	–
2	RS485/CAN port	485+	RS485 communication signal+	Modbus RS485 and free communication protocol.
		485-	RS485 communication signal-	
		GND	RS485 communication ground	
		CANH	CAN communication signal+	CANopen/CANlink protocol.
		CANL	CAN communication signal-	
		CGND	CAN communication ground	
3	Ethernet port	EtherNET	RJ45 port for Ethernet communication	Modbus TCP/IP protocol.
4	EtherCAT port	EtherCAT	For EtherCAT communication	–
5	Power terminal	24 V	24 V DC power input	24 V DC voltage input.
		0 V	24 V DC power input	
		⏚	PE	
6	DIP switch	RUN/ STOP	For starting or stopping the master module	–
7	USB Port		For connecting a USB device	–
8	Multifunctional key	MFK	Key for resetting the IP address of the PLC	Valid when the PLC is in the STOP state.
9	microSD card slot	SD	microSD card holder for card insertion	User program download.
10	LED display	–	00: normal running 88: system error	Display the PLC RUN and error states, and cooperates with MFK to achieve special functions.

No.	Port Type	Port Identifier	Definition	Description
11	I/O terminal	–	16 inputs and 14 outputs	See the terminal layout description for details.
12	Module expansion port	–	For connecting an expansion module or device	16 I/O expansion modules are allowed at most without support for hot-swapping.
13	Battery/DIP switch holder	Battery	Spare battery installation Termination resistor installation	The spare battery and termination resistor can be installed in the holder.

1.3 General Specifications

Item	Specifications
Program data capacity	128K-step user programs 2-Mbyte customized variables, of which 256 Kbytes can be retained at power failure About 150K soft elements (those numbered after 1000 support retention at power failure)
Ethernet	Modbus TCP, Socket, program download and upload, and firmware upgrade EtherCAT
Number of axes	H5U-1614MTD: 32 axes, including EtherCAT (32 axes at most) and local pulses (4 axes at most) H5U-1614MTD-A16: 16 axes, including EtherCAT (16 axes at most) and local pulses (4 axes at most) H5U-1614MTD-A8: 8 axes, including EtherCAT (8 axes at most) and local pulses (4 axes at most) H5U-1614MTD-A8: 8 axes, including EtherCAT (8 axes at most) and local pulses (4 axes at most)
Serial communication	1 RS485 port
CAN communication	CANlink and CANopen
High-speed input	Four 200 kHz inputs
High-speed output	Four 200 kHz outputs
Expansion module	16 local expansion modules
Programming language	LD (FB/FC function) and SFC
USB and microSD card	User program upload and download, and firmware upgrade (the latter is not supported by USB)
Operating temperature	–10° C to +55° C

Item	Specifications
IP rating	IP20
Net Weight	0.46kg
Altitude	2000m
Pollution degree	2
Overvoltage	II

1.4 Input Specifications

Input signals can be bipolar voltages. The signal status is OFF when the absolute voltage value is less than 5.0 V; ON when the absolute voltage value is more than 15.0 V; and undefined when the absolute voltage value is in the range from 5.0 V to 15.0 V.

Item		High-speed Input (X0–X3)	Medium-speed Input (X4–X7)	General Input (X10–X17)
Signal Input Mode		Sink input when the SS0/SS1 terminal is short-circuited to 24 V; Source input when the SS0/SS1 terminal is short-circuited to 0 V		
Electrical properties	Input	DC 24V 1.5A		
	Input impedance	2 kΩ	3.3 kΩ	4.3 kΩ
	Input ON	Input current > 7.5 mA	Input current > 4.5 mA	Input current > 3.5 mA
	Input OFF	Input current < 2.5 mA	Input current < 1.5 mA	Input current < 1.5 mA
Filter	Digital filter	Digital filter setting supported for high-speed inputs (X0–X3) and medium-speed inputs (X4–X7)		
	Hardware filter	Hardware RC filter for general inputs (X10–X17), about 15 ms		
High-speed function		High-speed counting and interrupt at X0–X3, with the frequency 200 kHz		
Common terminal		2 common terminals: SS0 for X0–X3 (high-speed inputs) and SS1 for X4–X17 (medium-speed inputs and general inputs)		

NOTE

- The supply voltage must not exceed 26.4 V when all inputs are ON.
- The low-speed input filter time is conceptualized as the RC time.
- The response time is about 4 μs when medium-speed inputs are ON and about 35 μs when medium-speed inputs are OFF.

1.5 Output Specifications

The output ports use dry contact output, which is closed in the ON state and open in the OFF state.

Item		High-speed Output Port (Y0–Y7)	General Output Port (Y10–Y15)
Signal circuit supply voltage		5–24 V DC	
Output type		Transistor NPN output	
Circuit insulation		Optocoupler insulation	
Open-circuit leakage current		< 0.1 mA/30 V DC	
Min. load		12 mA for high-speed output above 10 kHz	5 mA
Max. output current	Resistive load	0.8A/4points,0.2A per point	0.8 A/4 points; 1.6 A/6 points
	Inductive load	7.2 W/24 V DC	12 W/24 V DC
ON response time		High-speed output (12 mA load): 1 μs	0.5 ms
OFF response time			
High-speed output frequency		Max. 200 kHz/channel	–
Output common terminal		One common terminal for each group; isolation of common terminals between groups	
Fuse		None	

The high-speed output circuit provides short circuit protection, namely, automatic output locking. Outputs can be unlocked in the OFF state.
The protection function can withstand 100 energy impacts per second.
Therefore, do not connect high-speed outputs to a capacitive load more than 10 μF to prevent the equipment damaged.

2 Mechanical Design Reference

■ Exterior and Dimensions

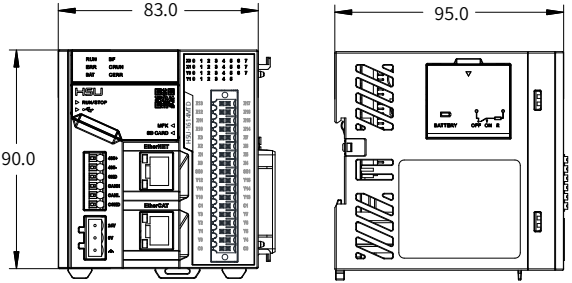

Figure 3 Exterior and dimensions (mm) of the PLC

3 Electrical Design Reference

3.1 Terminal Layout

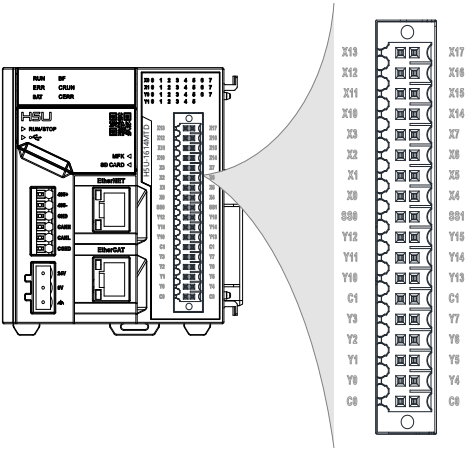

Figure 4 Terminal layout of the PLC

Definition	Terminal	Terminal	Definition
General input	X13	X17	General input
General input	X12	X16	General input
General input	X11	X15	General input
General input	X10	X14	General input
High-speed input	X3	X7	Medium-speed input
High-speed input	X2	X6	Medium-speed input
High-speed input	X1	X5	Medium-speed Input
High-speed input	X0	X4	Medium-speed input
High-speed input common terminal	SS0	SS1	General and high-speed input common terminal
General output	Y12	Y15	General output
General output	Y11	Y14	General output
General output	Y10	Y13	General output
General output common terminal	C1	C1	General output common terminal
High-speed output	Y3	Y7	High-speed output
High-speed output	Y2	Y6	High-speed output
High-speed output	Y1	Y5	High-speed output
High-speed output	Y0	Y4	High-speed output
High-speed output common terminal	C0	C0	High-speed output common terminal

NOTE

- The naming conventions for screenprint and labels of controller terminals differ. Their mapping may be defined, for example, label CH0-X0 = screenprint X0, label CH1-Y10 = screenprint Y10, and label COM0 = screenprint C0, with CH0 for channel 0 and CH1 for channel 1.
- Terminals of CH0 may distinguish between COM0 and SS0, and those of CH1 between COM1 and SS1. For example, CH0-Y0 corresponds to COM0, and CH0-X0 corresponds to SS0.
- SS0 is the common terminal for X0–X3 (high-speed inputs) of channel 0, and SS1 is the common terminal for X4–X17 (medium-speed inputs and general inputs) of channel 1.
- C0 is the common terminal for the Y0–Y7 output terminals of channel 0, and C1 is the common terminal for the Y10–Y15 output terminals of channel 1.

Wiring Precautions

1) The maximum length of the expansion cable for a high-speed I/O port must not exceed 3.0 m.
2) In the routing process, avoid bundling expansion cables with the power cable (of high voltage and current) and other cables that transmit strong interfering signals. Route expansion cables separately and avoid parallel routing.

3.2 Equivalent Circuits with General and High-speed Inputs

■ Wiring for Sinking and Sourcing Inputs

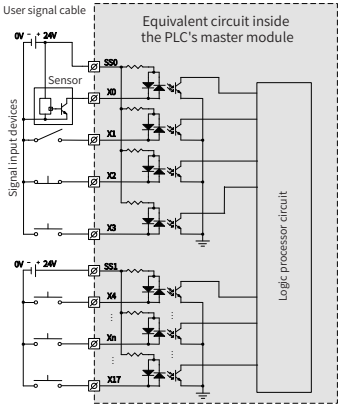

Wiring for sink input

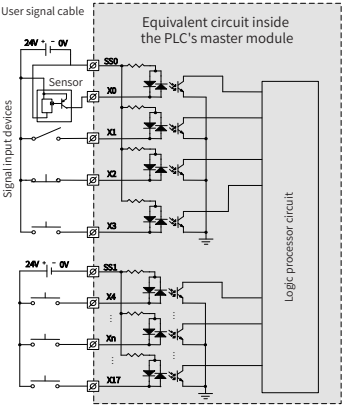

Wiring for source input

3.3 Equivalent Circuits with General and High-speed Output Transistors

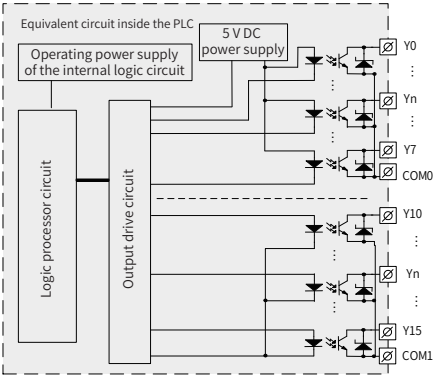

4 Communication Connection

4.1 Cable Selection and Preparation

Cable Type	Wire Material	Supporting Material	Cable Diameter		Terminal Torque	Cable Temperature
			mm^2	AWG		
Power cable	Cu	Tubular lug	0.5–1.5	24–16	5 in-lbs	75°C
Signal cable	Cu	Tubular lug	0.5–1.5	24–16	/	75°C

French version:

Type de câble	Matériel de fil	Matériau de support	Diamètre du câble		Couple terminal	Température du câble
			mm^2	AWG		
Câble d'alimentation	Cu	Cosse tubulaire	0.5–1.5	24–16	5 in-lbs	75°C
Câble de signalisation	Cu	Cosse tubulaire	0.5–1.5	24–16	/	75°C

Tube cable preparation procedure:

1) Remove the insulation of the cable so that a length of 11–14 mm of the conductor is exposed, and put the cable through a cable marking sleeve.
2) Insert the exposed end into the hole of the cable lug, and then crimp it with the recommended crimping tool.
3) Insert the cable lug into the stud terminal block and fasten it with a screwdriver, with a tightening torque not more than 5 in-lbs.

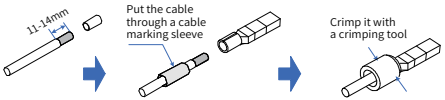

When the power cable, grounding cable, CAN cable, and RS485 cable use tube cables, a length of 6–10 mm of the conductor must be exposed. For other signal cables, the length must be 11–14 mm.

4.2 PLC Cable Connection

1) Communication connection

The PLC provides the CAN and RS485 ports.

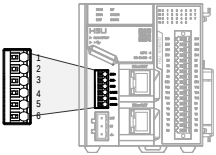

Figure 5 Communication ports of the PLC

The port pins are defined as follows.

Pin	Signal	Description
1	485+	RS485 differential pair positive signal of COM0
2	485-	RS485 differential pair negative signal of COM0
3	GND	Power ground of COM0
4	CANH	CAN Rx
5	CANL	CAN Tx
6	CGND	CAN ground end

Wiring

Select tube cables according to the instructions in the "Cable Selection and Preparation" section, and insert the tube cables into ports in accordance with the communication configuration.

2) RJ45 network cable connection

Hold and insert the connector into the RJ45 port of the communication module until a click sound is heard.

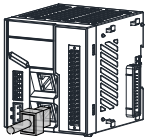

Figure 6 Network cable connection

Removal: Press the release tab of the connector and pull out the connector and module horizontally.

3) Requirements for securing communication cables

To prevent tension on the communication cables and ensure stable communication, fix the cables close to the equipment side before setting up EtherCAT and CANopen communication.

4.3 EtherCAT Bus Connection

1) EtherCAT Specifications

Item	Specifications
Communication protocol	EtherCAT protocol
Service supported	CoE (PDO and SDO)
Synchronization mode	Distributed clock (DC) used by the servo, with synchronized I/O
Physical layer	100BASE-TX
Baud rate	100 Mbit/s (100Base-TX)
Duplex mode	Full duplex
Topology	Linear topology
Transmission medium	Network cable (see the "Wring" section)
Transmission distance	< 100 m between nodes
Number of slave stations	72 at most
EtherCAT frame length	44–1,498 bytes
Process data	Max. 1,486 bytes/Ethernet frame

2) Wiring

The PLC can use the CN4 port for EtherCAT bus communication. The following network cable is required:

- Requirements on the EtherCAT network cable:

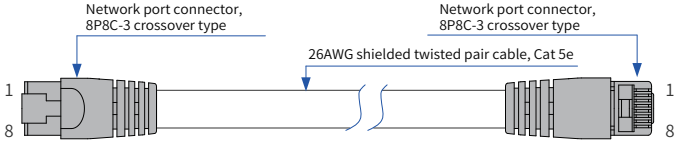

Figure 7 Preparation of the EtherCAT network cable

- Signal pins

Pin	Signal	Signal Direction	Signal Description
1	TD+	Output	Data transmission+
2	TD-	Output	Data transmission-
3	RD+	Input	Data reception+
4	–	–	Not used
5	–	–	Not used
6	RD-	Input	Data reception-
7	–	–	Not used
8	–	–	Not used

- Length requirements:

  FastEthernet has proved that the cable length between devices should not exceed 100 m in the case of an EtherCAT bus. A longer cable will result in signal attenuation that affects communication.

- Technical requirements:

  Continuity testing is conducted on a 100% basis and no short circuits, open circuits, and poor contact are found. The following cable specifications are recommended:

Item	Specifications
Cable type	Flexible crossover cable, S-FTP, Cat 5e
Complied standards:	EIA/TIA568A, EN50173, ISO/IEC11801 EIA/TI Abulletin TSB, EIA/TIA SB40-A&TSB36
Conductor cross section	AWG26
Conductor type	Twisted pair
Pair	4

4.4 Termination Resistor DIP Switch for Communication

The termination resistor DIP switch for communication is located inside the battery compartment. ON indicates that the termination resistors are activated (all toggles are set to OFF by default). As shown in the following figure, toggles 1 and 2 are used for RS485 communication, and 3 and 4 for CAN communication.

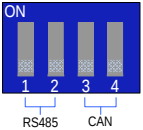

4.5 CANopen/CANlink Bus Connection

When building a CAN network, connect each of the three cables leading out from each device to the corresponding cable of the adjacent device. Add a 120 Ω CAN bus termination resistor at both ends of the bus. You can use a DIP switch to choose whether to activate the H5U series built-in resistor. The following figure shows the CAN bus connection topology.

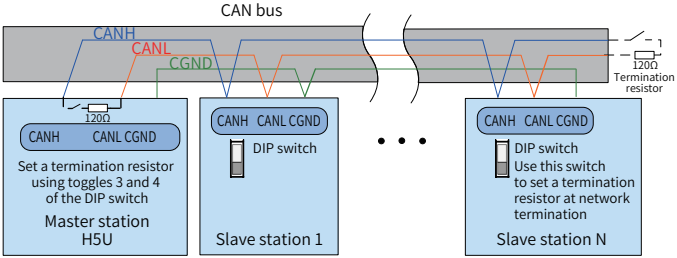

Figure 8 CANopen/CANlink connection

The following table lists the relationship between CANopen transmission rate and transmission distance.

Baud Rate (bit/s)	Maximum Bus Length (m)
1 million	20
500,000	90
250,000	150
125,000	300
50,000	1,000

To prevent interference with communication signals, do not bundle the CAN bus with the AC power cable and high-voltage cables.

4.6 RS485 Serial Connection

The following figure shows the RS485 bus connection topology. It is recommended that the RS485 bus be shielded twisted pairs, with the 485+ and 485- terminals connected by the twisted pairs. Connect a 120 Ω termination resistor to each end of the bus to prevent signal reflection. Connect the reference grounds of the RS485 signals of all nodes together. Up to 31 nodes can be connected. The branch distance of every node must be less than 3 m.

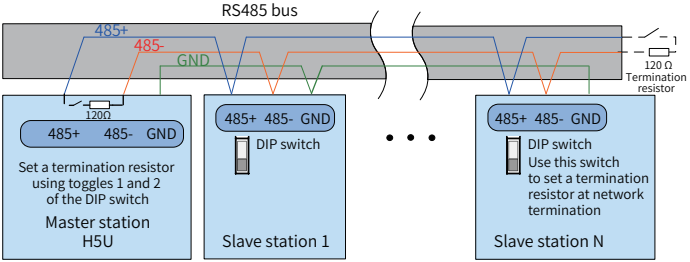

Figure 9 RS485 connection topology

4.7 Ethernet-based Monitor Connection

1) Network diagram

The PLC's Ethernet port can be connected to a hub or switch by an Ethernet cable and then to other network equipment for multi-point connection.

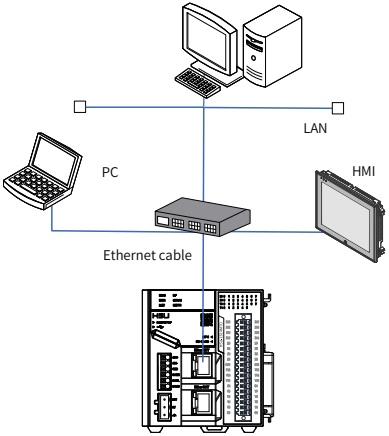

Figure 10 PLC connecting to other equipment through a switch

The PLC can also be connected to a PC or an HMI by an Ethernet cable in point-to-point mode.

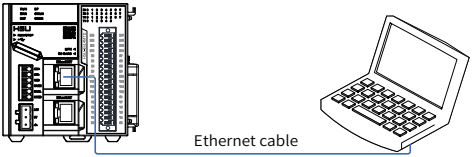

Figure 11 PLC-PC connection

2) Wiring

For stable communication, use Cat 5 shielded twisted pairs with a metal housing and injection molding as the Ethernet cable.

5 Operation and Maintenance

5.1 Start and Shutdown

After writing a program to the PLC, take the following steps to start or shut down the PLC.

After writing a program to the PLC in the STOP state, start the system as follows:

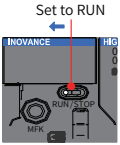

1. Set the RUN/STOP switch to RUN.

2. Check that the RUN indicator is steady ON in green.

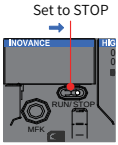

3. To stop the system, set the RUN/STOP switch to STOP. Alternatively, you can stop the system in the software tool of the host controller.

5.2 Spare Battery Maintenance

The PLC provides a spare battery for RTC timing.

1) The clock stops timing if no battery is installed or the battery is being discharged.
2) The maximum battery life is five years, depending on the specific use environment. Replace the battery once the battery level drops to zero.

- Battery replacement
  1) Set the PLC's RUN/STOP switch to STOP to cut off the power supply.
  2) Open the cover of the battery and DIP switch compartment, and take out the battery with a pair of tweezers or a proper jig.
  3) Push a new battery into the compartment and close the cover.
  4) Lithium batteries needs to be replaced by a professional.

NOTE

It is recommended that the battery be replaced while the power supply is connected. If the PLC has been powered off, insert a new battery within 30s after the old battery is removed to ensure correct RTC timing.

5.3 PLC Indicators

Indicator	Description	Indicator	Description
RUN indicator	Current operation status (RUN or STOP) of the system ON when the system is running; OFF when the system is shut down.	BF indicator	EtherCAT bus error
ERR indicator	System error	CRUN indicator	CAN running
BAT indicator	Battery error	CERR indicator	CAN error

5.4 MFK Key

The MFK button can be used with the LED to operate multiple function menu options. To do so, press and hold the MFK button, and the LED switches between various menu options at 2s intervals, as shown in the following figure. When the LED displays the target menu option, release the MFK button and then press it again for less than 2s to start the intended menu function.

If that menu function fails, the LED displays an error.

Error Code	Description	Error Code	Description
E1	The PLC is in an unsafe state (for example, running or downloading data) where operations are prohibited.	E4	The programmed file data is abnormal or the device model is incompatible.
E2	No microSD card or programmed file is detected.	E5	A password verification error has occurred.
E3	Multiple programmed files are detected in the microSD card.	-	-

5.5 Default IP Address Restoration

The default IP address of the CPU module is 192.168.1.88. If you have changed this IP address and forgot it when connecting the PLC to a PC, launch the **IP** menu option to restore the IP address to the default value.

After the **IP** menu function starts to run, the LED starts a countdown from 10.

The IP address is restored when the countdown reaches 0 and the new IP address will be applied. To cancel restoration, press the MFK button before the countdown reaches 0.

5.6 User Programming with a microSD Card

Save AutoShop-compiled files to the **PLCProgram** directory of the microSD card, and load the card to the PLC's master module. Launch the **Sd** menu option to download the user programs in the microSD card to the PLC. The LED displays the download progress (00–99). After download is completed, the LED displays "PP".

5.7 LED Display of the CPU Module

When a system error occurs, the CPU's LED displays "Er" and the error code alternately. For example, if the error code is 1501, the LED displays the following information:

INOVANCE Warranty Agreement

The warranty period of this product is 18 months, subject to the information of the product barcode. In the case of any special agreement, the warranty terms of the contract signed at the time of purchase shall prevail. During the warranty period, if the product fails or is damaged under normal use in compliance with the instructions, Inovance is responsible for free repair.

Within the warranty period, repair will be charged for damages due to the following causes:

1) Improper use, and unauthorized uninstallation, repair, and modification
2) Fire, flood, abnormal voltage, other disasters, and secondary disasters
3) Hardware damage caused by dropping or transportation after purchase
4) Failure to operate the product by observing the user guide provided by Inovance
5) Faults and damage caused by factors other than the product (for example, peripheral devices)

If product failure or damage occurs, correctly fill out the Product Warranty Card.

The repair fee is charged at the latest Repair Service Rates of Inovance.

The Product Warranty Card is not re-issued. Keep the card and present it to the repair engineer when seeking a fix.

If there is any problem during the service, contact us or our agent directly.

By purchasing this product, the customer is deemed to agree with the Warranty Agreement. This agreement shall be interpreted by Inovance.

INOVANCE Product Warranty Card

<table>
<tr><td rowspan="3">Customer Information</td><td colspan="2">Company address:</td></tr>
<tr><td rowspan="2">Company name:
Zip code:</td><td>Contact person:</td></tr>
<tr><td>Tel:</td></tr>
<tr><td rowspan="3">Product Information</td><td colspan="2">Product model:</td></tr>
<tr><td colspan="2">Product barcode (attached here):</td></tr>
<tr><td colspan="2">Agent name:</td></tr>
<tr><td>Failure Information</td><td colspan="2">(Time and items of repair):

Serviced by:</td></tr>
</table>