Ball Screw

Technical Data / SBC Precision Rolled Ball Screw /
DIN Standard SBC Precision Rolled Ball Screw /

Ball Screw

Technical Data

Ball Screw Features

A ball screw achieves high efficiency even if driving torque is low because balls roll between the screw shaft and ball nut to obtain a lower coefficient of friction than a leadscrew.

- Low Coefficient of Friction and High efficiency
- High Velocity and Acceleration.
- Long Service Life Time.

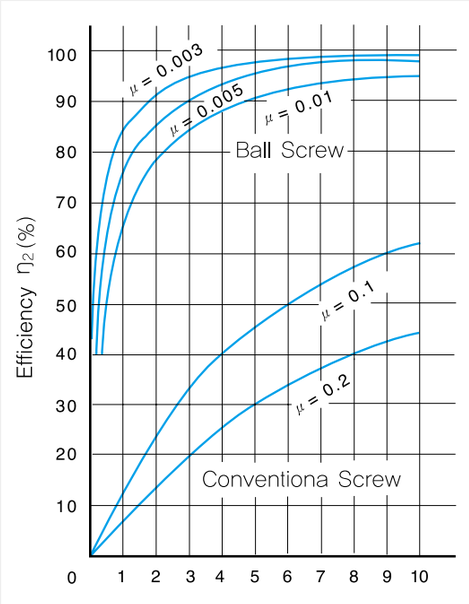

(Load Angle)

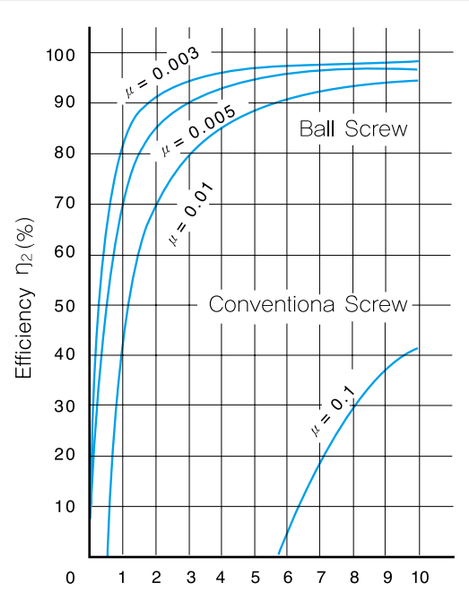

(Load Angle)

[Calculating the Lead Angle]

$$\tan\beta = \frac{L}{\pi \cdot dp}$$

β : Lead angle
L : Lead
dp : Ball circle diameter

Structures and Classification

The ball screw is composed of a screw, a nut and balls, Screws are classified by processing and Ball Nuts are classified by recirculation method.

1. Screw Shaft

1-1. Types by Manufacturing Method

There are 2 types, Rolled and Ground Screw Threads.

A rolled screw is manufactured by roll forming a thread form into a rod. A Ground screw is manufactured by grinding the thread form into a rod. Generally ground screws are much more precise and smooth.

1-2. Circular-arc groove and ball contact structures

Four-point and Two-point Contact Structure

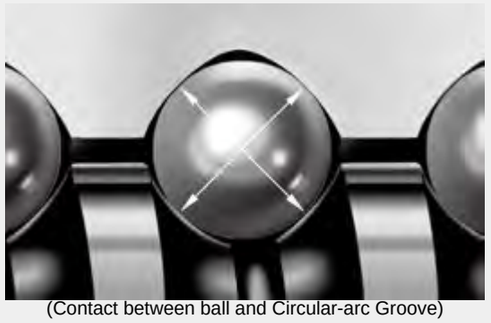

(Contact between ball and Circular-arc Groove)

Ball Screw

Technical Data

1-3. Structure of the Screw Shaft

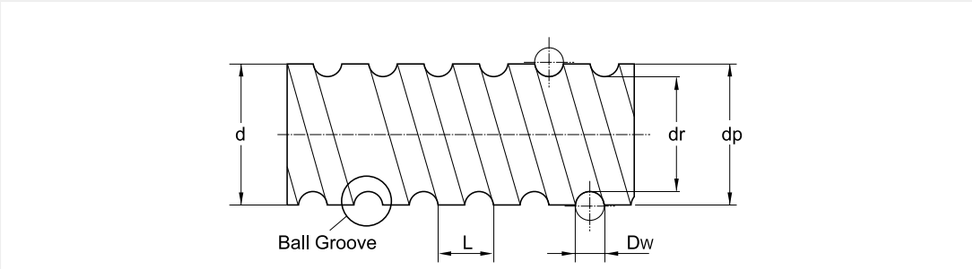

[Screw Diameter : d]

It means screw shaft outer diameter.

[Lead : L]

The amount of linear movement achieved by 1 revolution of screw movement.

[Ball Diameter : Dw]

Ball diameter.

[screw-shaft thread minor diameter : dr]

The diameter of the screw measured from the bottom of the thread form.

[Ball center-to-center diameter : dp]

The screw diameter measured from the center of balls rolling in the thread form. This number is necessary to calculate maximum permissible speed and lifetime.

2. Nuts

The nut is classified by Recirculation method.

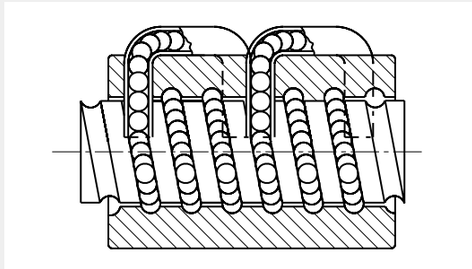

[Return Tube Type]

The most common type.

A return plate allows balls to recirculate.

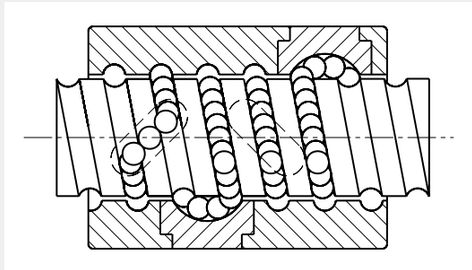

[Deflector Type]

Compact type, Easy to install

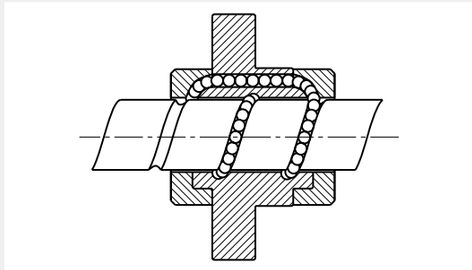

[End-cap Type]

These nut are suitable for long-lead type.

Balls are recirculating in an end-cap.

[Inner-recirculation Type]

Similar to End-cap type.

There is a passage of balls circulating inside of the nut and return piece allows balls to circulate. It is suitable for high-speed.

Ball Screw
Technical Data

Selecting a Ball screw

[Ball Screw Requirements]

- Orientation : Horizontal / Vertical
- Payload mass : m (kg)
- Linear Bearing Type : Rolling / Sliding
- Frictional coefficient of the Linear Bearing : μ
- Linear Bearing Resistance : f (N)
- External load in the axial direction : F (N)
- Support method of the screw shaft : fixed-free / fixed-supported / fixed-fixed
- Desired service life time : Lh (h)
- Stroke length : Ls (mm)
- Operating Speed : V_{max} (m/s)
- Acceleration time : t1 (sec)
- Constant velocity time : t2 (sec)
- Deceleration time : t3 (sec)
- Dwell time : td (sec)
- Acceleration : a (m/s^2)
- Acceleration distance : L1 (mm)
- Constant velocity distance : L2 (mm)
- Deceleration distance : L3 (mm)
- Number of revolutions per minute : n (min^{-1})
- Positioning accuracy : - (mm)
- Positioning repeatability : - (mm)
- Backlash : - (mm)

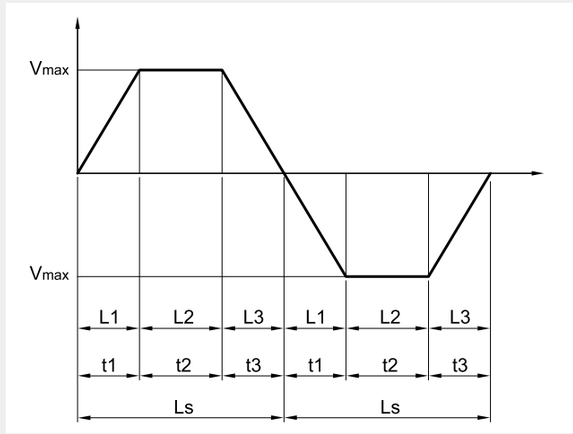

[Motor Requirements]

- Motor Type : AC servomotor / stepping motor, etc.
- The rated speed of the motor : - (min^{-1})
- Moment of Inertia of the motor : Jm ($kg.m^2$)
- Motor resolution : - (pulse / rev)
- Reduction ratio : A

※ References

1) Acceleration $a = \frac{V_{max}}{t1}$

2) Acceleration distance $L1 = \frac{V_{max} \times t1 \times 1000}{2}$

3) Even speed distance $L2 = V_{max} \times t2 \times 1000$

4) Deceleration distance $L3 = \frac{V_{max} \times t3 \times 1000}{2}$

Ball Screw
Technical Data

Lead Accuracy [JIS B1192 - 1997]

Accuracy grades C0 ~ C5 are described in the linearity and direction, and C7 ~ C10 in the travel distance error in relation to 300mm. By JIS (JIS B1192-1997)

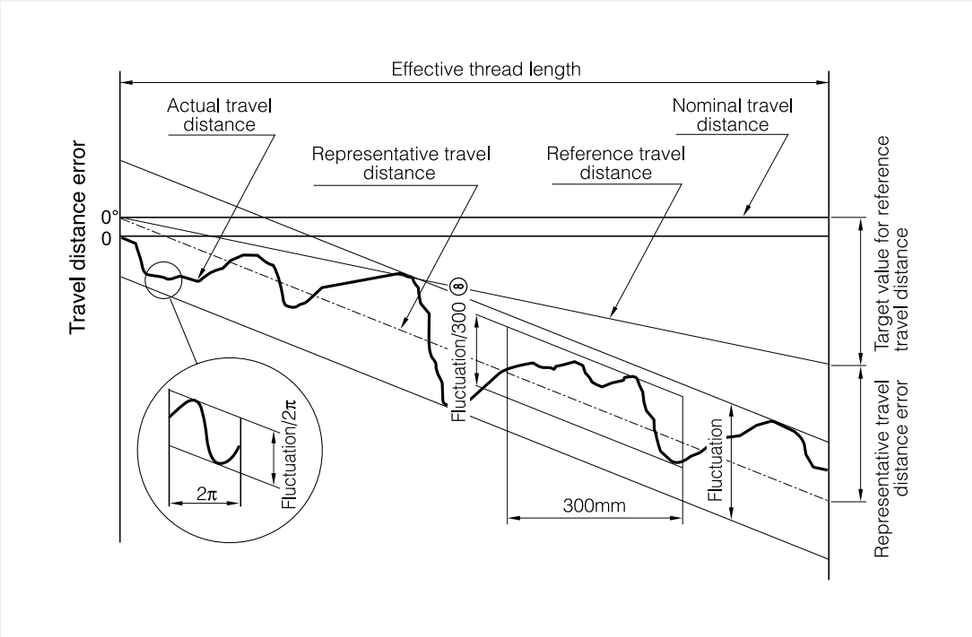

[Effective thread length]

The Effective Thread Length is the length of thread over which Errors are measured.

[Nominal travel distance]

The Nominal Travel Distance is the ideal travel of screw without errors.

[Reference Travel Distance]

Intended correcting value of the nominal travel distance in relation to the measured use.

[Actual Travel distance]

The actual measured travel distance

[Representative Travel Distance]

A straight line approximating the actual travel that is calculated by using the least squares method of the actual travel distance curve.

[Representative Travel Distance Error]

Difference between the representative travel distance and the reference travel distance.

[Fluctuation]

The maximum error of the actual travel measured as the distance between two straight lines drawn in parallel with the representative travel distance.

[Fluctuation / 300]

Deviation of travel from representative over a given thread length (300mm)

[Fluctuation / 2π]

Deviation of travel from representative over one rotation of the screw shaft.

[Target Value for Reference Travel Distance]

Indicating a target value for the reference travel distance.

Ball Screw

Technical Data

[Permissible Lead Accuracy Errors]

(Unit : ㎛)

Thread Length (mm)		Precision Grade													
		C0		C1		C2		C3		C5		C7		C10	
From	To	±E	e	±E	e	±E	e	±E	e	±E	e	±E	e	±E	e
–	100	3	3	3.5	5	5	7	8	8	18	18	±50/300		±210/300	
100	200	3.5	3	4.5	5	7	7	10	8	20	18				
200	315	4	3.5	6	5	8	7	12	8	23	18				
315	400	5	3.5	7	5	9	7	13	10	25	20				
400	500	6	4	8	5	10	7	15	10	27	20				
500	630	6	4	9	6	11	8	16	12	30	23				
630	800	7	5	10	7	13	9	18	13	35	25				
800	1000	8	6	11	8	15	10	21	15	40	27				
1000	1250	9	6	13	9	18	11	24	16	46	30				
1250	1600	11	7	15	10	21	13	29	18	54	35				
1600	2000	–	–	18	11	25	15	35	21	65	40				
2000	2500	–	–	22	13	30	18	41	24	77	46				
2500	3150	–	–	26	15	36	21	50	29	93	54				
3150	4000	–	–	30	18	44	25	60	35	115	65				
4000	5000	–	–	–	–	52	30	72	41	140	77				
5000	6300	–	–	–	–	65	36	90	50	170	93				
6300	8000	–	–	–	–	–	–	110	60	210	115				
8000	10000	–	–	–	–	–	–	–	–	260	140				

∗ ±E: Representative travel distance error ∗ e: Fluctuation

[Permissible Value of the Lead Accuracy]

(Unit : ㎛)

Fluctuation	C0	C1	C2	C3	C5	C7	C10
ν / 300	3.5	5	7	8	18	50	210
ν / 2π	2.5	4	5	6	8	–	–

Mounting Surface Accuracy

[Mounting Surface Accuracy C0]

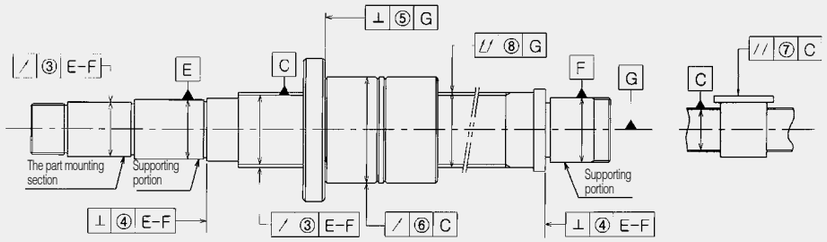

(Unit : ㎛)

Shaft outer diameter		③	④	Nut diameter		⑤	⑥	Reference length of mounting section		⑦
Above	Less			Above	Less			Above	Less	
-	8	3	2	-	20	5	5	-	50	5
8	12	4	2	20	32	5	6	50	100	7
12	20	4	2	32	50	6	7	100	200	-
20	32	5	2	50	80	7	8			
32	50	6	2	80	125	7	9			
50	80	7	3	125	160	8	10			
80	125	-	-	160	200	-	-			
				200	250	-	-			

Screw shaft length \ Screw shaft outer diameter		Above	-	8	12	20	32	50	80
		Less	8	12	20	32	50	80	125
Above	Less								
-	125		0.015	0.015	0.015				
125	200		0.025	0.020	0.020	0.015			
200	315		0.035	0.025	0.020	0.020			
315	400			0.035	0.025	0.020	0.015		
400	500			0.045	0.035	0.025	0.020		
500	630			0.050	0.040	0.030	0.020	0.015	
630	800				0.050	0.035	0.025	0.020	
800	1000				0.065	0.045	0.030	0.025	
1000	1250				0.085	0.055	0.040	0.030	
1250	1600				0.110	0.070	0.050	0.040	
1600	2000					0.095	0.065	0.045	
2000	2500								
2500	3150								
3150	4000								
4000	5000								
5000	6300								
6300	8000								
8000	10000								

Ball Screw

Technical Data

[Mounting Surface Accuracy C1]

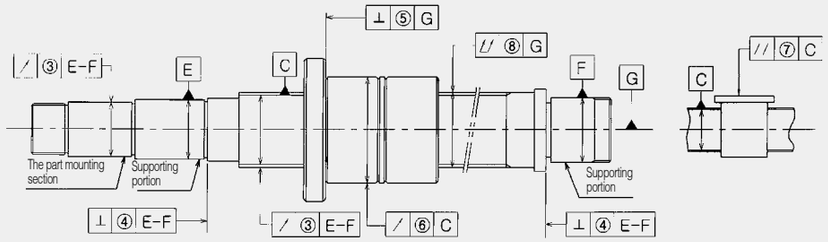

(Unit : μm)

Shaft outer diameter		③	④	Nut diameter		⑤	⑥	Reference length of mounting section		⑦
Above	Less			Above	Less			Above	Less	
–	8	5	3	–	20	6	6	–	50	6
8	12	5	3	20	32	6	7	50	100	8
12	20	6	3	32	50	7	8	100	200	10
20	32	7	3	50	80	8	10			
32	50	8	3	80	125	9	12			
50	80	9	4	125	160	10	13			
80	125	10	4	160	200	11	16			
				200	250	12	18			

⑧ Screw shaft outer diameter / Screw shaft length		Above	–	8	12	20	32	50	80
		Less	8	12	20	32	50	80	125
Above	Less								
-	125		0.020	0.020	0.015				
125	200		0.030	0.025	0.020	0.015			
200	315		0.040	0.030	0.025	0.020			
315	400		0.045	0.040	0.030	0.025	0.020		
400	500			0.050	0.040	0.030	0.025		
500	630			0.060	0.045	0.035	0.025	0.020	
630	800				0.060	0.040	0.030	0.025	
800	1000				0.075	0.055	0.040	0.030	0.025
1000	1250				0.095	0.065	0.045	0.035	0.030
1250	1600				0.130	0.085	0.060	0.045	0.035
1600	2000					0.120	0.080	0.055	0.040
2000	2500						0.100	0.070	0.050
2500	3150						0.130	0.090	0.060
3150	4000							0.120	0.080
4000	5000								
5000	6300								
6300	8000								
8000	10000								

[Mounting Surface Accuracy C2]

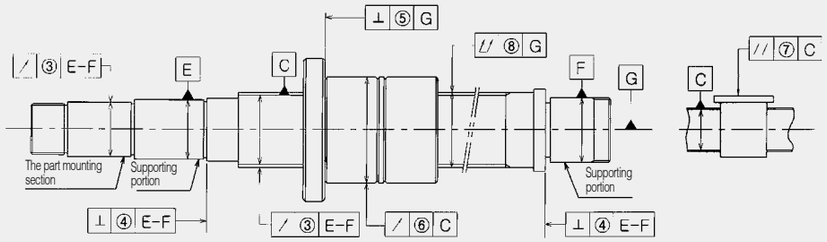

(Unit : μm)

Shaft outer diameter		③	④	Nut diameter		⑤	⑥	Reference length of mounting section		⑦
Above	Less			Above	Less			Above	Less	
–	8	7	4	–	20	7	8	–	50	7
8	12	7	4	20	32	7	9	50	100	9
12	20	8	4	32	50	8	10	100	200	12
20	32	9	4	50	80	9	13			
32	50	10	4	80	125	11	16			
50	80	11	5	125	160	12	18			
80	125	13	5	160	200	13	21			
				200	250	14	23			

⑧ Screw shaft outer diameter / Screw shaft length		Above	–	8	12	20	32	50	80
		Less	8	12	20	32	50	80	125
Above	Less								
–	125		0.023	0.023	0.018				
125	200		0.033	0.030	0.023	0.018			
200	315		0.045	0.035	0.028	0.025			
315	400		0.053	0.045	0.035	0.030	0.023		
400	500			0.058	0.045	0.035	0.028		
500	630			0.065	0.050	0.040	0.030	0.025	
630	800				0.065	0.050	0.035	0.030	
800	1000				0.085	0.060	0.045	0.035	0.028
1000	1250				0.110	0.075	0.055	0.040	0.033
1250	1600				0.145	0.100	0.070	0.050	0.038
1600	2000					0.130	0.090	0.065	0.045
2000	2500						0.110	0.080	0.055
2500	3150						0.145	0.100	0.070
3150	4000						0.200	0.135	0.090
4000	5000							0.180	0.115
5000	6300								
6300	8000								
8000	10000								

Ball Screw

Technical Data

[Mounting Surface Accuracy C3]

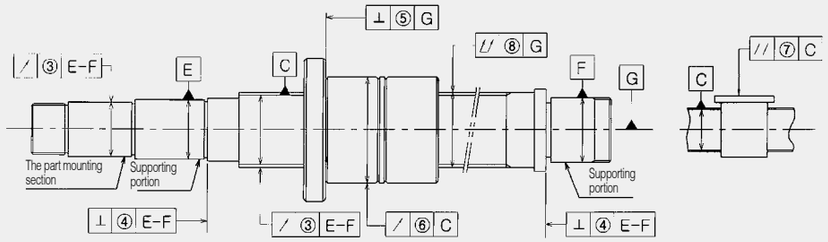

(Unit : ㎛)

Shaft outer diameter		③	④	Nut diameter		⑤	⑥	Reference length of mounting section		⑦
Above	Less			Above	Less			Above	Less	
–	8	8	4	–	20	8	9	–	50	8
8	12	8	4	20	32	8	10	50	100	10
12	20	9	4	32	50	8	12	100	200	13
20	32	10	4	50	80	10	15			
32	50	12	4	80	125	12	20			
50	80	13	5	125	160	13	22			
80	125	15	6	160	200	14	25			
				200	250	15	28			

⑧ Screw shaft length		Screw shaft outer diameter Above	–	8	12	20	32	50	80
		Less	8	12	20	32	50	80	125
Above	Less								
–	125		0.025	0.025	0.020				
125	200		0.035	0.035	0.025	0.020			
200	315		0.050	0.040	0.030	0.030			
315	400		0.060	0.050	0.040	0.035	0.025		
400	500			0.065	0.050	0.040	0.030		
500	630			0.070	0.055	0.045	0.035	0.030	
630	800				0.070	0.055	0.040	0.035	
800	1000				0.095	0.065	0.050	0.040	0.030
1000	1250				0.120	0.085	0.060	0.045	0.035
1250	1600				0.160	0.110	0.075	0.055	0.040
1600	2000					0.140	0.095	0.070	0.050
2000	2500						0.120	0.085	0.060
2500	3150						0.160	0.110	0.075
3150	4000						0.220	0.150	0.100
4000	5000							0.200	0.130
5000	6300								
6300	8000								
8000	10000								

[Mounting Surface Accuracy C5]

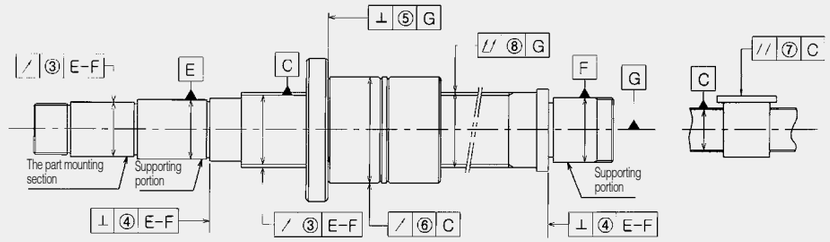

(Unit : ㎛)

Shaft outer diameter		③	④	Nut diameter		⑤	⑥	Reference length of mounting section		⑦
Above	Less			Above	Less			Above	Less	
–	8	10	5	–	20	10	12	–	50	10
8	12	11	5	20	32	10	12	50	100	13
12	20	12	5	32	50	11	15	100	200	17
20	32	13	5	50	80	13	19			
32	50	15	5	80	125	15	27			
50	80	17	7	125	160	17	30			
80	125	20	8	160	200	18	34			
				200	250	20	38			

⑧ Screw shaft length		Screw shaft outer diameter Above	–	8	12	20	32	50	80
		Less	8	12	20	32	50	80	125
Above	Less								
–	125		0.035	0.035	0.035				
125	200		0.050	0.040	0.040	0.035			
200	315		0.065	0.055	0.045	0.040			
315	400		0.075	0.065	0.055	0.045	0.035		
400	500			0.080	0.060	0.050	0.045		
500	630			0.090	0.075	0.060	0.050	0.040	
630	800				0.090	0.070	0.055	0.045	
800	1000				0.120	0.085	0.065	0.050	0.045
1000	1250				0.150	0.100	0.075	0.060	0.050
1250	1600				0.190	0.130	0.095	0.070	0.055
1600	2000					0.170	0.120	0.085	0.065
2000	2500						0.150	0.110	0.080
2500	3150						0.200	0.140	0.095
3150	4000						0.260	0.180	0.120
4000	5000							0.240	0.160
5000	6300							0.310	0.210
6300	8000								0.280
8000	10000								0.370

Ball Screw

Technical Data

[Mounting Surface Accuracy C7]

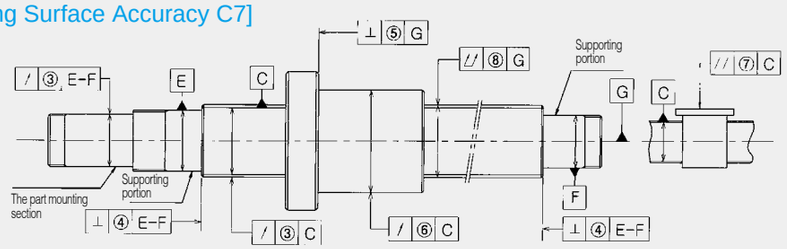

(Unit : ㎛)

Shaft outer diameter		③	④	Nut diameter		⑤	⑥	Reference length of mounting section		⑦
Above	Less			Above	Less			Above	Less	
–	8	14	7	–	18	14	20	–	50	17
8	12	14	7	8	30	14	20	50	100	17
12	20	14	7	30	50	18	30	100	200	30
20	32	20	7	50	80	18	30	200	400	30
32	50	20	8	80	120	20	40			
50	80	20	10	120	150	20	40			
80	125	30	11	150	180	25	50			
125	200	30	13	180	250	25	50			
				250	300	25	50			

⑧ Screw shaft outer diameter / Screw shaft length		Above	–	8	12	20	32	50	80	125
		Less	8	12	20	32	50	80	125	200
Above	Less									
–	125		0.060	0.055	0.055					
125	200		0.075	0.065	0.060	0.055				
200	315		0.100	0.080	0.070	0.060				
315	400			0.100	0.080	0.070	0.065			
400	500			0.120	0.095	0.080	0.070			
500	630			0.150	0.110	0.090	0.075	0.065		
630	800				0.140	0.100	0.085	0.070		
800	1000				0.170	0.130	0.100	0.080	0.070	
1000	1250				0.210	0.150	0.120	0.090	0.075	
1250	1600				0.270	0.190	0.140	0.110	0.085	0.070
1600	2000					0.250	0.180	0.130	0.100	0.080
2000	2500					0.320	0.220	0.160	0.120	0.090
2500	3150						0.280	0.200	0.140	0.110
3150	4000						0.380	0.260	0.180	0.130
4000	5000						0.510	0.340	0.230	0.160
5000	6300							0.440	0.300	0.200
6300	8000							0.600	0.400	0.270
8000	10000								0.530	0.350
10000	12500								0.700	0.460

[Mounting Surface Accuracy C10]

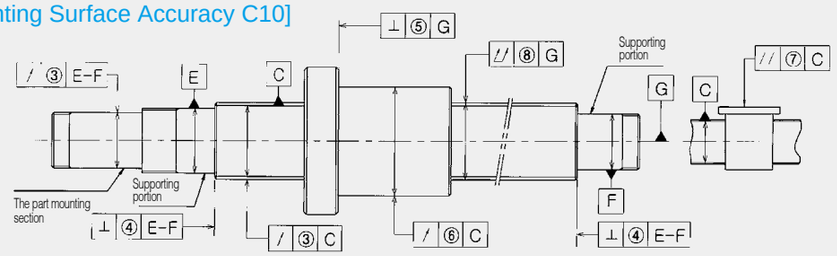

(Unit : ㎛)

Shaft outer diameter		③	④	Nut diameter		⑤	⑥	Reference length of mounting section		⑦
Above	Less			Above	Less			Above	Less	
–	8	40	10	–	18	20	40	–	50	30
8	12	40	10	8	30	20	40	50	100	30
12	20	40	10	30	50	30	60	100	200	50
20	32	60	10	50	80	30	60	200	400	50
32	50	60	12	80	120	40	80			
50	80	60	14	120	150	40	80			
80	125	80	16	150	180	50	100			
125	200	80	18	180	250	50	100			
				250	300	50	100			

⑧ Screw shaft outer diameter / Screw shaft length		Above	–	8	12	20	32	50	80	125
		Less	8	12	20	32	50	80	125	200
Above	Less									
–	125		0.100	0.095	0.090					
125	200		0.140	0.120	0.110	0.095				
200	315		0.201	0.160	0.130	0.110				
315	400			0.210	0.060	0.130	0.110			
400	500			0.270	0.200	0.160	0.130			
500	630			0.350	0.250	0.190	0.150	0.120		
630	800			0.460	0.320	0.230	0.170	0.140		
800	1000				0.420	0.300	0.220	0.170	0.130	
1000	1250				0.550	0.380	0.270	0.200	0.150	
1250	1600				0.730	0.500	0.340	0.250	0.180	0.150
1600	2000				1.000	0.690	0.460	0.320	0.230	0.180
2000	2500					0.930	0.610	0.420	0.290	0.210
2500	3150					1.300	0.820	0.550	0.380	0.270
3150	4000						1.100	0.750	0.500	0.340
4000	5000						1.600	1.000	0.680	0.460
5000	6300							1.400	0.920	0.600
6300	8000							2.000	1.300	0.830
8000	10000								1.800	1.100
10000	12500								2.500	1.600

Ball Screw

Technical Data

Lead Accuracy [DIN6905]

Lead accuracy according to DIN6905 standard is specified by tolerance classes which are P-Positioning Class Ball Screws and T-Transport Class Ball screws.

[P-Positioning Class Ball Screws]

Maximum error over useful length = $e_p+1/2V_{up}+C$

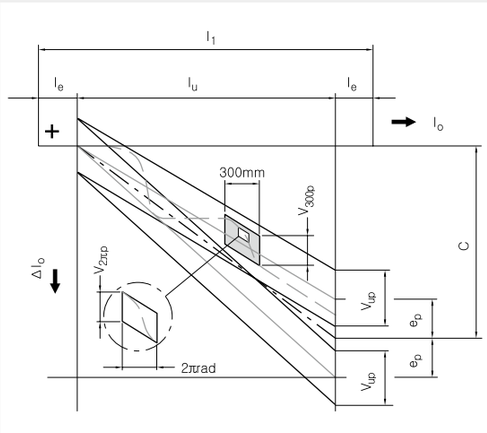

- l_o = Travel distance
- l_1 = Axial thread length
- Δl_o = The tolerance of travel distance
- l_u = Actual travel distance
- l_e = Exceed travel distance
- C = Compensation for actual travel distance (Standard: C=0)
- e_p = Tolerance on useful travel
- V_{up} = Permissible travel variation within useful travel l_u
- V_{300p} = Permissible travel variation within 300mm travel
- $V_{2\pi p}$ = Permissible travel variation within 2π travel

[T-Transport Class Ball Screws]

Maximum error over useful length = $e_p+1/2V_{up}+C$

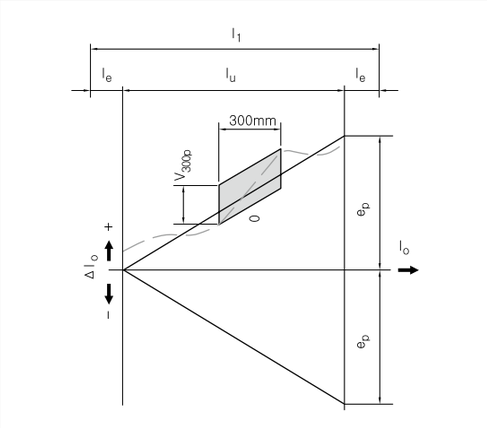

[Cumulative lead variation over usable length]

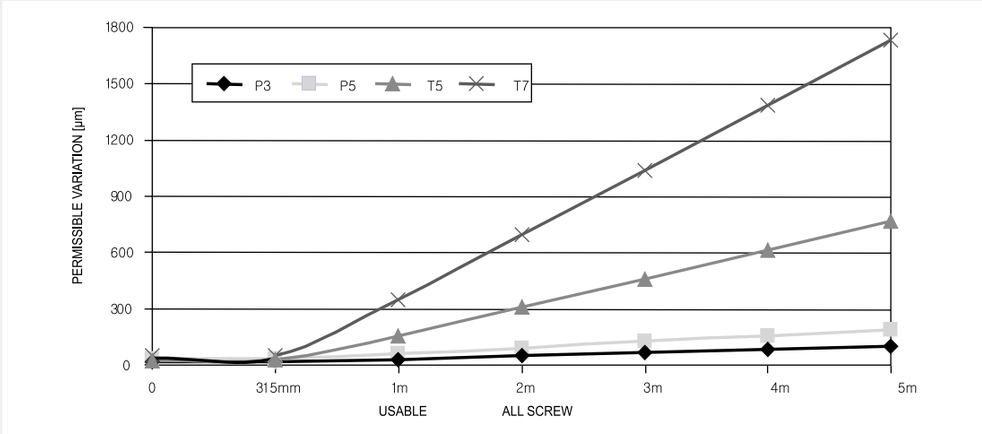

Tolerance Class	Lead Accuracy V_{300P}	Permissible cumulative travel variation over long distance															
		l_0	>	-	315	400	500	630	800	1000	1250	1600	2000	2500	3150	4000	5000
		(mm)	≤	315	400	500	630	800	1000	1250	1600	2000	2500	3150	4000	5000	6300
P3	±12μm/300mm	e_p(μm)		12	13	15	16	18	21	24	29	35	41	50	62	76	-
		V_{up}(μm)		12	12	13	14	16	17	19	22	25	29	34	41	49	-
P5	±23μm/300mm	e_p(μm)		23	25	27	30	35	40	46	54	65	77	93	115	140	170
		V_{up}(μm)		23	25	26	29	31	35	39	44	51	59	69	82	99	119
T5	±12μm/300mm	V_{up}(μm)		23	$=2xl_u/300xV_{300P}$												
T7	±52μm/300mm	V_{up}(μm)		52	$=2xl_u/300xV_{300P}$												

Ball Screw

Technical Data

Measuring the Mounting Surface Accuracy

Support the supporting part of the screw shaft with V blocks. Set a measuring instrument on the circumference of the screw shaft, and find the largest difference on the dial gauge at several points when turning the screw shaft by one rotation.

(1) Overall Radial Runout of the Screw Shaft Axis

Support the supporting part of the screw shaft with V blocks. Set a measuring instrument on the circumference of the screw shaft, and find the largest difference on the dial gauge at several points when turning the screw shaft by one rotation.

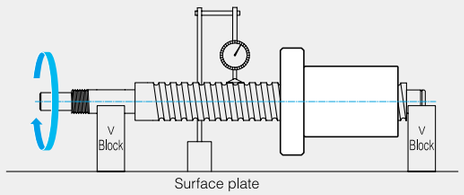

(2) Radial Runout of the Nut Circumference according to the screw shaft Axis

Support the thread of the screw shaft with V blocks near the nut. Set a measuring instrument on the circumstance of the nut, and find the largest difference on the dial gauge when turning only the nut by one rotation (without turning the screw shaft).

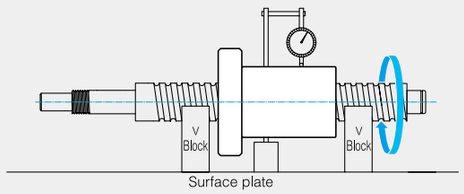

(3) Perpendicularity of the Flange Mounting Surface of the screw shaft to the screw shaft axis

Support the thread of the screw shaft with V blocks near the nut. Set a measuring instrument on the screw shaft's supporting portion end, and find the largest difference on the dial gauge when turning the screw shaft and the nut at the same time by one rotation at the same time.

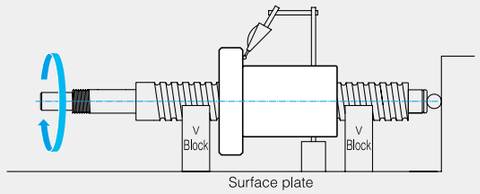

(4) Runout of the Part Mounting section according to the Screw shaft

Set a measuring instrument on the part mounting section, and find the largest difference on the dial gauge when turning the screw shaft by one rotation.

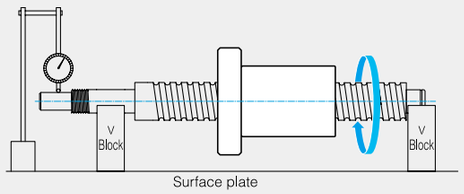

(5) Perpendicularity of the supporting portion End of the screw shaft to the supporting portion axis.

Set a measuring instrument on the screw shaft's supporting portion end, and read the largest difference on the dial gauge when turning the screw shaft by one rotation.

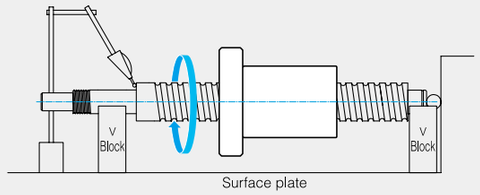

Ball Screw

Technical Data

Mounting Method

There four mounting methods for the Ball Screw. Select appropriate mounting method.

Permissible Axial load and numbers of rotation vary according to the mounting method.

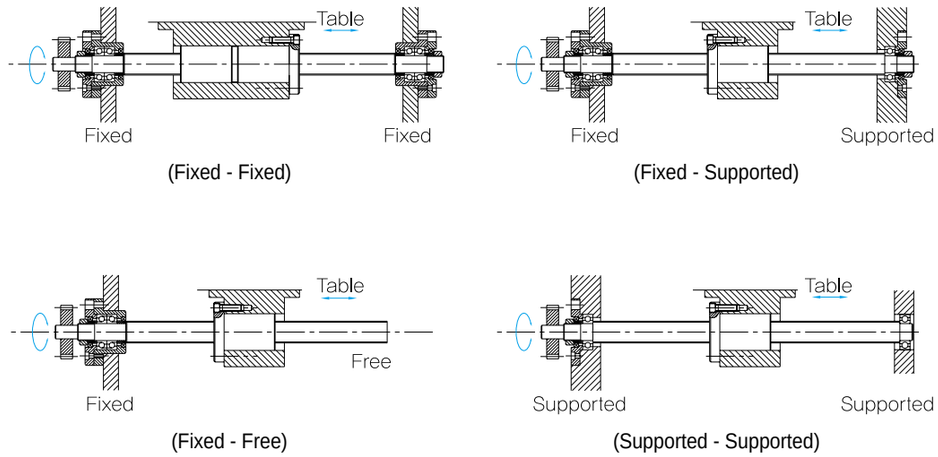

[Mounting Method Based on Conditions]

Mounting	Conditions
Fixed - Fixed	High load and speed, Long distance
Fixed - Supported	Medium load and speed, Normal distance
Fixed - Free	Medium load, low speed, Short distance
Supported - Supported	Low load and speed, Short distance

Ball Screw
Technical Data

Preload

In order to remove the axial clearance and minimize the displacement under an axial load.

For a highly accurate positioning, a preload is generally provided.

[Clearance]

For the Axial clearance, refer to the specifications.

Preload Torque

The preload Torque follows the JIS Standard (B 1192-1997).

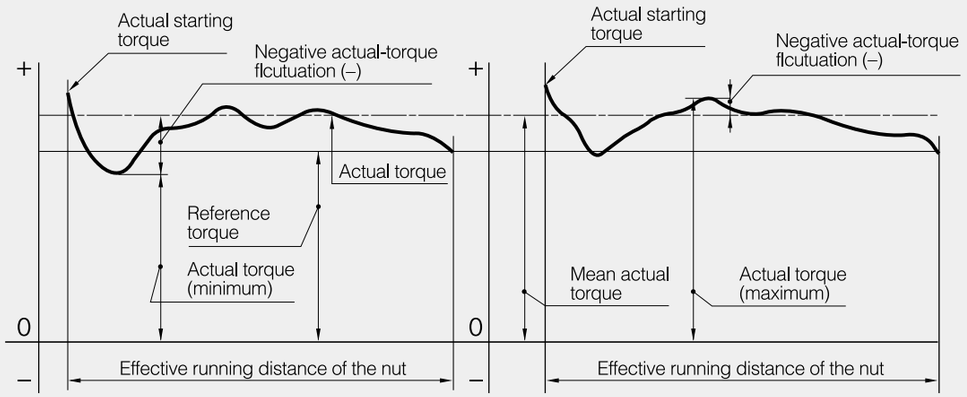

[Dynamic Preload Torque]

The torque necessary to rotate a screw shaft in a preloaded nut (without external load).

[Actual Torque]

Measured torque required to rotate a ball screw.

[Torque Fluctuation]

The variation of torque required to rotate a screw in a preloaded nut compared to the nominal torque.

[Reference Torque]

A dynamic preload torque set as a target.

[Calculating the Reference Torque]

Refer to an equation below.

$$Tp = 0.05(\tan\beta)^{-0.5}\ \frac{Fao \cdot L}{2\pi}$$

Tp : Reference torque (N.mm)
β : Lead angle
Fao : Applied preload (N)
L : Load (mm)

[Calculating the Torque Fluctuation]

Divide thread length by screw shaft outer diameter gives the torque fluctuation.

Tolerance range in torque fluctuation as the table below.

Reference torque N · mm		Effective thread length									
		4000m or less								Above 4,000m and 10,000m or less	
		Thread length / Screw shaft outer diameter ≤ 40				40 < Thread length / Screw shaft outer diameter < 60				-	
		Accuracy grades				Accuracy grades				Accuracy grades	
Above	Less	C0	C1	C2, C3	C5	C0	C1	C2, C3	C5	C2, C3	C5
200	400	±35%	±40%	±45%	±55%	±45%	±45%	±55%	±65%	-	-
400	600	±25%	±30%	±35%	±45%	±38%	±38%	±45%	±50%	-	-
600	1000	±20%	±25%	±30%	±35%	±30%	±30%	±35%	±40%	±40%	±45%
1000	2500	±15%	±20%	±25%	±30%	±25%	±25%	±30%	±35%	±35%	±40%
2500	6300	±10%	±15%	±20%	±25%	±20%	±20%	±25%	±30%	±30%	±35%
6300	10000	-	-	±15%	±20%	-	-	±20%	±25%	±25%	±30%

Ball Screw

Technical Data

[Example]

With a screw shaft length of 1500mm , shaft diameter of 31.6mm, ball circle diameter of 32mm, lead of 10mm, preload of 2000N, and Accuracy of C7, the preload torque is calculated as follows.

(1) Calculating the Reference Torque

$$\tan\beta = \frac{L}{\pi \cdot dp} = \frac{10}{\pi \cdot 32} = 0.0995$$

$$Tp = 0.05(\tan\beta)^{-0.5}\ \frac{Fao \cdot L}{2\pi}$$

$$= 0.05 \text{ X } (0.0995)^{-0.5}\ \frac{2000 \text{ X } 10}{2\pi}$$

$$= 504.8 \text{ N} \cdot \text{mm}$$

β : Lead angle
L : Lead (=10mm)
dp : Ball circle diameter (=32mm)
Fao : Preload (=2000N)
Tp : The reference torque

(2) Calculating the Torque Fluctuation

$$\frac{\text{Thread length}}{\text{Screw shaft outer diameter}} = \frac{1500}{31.6} = 47.4$$

The result is between 40 and 60, effective thread length, 4000mm or less and accuracy grade C5, the torque fluctuation is calculated as below.

$$504.8 \text{ X } (1 \pm 0.5) = 252.4 \sim 757.2 \text{N} \cdot \text{mm}$$

Permissible Axial Load

[Buckling Load on the Screw Shaft]

It is important to choose a screw shaft so that it will not buckle when the maximum axial load is applied.

$$\text{Buckling load (N)} = \frac{\eta_1 \cdot \pi \cdot E \cdot I}{La^2} \text{ X S}$$

$$= \eta_2 \frac{dr^4}{La^2} 10^4$$

La : Distance between two mounting surfaces (mm)
E : Young's modulus (2.06 x 10^5 N/mm^2)
dr : Radius of curvature of the screw shaft (mm)
S : Safety factor (Normal 0.5)

* I : Minimum geometrical moment of inertia of the shaft (mm^4)

$$I = \frac{\pi}{64} dr^4$$

Fixed - Free	: η_1 = 0.25	η_2 = 1.3
Fixed - Supported	: η_1 = 2	η_2 = 10
Fixed - Fixed	: η_1 = 4	η_2 = 20

[Permissible Tensile Compressive Load on the Screw shaft]

It is necessary to consider not only the buckling load but also the permissible tensile compressive load according to the yielding stress on the screw shaft.

$$\text{Permissible tensile compressive load (N)} = \sigma \frac{\pi}{4} dr^4 = 116 dr^2$$

σ : Permissible tensile compressive stress (147Mpa)
dr : Screw-shaft thread minor diameter (mm)

Ball Screw

Technical Data

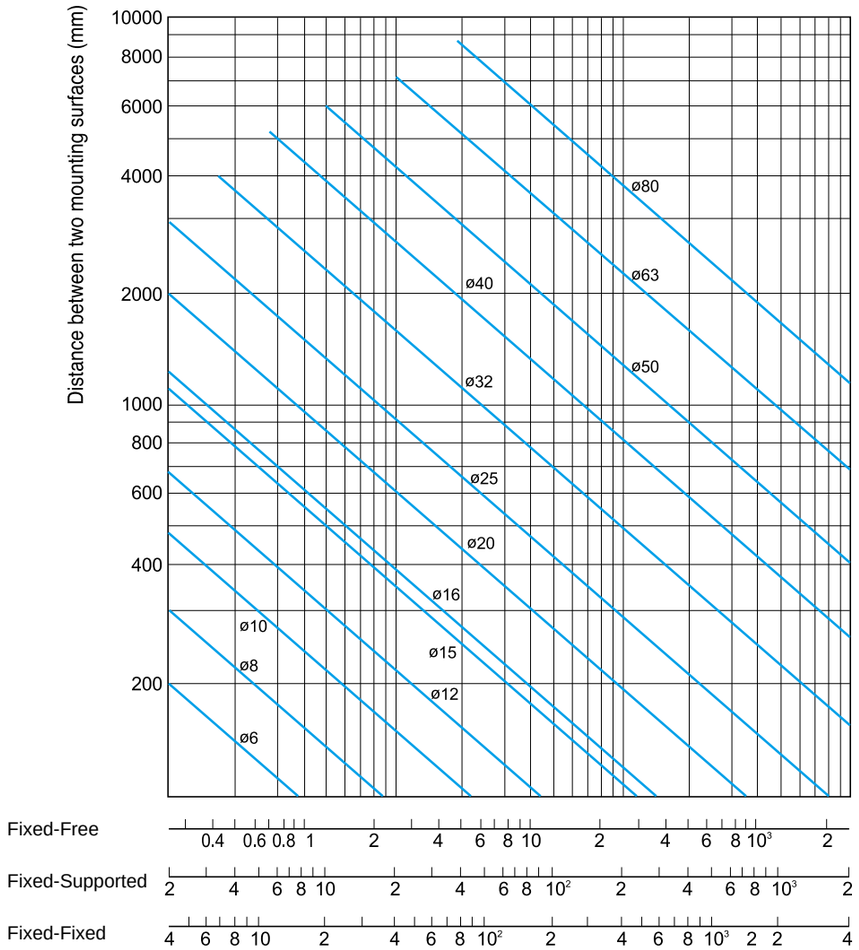

(Permissible tensile compressive load diagram)

Permissible Rotational Speed

[Critical Speed of the screw Shaft]

When the rotational speed increases, the ball screw might be unable to operate due to the screw shaft's natural frequency. It is important to use below the dangerous speed (resonance point)

$$\text{Dangerous speed}\,(\text{min}^{-1}) = \frac{60 \cdot \lambda_1^2}{2\pi \cdot La^2} \times \sqrt{\frac{E \times 10^3 \cdot I}{\gamma \cdot A}} \times S$$

$$= \lambda_2 \frac{dr^4}{La^2} \cdot 10^7$$

- La : Distance between two mounting surfaces (mm)
- E : Young's modulus (2.06 x 10^5 N/mm²)
- dr : screw-shaft thread minor diameter (mm)
- S : Safety factor (Normal 0.8)
- γ : Density (Specific gravity) (7.85 x 10^{-6} kg/mm³)

* I : Minimum geometrical moment of inertia of the shaft (mm⁴)

$$I = \frac{\pi}{64} dr^4$$

* A : Screw shaft cross-sectional area (mm²)

$$A = \frac{\pi}{4} dr^2$$

* λ_1, λ_2 : Factor according to the mounting method

Fixed - Free	: λ_1 = 1.875	λ_2 = 3.4
Supported - Supported	: λ_1 = 3.142	λ_2 = 9.7
Fixed - Supported	: λ_1 = 3.927	λ_2 = 15.1
Fixed - Fixed	: λ_1 = 4.73	λ_2 = 21.9

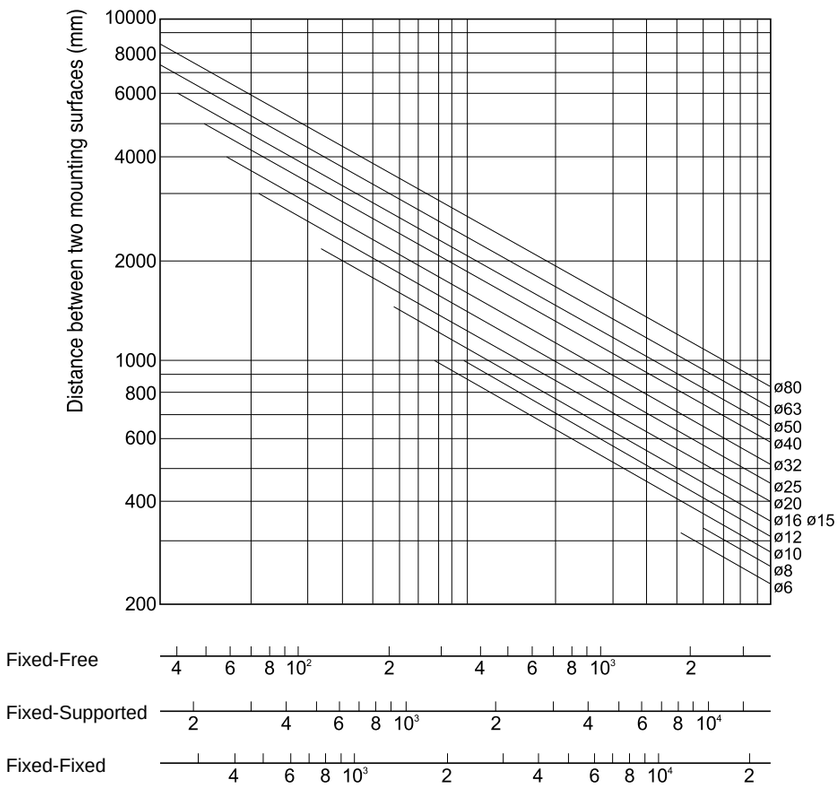

(Permissible tensile compressive load diagram)

DN Value

The DN Value is the ball circle diameter multiplied by the rpm (revolutions per minute) (min^{-1})

$$DN = D \times N$$

$$N(min^{-1}) = \frac{DN}{D}$$

N : Permissible rotational speed determined by the DN value (mm^{-1})

DN : DN coefficient
- : Precision Rolled ball screw : 90,000
- : Large Lead Rolled Ball Screw : 100,000
- : Ground Ball Screw : 70,000

D : Ball center-to-center diameter (mm)

Select the lesser value between critical speed and DN value for the maximum rotational speed.
Set “The maximum working Rotational speed < The Permissible Rotational speed ”
Please consider the following precautions.

(1) Exceeding the Critical Speed

- Exceeding the critical speed will cause the screw to shake and will generate excessive noise.
- The noise will increase when the nut is at either end of the screw shaft.
- The noise will decrease when the nut is in the middle of the screw shaft.

(2) Exceeding the DN Value

- Exceeding the DN Value speed will cause noise and vibration in the nut.
- Exceeding the DN Value speed can damage the recirculation parts of the nut (Deflector, Return tube, End-cap, Return plate).

Ball Screw

Technical Data

Basic load rating & lifetime

[Load rating & life]

Under normal conditions, the ball screw can be damaged by metal fatigue as the result of repeated stress. The repeated stress causes flaking of the raceways and steel balls. The life of ball screw is defined as the total number of rotations that the ball screw rotates until flaking occurs.

(1) Nominal life (total number of rotations): L

We define the nominal life as the total number of rotations (L=total number of rotations) without flaking by 90% of a group of an identical group of ball screws operating under the same condition.

$$L = \left(\frac{C_a}{F_a}\right)^3 \times 10^6$$

L : Nominal life (total number of rotations)
Fa : Applied axial load
Ca : Basic dynamic load rating

(2) Basic dynamic load rating : Ca (kN)

Basic dynamic load rating Ca is defined as load which is constant direction and volume, when operating one group of ball screw independently as L=106 under same condition.

(3) Basic static load rating : Coa (kN)

If an excessive load or shock is applied to the ball screw system in the static or dynamic state, permanent but local deformation can occur to the steel balls and raceway.

Calculating the axial load

[Horizontal installation]

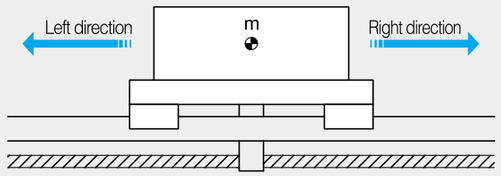

Axial load for left direction

Fa1(Acceleration : N) = μ · mg + f + ma
Fa2(Uniform motion : N) = μ · mg + f
Fa3(Deceleration : N) = μ · mg + f - ma

- m : Mass (kg)
- g : Acceleration of gravity (m/s^2)
- a : Acceleration and deceleration (m/s^2)
- μ : Frictional coefficient of the guide surface
- f : Guide surface resistance (N)

Axial load for right direction

Fa4(Acceleration : N) = μ · mg - f - ma
Fa5(Uniform motion : N) = μ · mg - f
Fa6(Deceleration : N) = μ · mg - f + ma

[Vertical installation]

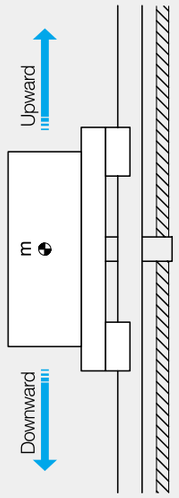

Axial load for upward

Fa1(Acceleration : N) = mg + f + ma
Fa2(Uniform motion : N) = mg + f
Fa3(Deceleration : N) = mg + f - ma

Axial load for downward

Fa4(Acceleration : N) = mg - f - ma
Fa5(Uniform motion : N) = mg - f
Fa6(Deceleration : N) = mg - f + ma

- m : Mass (kg)
- g : Acceleration of gravity (m/s^2)
- a : Acceleration and deceleration (m/s^2)
- f : Guide surface resistance (N)

Ball Screw

Technical Data

Static safety factor

There are two ways to select a ball screw. One depends on the value of static load and the other is based on the required life. Usually, the later is preferred.

$$F_{a\ max.} = \frac{C_{oa}}{f_s}$$

$F_{a\ max.}$: Max permissible axial load (kN)
C_{oa} : Basic static load rating (kN)
f_s : Safety factor

Applied machine	Load conditions	Lower limit of f_s
General industrial machinery	Without vibration or impact	1.0 ~ 1.3
	With vibration or impact	2.0 ~ 3.0
Machine tool	Without vibration or impact	1.0 ~ 1.5
	With vibration or impact	2.5 ~ 7.0

Checking life time

[Calculating the nominal life]

$$L = \left(\frac{C_a}{f_w \cdot F_a}\right)^3 \times 10^6$$

L : Nominal life (Total number of rotations) (rev)
Fa : Applied axial load (N)
Ca : Basic dynamic load rating (N)
fw : Load factors

Vibrations / Impact	Speed (V)	Load factor f_w
Faint	Very low V ≦ 0.25 m/s	1 ~ 1.2
Weak	Slow 0.25 < V ≦ 1.0 m/s	1.2 ~ 1.5
Medium	Medium 1.0 < V ≦ 2.0 m/s	1.5 ~ 2.0
Strong	High V > 2.0 m/s	2.0 ~ 3.5

[Calculating life time]

Life time (Total number of rotations) calculation is as below.

$$L_h = \frac{L}{60 \cdot N} = \frac{L \cdot P_h}{2 \cdot 60 \cdot n \cdot S}$$

- L_h : Life time (h)
- L : Nominal life (Total number of rotations) (rev)
- N : Rotations per minute (min^{-1})
- n : Number of reciprocations per minute (min^{-1})
- P_h : Ball screw lead (mm)
- S : Stroke (mm)

Ball Screw

Technical Data

[Calculating travel distance]

Calculating the travel distance is as below.

$$L_s = \frac{L \cdot Ph}{10^6}$$

Ls	:	Travel distance (km)
L	:	Nominal life (Total number of rotations) (rev)
Ph	:	Ball screw lead (mm)

[Calculating mean axial load]

The mean axial load is a constant load that is equivalent to nominal life in varying the load conditions. If the load changes in stages, the mean axial load is as below.

$$F_m = \sqrt{\frac{(F_{a1}^6 L_1 + F_{a2}^3 L_2 + \dots + F_{an}^3 L_n)}{L}}$$

- F_m : Mean axial load (N)
- F_{an} : Varying load (N)
- L : Total travel distance
- L_n : Distance travel under load in stages

Checking the rotational torque

The rotational torque can be calculated by below equation.

[During uniform]

Tt = T1 + T2 +T4

- Tt : Rotational torque for uniform motion (N.mm)
- T1 : Frictional torque by external load (N.mm)
- T2 : Preload torque by ball screw (N.mm)
- T4 : Other torque (N.mm)
  (Frictional torque by support unit or oil seal)

[During acceleration]

Tk = Tt + T3

- Tk : Rotational torque for acceleration (N.mm)
- Tt : Torque for uniform (N.mm)
- T3 : Torque for acceleration (N.mm)

[During deceleration]

Tg = Tt - T3

- Tg : Rotational torque for deceleration (N.mm)
- Tt : Torque for uniform (N.mm)
- T3 : Torque for deceleration (N.mm)

❶ Frictional torque by external load

In case turning force for ball screw, Frictional torque by external load can be calculated as below.

$$T1 = \frac{Fa \cdot Ph}{2\pi \cdot \eta} \times A$$

T1	:	Frictional torque by external load (N.mm)
Fa	:	Axial load (N)
Ph	:	Ball screw lead (mm)
η	:	Ball screw efficiency (Normal: 0.9~0.95)
A	:	Reduction ratio

❷ Frictional torque by ball screw preload

$$T2 = Td \times A$$

- T2 : Preload torque of ball screw (N·mm)
- Td : Preload torque of ball screw (※ See the preload page)
- A : Reduction ratio

❸ Torque for acceleration

$$T3 = J \times \omega \times 10^3$$

- T3 : Torque for acceleration (N·mm)
- J : Inertia moment (kg.m²)
- ω : Angular acceleration (rad/s²)

* Equation of inertia moment (J)

$$J = m\left(\frac{Ph}{2\pi}\right)^2 \times A^2 \times 10^{-6} + J_S \cdot A^2 + J_A \cdot A^2 + J_B$$

- m : Mass (kg)
- Ph : Ball screw lead (mm)
- A : Reduction ratio
- Js : Inertia moment of the screw shaft (kg·m²)
- JA : Inertia moment of gear etc. which attached to screw shaft (kg·m²)
- JB : Inertia moment of gear etc. which attached to motor (kg·m²)

* Equation of angular acceleration (ω)

$$\omega = \frac{2\pi \cdot N}{60t}$$

- N : Motor rotations per minute (mm⁻¹)
- t : Acceleration time (sec)

* Inertial moment of a round object

$$J = \frac{m \cdot D^2}{8 \times 10^6}$$

- J : Inertial moment (kg·m²)
- m : Mass of a round object (kg)
- D : Screw shaft outer diameter (mm)

Selecting motor

[In case of using servomotor]

❶ Calculating rotational speed for motor

The required rotational speed for motor is as below.

$$N = \frac{V \times 1000 \times 60}{Ph} \times \frac{1}{A}$$

- N : Required rotational speed of the motor (min⁻¹)
- V : Feeding speed (m/s)
- Ph : Ball screw lead (mm)
- A : Reduction ratio

* The value for required rotational speed of the motor must be equal or below to the rated rotational speed of the motor

❷ Calculating resolution for motor

Calculating resolution for encoder and driver are as below.

$$R = \frac{Ph \cdot A}{S_{min}}$$

- R : Required resolution (p/rev)
- Ph : Ball screw lead (mm)
- A : Reduction ratio
- Smin : Minimum feed amount (mm)

❸ Calculating motor torque

The required torque for motor is various in accordance with acceleration, uniform and deceleration motion. See the page of rotational torque.

* Maximum torque
The required maximum torque for motor must be equal or lower to the pear torque of motor.

* Effective torque
Calculating effective torque is as below. The calculated value of effective torque must be equal or lower to rated torque of motor.

$$T_{rms} = \sqrt{\frac{(T1^2 \cdot t1 + T2^2 \cdot t2 + T3^2 \cdot t3)}{t}}$$

- Trms : Effective torque (N·mm)
- Tn : Fluctuating torque (N·mm)
- tn : Time for applying torque "Tn" (s)
- t : Cycle time (t1+t2+t3) (s)

* The value of effective torque must be equal or below to the rated torque of the motor

❹ Inertia Moment
The inertial moment required for the motor is as below

$$J_m = \frac{J}{C}$$

- Jm : Inertial moment required for the motor (kg·m²)
- C : Factor determined by the motor and the driver

* The inertial moment of the motor must be above to the inertial moment required for the motor.

Ball Screw

Technical Data

[In case of using a stepping motor]

❶ Calculating minimum step angle

Calculating step angle for motor and driver is as below.

$$\theta = \frac{360 \cdot S_{min}}{Ph \cdot A}$$

- θ : Required step angle for motor (°)
- S_{min} : Minimum feed amount/ per step (mm)
- Ph : Ball screw lead (mm)
- A : Reduction ratio

❷ Calculating pulse speed

Calculating pulse speed is as below.

$$f = \frac{V \times 1000}{S_{min}}$$

- f : Pulse speed (Hz)
- V : Feeding speed (m/s)
- S_{min} : Minimum feed amount (mm)

❸ Calculating motor torque

The required torque for motor is various in accordance with acceleration, uniform and deceleration motion. See the page of rotational torque.

[Cautions for selecting motor]

When calculating required torque and pulse speed for selecting motor, the applied capacity of motor should be doubled for safety.

Precautions when mounting ball screw

[Nut bracket design]

In case of deflector, return tube types have projected part on nut itself, therefore the nut bracket should be designed in accordance with nut type.

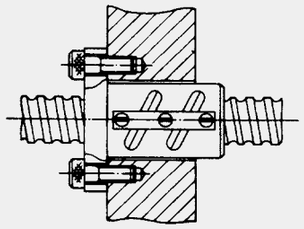

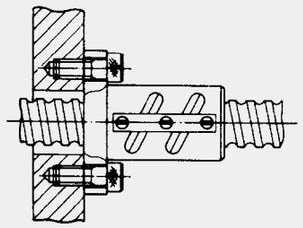

[End machining and designing nut environment]

When install the ball screw into machine, please avoid disassembling nut and screw type. Also, please install the components which prevent over-stroke of nut.

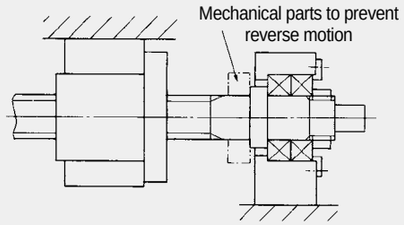

[When disassembling the nut from screw]

Please use temporary screw to put the nut during maintenance.

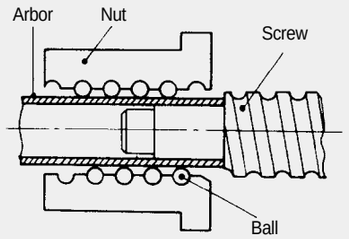

※ Cautions for disassembling the nut from screw

If there is mishandling while disassembling the nut from screw, it can cause the problem of nut position, preload, steel ball off and ball circulation part. Therefore, please contact SBC when you disassemble the nut from screw.

Safety Design

[Lubrication]

Lubrication for ball screw is a key part of its performance.

(1) Lubricants interval

The lubrication interval varies according to working conditions of the machine. Therefore, the following lubrication intervals are recommended. Also, mixed oil or grease feeding is not recommended.

Item	Checking time	Lubricant interval	Working condition and outcome	Volume of feeding
Grease	3 ~ 6 months	6 months~1 year	Normal condition	One third in nut space
Oil	1 week	According to checking	According to contamination and volume	Recommended volume according to screw diameter (see below)
	Everyday	Any time	According to volume of oil before use	

※ Recommended volume according to screw diameter

Screw diameter (mm)	Volume (cc)
4 ~ 15	0.05 / 3 min.
16 ~ 25	0.1 / 3 min.
32 ~ 40	0.2 / 3 min.
50 ~ 63	0.4 / 3 min.
80 ~ 100	0.5 / 3 min.

(2) Class of oil

Lubricant	Class
Oil	Turbine oil ISOVG32 ~ 68

(3) Classification and selection of lubrication

Lubricants for linear rail system must be selected after considering vibration, clean room, vacuum and working condition.

SBC supplies the two kinds of grease.

Item	Application	Brand [Company]
Normal working condition	Multipurpose industrial application	Shell Gadus S2 V100 3 [Korea shell]
Special working condition	Clean room	SNG 5050 [NTG Korea]
	Vibration	
	Wide temperature	

∗ Contact SBC if MSDS is required or a special purpose of grease is required.

- When planning to use a special lubricant, contact SBC before using it.
- When you use our produck in environment beyond the scope of use.

Ball Screw
Technical Data

Safety design for dust proof

Ball screws have recirculating steel balls inside. Debris and other foreign objects such as cutting chips can damage the nut. Typically a seal is a standard part of the nut but if it is not available, please consider another method of protecting the nut for debris such as bellows.

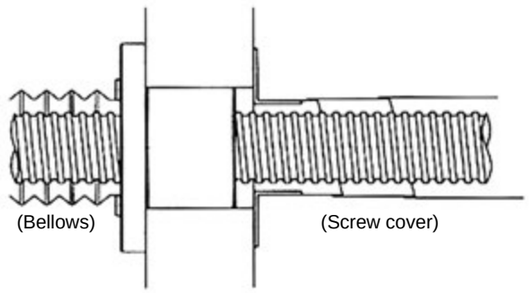

[Safety nut]

If the ball screw is vertically installed, a safety nut should be applied. This nut blocks the load in case the ball nut has been destroyed by excessive force.

(Installation of a safety nut)

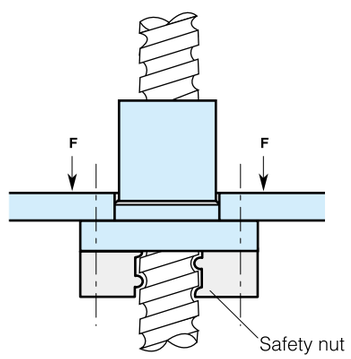

Anti-rust

2 types of surface treatment are available to prevent rust.

[AR-H : Raydent]

For corrosion resistance, raydent surface treatment is available. This treatment is suitable for corrosion resistance.

[AR-2F : Fluorocarbon raydent treatment]

Fluorocarbon coating on raydent-treatment is suitable where high corrosion resistance is required (water or salty water working condition).

※ Caution for surface treatment

❶ Use a higher safety factor for load life calculations when a surface treated ball screw system is selected.

❷ Except for the above surface treatments, other plating types usually cause performance problems.

❸ Contact SBC for surface treatments.

❹ Surface coating is not possible on some MBS nuts.
(Please check the page by model number)

Ball Screw

SBC Precision Rolled Ball Screw

SBC Precision Rolled Ball Screw

Type

SBC Precision Rolled Ball Screws are available in a variety of shaft diameters from Ø6mm to Ømm and a variety of Leads from 1mm to 40mm. Screws are available in P5 or T7 or both precision grades and lengths up to 7000mm depending on the particular screw.

STK Precision Rolled Ball Screw

SLK Long Lead Rolled Ball Screw

MBS Miniature Rolled Ball Screw

Ball Screw shaft Model No.

(Unit : mm)

Model No.	Diameter	Lead	Max. Length	Accuracy
RM0601T	06	01	900	T7
RM0801T	08	01	1200	T7
RM0802T	08	02	1200	T7
RM0802.5T	08	02.5	1200	T7
RM1204T	12	04	1400	T7
RM1205T	12	05	1400	T7
RM1210T	12	10	1400	T7
RM1520T	15	20	3000	T7
RM1605	15.6	05	3000	P5, T7
RM1610	15.9	10	3000	T7
RM1616	15.9	16	3000	T7
RM2005	19.6	05	4000	P5, T7
RM2010T	20	10	3000	T7
RM2020	19.6	20	4000	P5, T7
RM2505	24.6	05	6000	P5, T7
RM2510	24.6	10	6000	P5, T7
RM2525	24.6	25	6000	P5, T7
RM3205	31.6	05	6000	P5, T7
RM3210	31.6	10	6000	P5, T7
RM3220	32	20	6000	T7
RM3232	32	32	6000	T7
RM4005	39.6	05	6000	P5, T7
RM4010	39.6	10	6000	P5, T7
RM4020	39.6	20	6000	P5, T7
RM4040	39.6	40	6000	P5, T7
RM5010	49.5	10	6000	P5, T7
RM5020	49.5	20	6000	P5, T7
RM5050T	50	50	6000	T7
RM6310	62.5	10	6000	P5, T7
RM8010	79.5	10	7000	T7

※ SBC follows DIN and JIS Standards.

DIN Standard	JIS Standard
P5	C5
T7	C7

Ball Screw

SBC Precision Rolled Ball Screw

Ordering Example

[Nut Only Part Numbers]

32 20 SLK – S – KR
[1] [2] [3] [4] [5]

[1] Diameter
[2] Lead
[3] Nut Type : STK, SLK
[4] Preload : S (Clearance Type)
[5] Surface treatment : No symbol (standard), KR (Nut surface trearment)

※ MBS type must be ordered as a screw and nut assembly.
※ When ordering only a nut, the preload is only S type (Clearance type).

[Screw Shaft Only Part Numbers]

RM 3220T – 1500L – T7 – RR
[1] [2] [3] [4]

[1] Model No.
[2] Screw shaft length
[3] Accuracy
[4] Surface treatment : No symbol (standard), RR (Screw surface trearment)

※ Refer to the specifications for the Model No.
※ Individual screw shafts are only available in the T7 precision grade.
※ MBS type must be ordered as a screw and nut assembly.

[Nut and Screw Assembly Part Numbers]

3220 SLK – A – 1 – 1300 / 1500 – T7 – AR
[1] [2] [3] [4] [5] [6] [7]

[1] Model No. : STK, SLK, MBS
[2] Preload : S (Clearance Type), A (Non-backlash Type)
[3] Nut Quantity : Nut Quantity on Screw shaft
[4] Thread Length : No Symbol (No processing)
[5] Total Length
[6] Accuracy : P5, T7
[7] Surface treatment : No symbol (standard), AR(Nut and Screw), KR (Nut only) RR (Screw only)

※ A screw-nut assembly is recommended if high accuracy or rigidity is required.
※ For surface treatment, mark the type of surface treatment.
※ If end machining is required, please attach a drawing.
※ Refer to the specifications for the Accuracy.
※ MBS type can only be ordered as a screw-nut assembly.
※ Surface coating is not possible on some MBS nuts.
(Please check the page by model number)

Ball Screw

SBC Precision Rolled Ball Screw

STK/STC Precision Rolled Ball Screw STK/STC Type

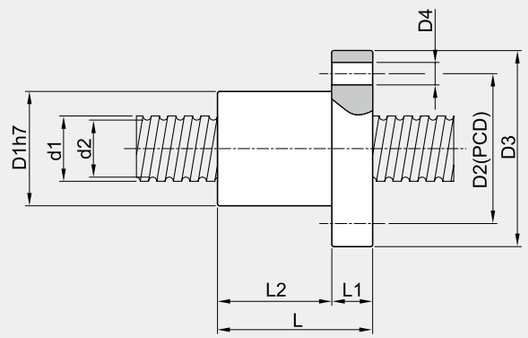

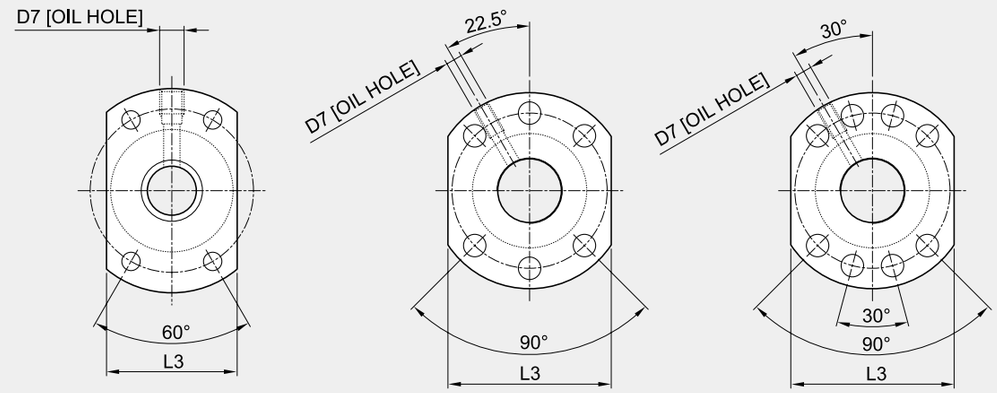

(Unit : mm)

Model No.	d1 (Nominal diameter)	Ph (Lead)	do (Ball circle diameter)	Da (Ball Diameter)	d2 (Root - diameter)	i (No. of circuits)	D1	D2 (PCD)	D3	D4	D7	L	L1	L2	L3	Ca [kN]	Coa [kN]	Max. Length
STK1605	15.6	5	16	3.5	12.7	3x1	34	44	54	4.5	M6x1	45	10	35	40	7.5	12.1	3000
STK2005	19.6	5	20	3.5	16.7	4x1	40	50	60	4.5	M6x1	53	10	43	46	11.0	23.3	4000
STK2505	24.6	5	25	3.5	21.7	4x1	43	55	67	5.5	M6x1	53	10	43	50	12.5	30.4	6000
STK2510	24.6	10	25	3.5	21.7	4x1	60	78	96	9	M6x1	85	15	70	72	19.0	38.0	6000
STC2510	24.6	10	25	3.5	21.7	4x1	40	51	62	6.6	M6x1	85	12	73	48	19.0	38.0	6000
STK3205	31.6	5	32	3.5	28.7	4x1	56	71	86	6.6	M6x1	53	12	41	68	14.2	40.0	6000
STK3210	31.6	10	32	5.556	27.1	4x1	67	85	103	9	M6x1	90	15	75	78	33.2	70.0	6000
STK4005	39.6	5	40	3.5	36.7	4x1	64	82	100	9	M8x1	56	15	41	75	26.3	59.2	6000
STK4010	39.6	10	40	7.144	36.7	4x1	76	96	116	11	M8x1	93	17	76	88	64.9	109	6000
STK5010	49.5	10	50	7.144	43	4x1	75	93	110	11	M8x1	98	16	75	85	66.4	134.3	6000
STK6310	62.5	10	63	7.144	56.9	6x1	90	108	125	11	M8x1	126	18	96	95	93.8	229.7	6000
STK8010	79.5	10	80	7.144	73.9	6x1	105	125	145	13.5	M8x1	128	20	96	110	121.9	374.9	7000

❶ Ca (Basic Dynamic load rating), Coa (Basic static load rating)

Ball Screw

SBC Precision Rolled Ball Screw

SBC Precision Rolled Ball Screw

SLK Long Lead Rolled Ball Screw

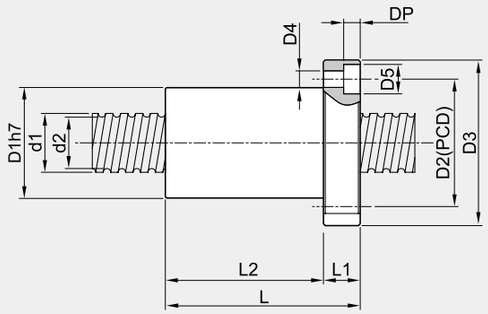

[SLK1520, 2010]

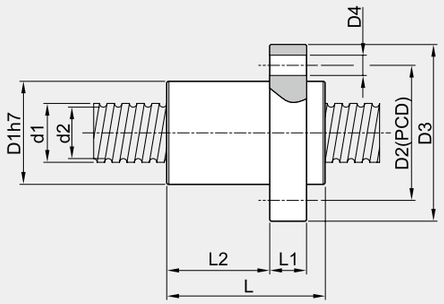

[SLK1610~5050]

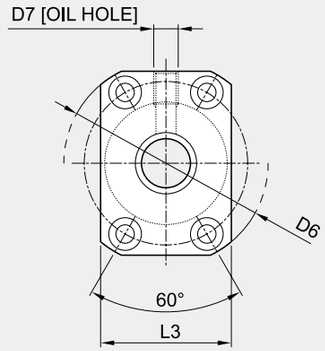

[SLK1520]

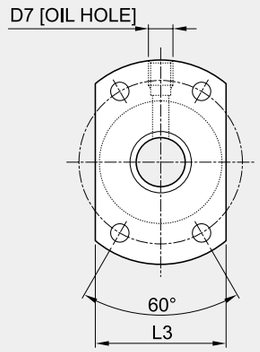

[SLK1610~3232, 4040, 5050]

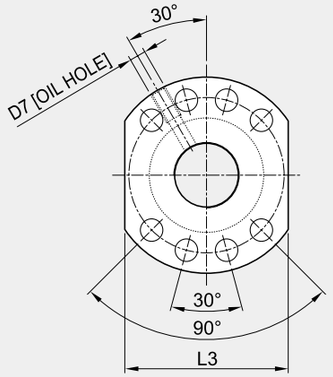

[SLK4020, 5020]

(Unit : mm)

Model No.	d1 (Nominal diameter)	Ph (Lead)	do (Ball circle diameter)	Da (Ball Diameter)	d2 (Root - diameter)	i (No. of circuits)	D1	D2 (PCD)	D3	D4
SLK 1520	15	20	15.5	3.175	12.4	1.5x1	34	45	50	6
SLK 1610	15.9	10	16.6	3.175	13.4	3x1	34	45	57	5.5
SLK 1616	15.9	16	16.6	3.175	13.4	1.8x2	32	42	53	4.5
SLK 2010	20	10	21	3.969	17	2x1	46	59	74	6.6
SLK 2020	19.6	20	20	3.5	16.7	1.8x2	39	50	62	5.5
SLK 2525	24.6	25	25	3.5	21.7	1.8x2	47	60	74	6.6
SLK 3220	32	20	32.7	3.969	28.7	3x1	50	65	80	9
SLK 3232	32	32	33	4.762	28.2	1.8x2	58	74	92	9
SLK 4020	39.6	20	40	5.556	35.2	3x1	63	78	93	9
SLK 4040	39.6	40	40	7.144	34	1.8x2	73	93	114	11
SLK 5020	49.5	20	50	6.35	44.6	5x1	75	93	110	11

D5	DP	D6	D7	L	L1	L2	L3	Ca [kN]	Coa [kN]	Max. Length
–	–	55	M4x0.7	57	7	50	34	4.56	7.23	3000
–	–	–	M6x1	48	10	27.5	40	7	12	3000
–	–	–	M6x1	48	10	27.5	38	7.1	14	3000
11	5.5	–	M6x1	54	13	41	46	12.2	15.2	3000
–	–	–	M6x1	55	10	34	46	11.5	17.5	4000
–	–	–	M6x1	64	12	40.8	56	13	22.6	6000
–	–	–	M6x1	78	13	45	62	20.9	57.7	6000
–	–	–	M6x1	82	15	53	68	17.2	53.9	6000
–	–	–	M8x1	82	15	47.5	70	52.2	103.6	6000
–	–	–	M8x1	99	17	63	84	59.7	108.9	6000
–	–	–	M8x1	120	18	80	85	78.8	188.7	6000

❶ Ca (Basic Dynamic load rating), Coa (Basic static load rating)

Ball Screw

SBC Precision Rolled Ball Screw

SBC Precision Rolled Ball Screw

MBS Miniature Rolled Ball Screw

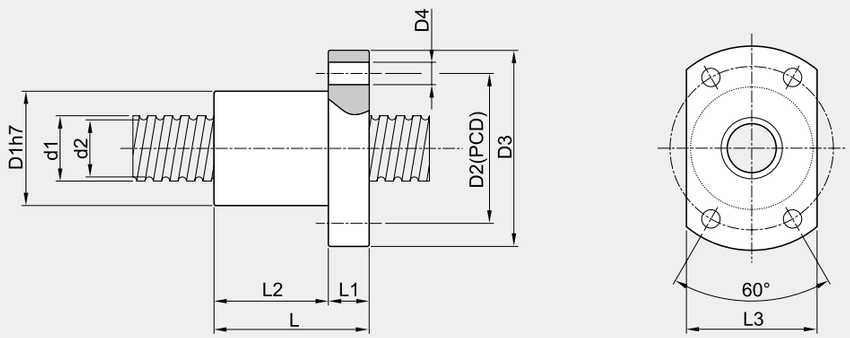

[MBS0601~1205]

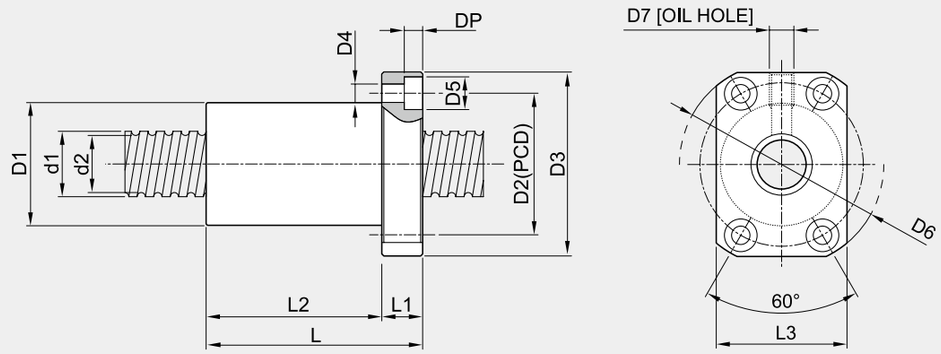

[MBS1210]

(Unit : mm)

Model No.	d1 (Nominal diameter)	Ph (Lead)	do (Ball circle diameter)	Da (Ball Diameter)	d2 (Root - diameter)	i (No. of circuits)	D1	D2 (PCD)	D3	D4	D5	DP	D6	D7	L	L1	L2	L3	Ca [kN]	Coa [kN]	Max. Length
MBS 0601	6	1	6.3	0.8	5.5	3x1	13	21.5	27	3.4	–	–	–	–	15	3.5	11.5	17	0.71	1.18	900
MBS 0801	8	1	8.2	0.8	7.4	4x1	16	24	30	3.4	–	–	–	–	16	4	12	18	0.95	1.91	1200
MBS 0802	8	2	8.4	1.2	7.2	3x1	16	24	30	3.4	–	–	–	–	16	4	12	18	1.13	1.87	1200
MBS 0802.5	8	2.5	8.4	1.2	7.2	2.5x1	20	30	38	4.5	–	–	–	–	21	5	16	23	1.48	2.27	1200
MBS 1204	12	4	12.4	2.381	10	3.5x1	28	39	48	5.5	–	–	–	–	30	6	24	30	4.16	7.23	1400
MBS 1205	12	5	12.4	2	10.4	3.5x1	28	39	48	5.5	–	–	–	–	35	6	29	30	6.49	10.15	1400
MBS 1210	12	10	12	2	10	2x1	30	40	45	4.5	8	4.5	50	M6x1	40	10	30	32	2.5	3.59	3000

❶ Ca (Basic Dynamic load rating), Coa (Basic static load rating)

❷ MBS0601~1205 do not contain a seal. It is necessary to use a dust-prevention device.

❸ Corresponding table on surface coating

Model number	Nut	Screw
MBS0601	X	O
MBS0801, MBS0801, MBS0802.5	X	O
MBS1204, MBS1205, MBS1210	O	O

Ball Screw

DIN Standard SBC Precision Rolled Ball Screw

DIN Standard SBC Precision Rolled Ball Screw

Types and features

SBC Precision Rolled Ball Screw follows European DIN standards.

The screw shaft is rolled with high accuracy and then the raceways are ground to meet the P3(JIS: C3) grade.

These ball screws provide high rigidity, high accuracy, and smooth motion.

(1) European DIN standards

European DIN standard products follow the DIN 69 051/5 standard.

(2) High accuracy lead (P3, P5, T7)

High Accuracy lead s are available in P3, P5, and T7 grades.

(3) The ball raceways of the ball screw nut are all thread-ground

The thread form is finish ground to provide high rigidity, high accuracy and smooth motion.

(4) Always in stock

Ball Screws are always available for fast delivery time.

(5) High quality control

SBC provides high Quality Control to ensure the ball screws meet your expectations.

SDK (Precision rolled Ball Screw)

SDH (Long lead rolled Ball Screw)

Screw Shaft Model No.

(Unit : mm)

Model No.	Diameter	Lead	Max. Length	Accuracy
RM1605	15.6	05	3000	P3, P5, T7
RM1610	15.9	10	3000	P3, P5, T7
RM1616	15.9	16	3000	P3, P5, T7
RM2005	19.6	05	4000	P3, P5, T7
RM2010	19.9	10	4000	P3, P5, T7
RM2020	19.6	20	4000	P3, P5, T7
RM2505	24.6	05	6000	P3, P5, T7
RM2510	24.6	10	6000	P3, P5, T7
RM2525	24.6	25	6000	P3, P5, T7
RM3205	31.6	05	6000	P3, P5, T7
RM3210	31.6	10	6000	P3, P5, T7
RM3220	31.6	20	6000	P3, P5, T7
RM3232	32	32	6000	P3, P5, T7
RM4005	39.6	05	6000	P3, P5, T7
RM4010	39.6	10	6000	P3, P5, T7
RM4020	39.6	20	6000	P3, P5, T7
RM4040	39.6	40	6000	P3, P5, T7
RM5010	49.5	10	6000	P3, P5, T7
RM6310	62.5	10	6000	P3, P5, T7

SBC Follows DIN and JIS Standards

DIN Standard	JIS Standard
P5	C5
T7	C7

Ball Screw

DIN Standard SBC Precision Rolled Ball Screw

DIN Standard SBC Precision Rolled Ball Screw

Ordering Example

[The Nut Ordering]

20 05 SDK – S – KR
[1] [2] [3] [4] [5]

[1] Diameter
[2] Lead
[3] Nut Type : SDK, SDH
[4] Preload : S (Clearance Type)
[5] Surface treatment : No symbol (standard), KR (Nut surface trearment)

※ When ordering only a nut, the preload is only S type (Clearance type).

[The Screw shaft Ordering]

RM 2005 – 1500L – T7 – RR
[1] [2] [3] [4]

[1] Model No.
[2] Screw shaft length
[3] Accuracy
[4] Surface treatment : No symbol (standard), RR (Screw surface trearment)

※ Refer to the specifications for the Model No.
※ Individual screw shafts are only available in the T7 precision grade.

[Ordering]

2005 SDK – A – 1 – 1300 / 1500 – T7 – AR
[1] [2] [3] [4] [5] [6] [7]

[1] Model No. : SDK, SDH
[2] Preload : S (Clearance Type), A (Non-backlash Type)
[3] Nut Quantity : Nut Quantity on Screw shaft
[4] Thread Length : No Symbol (No processing)
[5] Total Length
[6] Accuracy : P5, T7
[7] Surface treatment : No symbol (standard), AR(Nut and Screw), KR (Nut only) RR (Screw only)

※ A screw-nut assembly is recommended if high accuracy or rigidity is required.
※ For surface treatment, mark the type of surface treatment.
※ If end machining is required, please attach a drawing.
※ Refer to the specifications for the Accuracy.

Ball Screw

DIN Standard SBC Precision Rolled Ball Screw

DIN Standard SBC Precision Rolled Ball Screw

SDK Type Precision Rolled Ball Screw

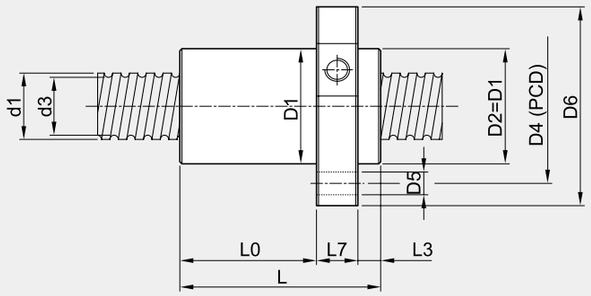

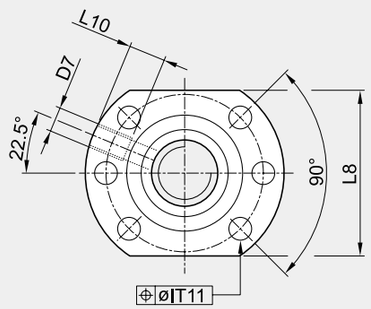

[SDK1605~3210]

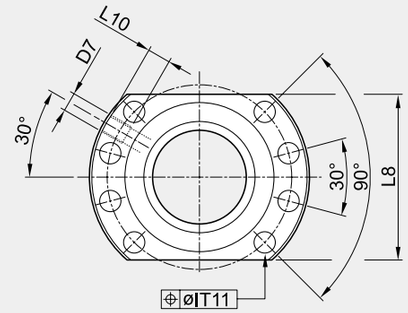

[SDK4005~8010]

(Unit : mm)

	d1 (Screw shaft outer diameter)	Ph (Lead)	do (Ball circle diameter)	Da (Ball Diameter)	d3 (Root - diameter)	i (No. of circuits)	Sa	D1g6	D4 (PCD)	D5	D6
SDK 1605	15.6	5	16.5	3.5	12.7	3	0.05	28	38	5.5	48
SDK 2005	19.6	5	20.5	3.5	16.7	3	0.05	36	47	6.6	58
SDK 2010	19.9	10	21	3.969	16.9	3	0.05	36	47	6.6	58
SDK 2505	24.6	5	25.5	3.5	21.7	3	0.05	40	51	6.6	62
SDK 2510	24.6	10	25.5	3.5	21.7	4	0.05	40	51	6.6	62
SDK 3205	31.6	5	32.5	3.5	28.7	4	0.05	50	65	9	80
SDK 3210	31.6	10	33	5.556	27.1	3	0.06	50	65	9	80
SDK 4005	39.6	5	40.5	3.5	36.7	5	0.06	63	78	9	93
SDK 4010	39.6	10	41.6	7.144	34.0	4	0.06	63	78	9	93
SDK 5010	49.5	10	51.5	7.144	43	4	0.06	75	93	11	110
SDK 6310	62.5	10	64.5	7.144	56.9	5	0.06	90	108	11	125

L±1	L0±1	L3-0.5	L7	L8	D7	L10	Ca [kN]	Coa [kN]	Max. Length	Nut Mass [kg]	Screw shaft Mass [kg/m]	Screw shaft Moment of Inertia [kg · m m²/m]
48.5	33	5.5	10	40	M6x1	8	9.5	10.9	3000	0.25	1.2	32
48.5	33	5.5	10	44	M6x1	8	11.5	15.5	4000	0.35	2.0	85
69	53	6.0	10	44	M6x1	8	13.6	19	4000	0.35	2.0	85
49	33	6.0	10	48	M6x1	8	13.1	20.2	5000	0.37	3.3	225
80	64	6.0	10	48	M6x1	8	19	38	5000	0.45	3.3	225
57	39	6.0	12	62	M6x1	8	19.3	36.3	6000	0.7	5.6	645
73	55	6.0	12	62	M6x1	8	26.4	39	6000	0.8	5.3	580
66	45	7.0	14	70	M8x1	10	26.3	59.2	6000	1.2	9.0	1650
88.5	67.5	7.0	14	70	M8x1	10	64.9	109	6000	1.4	8.3	1400
92	69	7.0	16	85	M8x1	10	66.4	134.3	6000	2	13.5	3700
103.5	78.5	7.0	18	95	M8x1	10	93.8	229.7	6000	3	22	9870

❶ Ca (Basic Dynamic load rating), Coa (Basic static load rating)

❷ Sa (Axial Backlash)

Ball Screw

DIN Standard SBC Precision Rolled Ball Screw

DIN Standard SBC Precision Rolled Ball Screw

SDH Type Long Lead Rolled Ball Screw

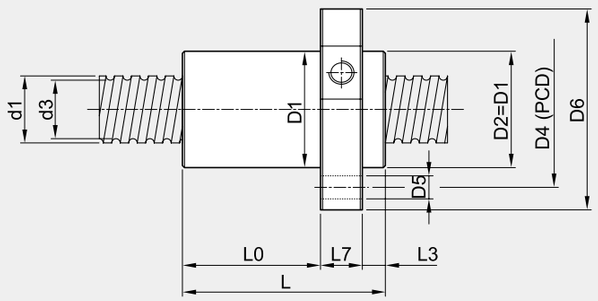

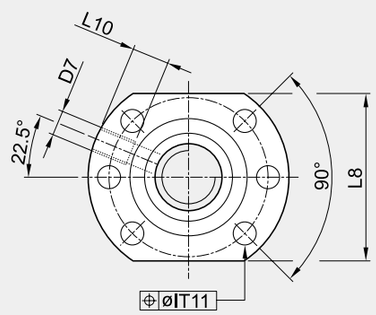

[SDH1610~3232]

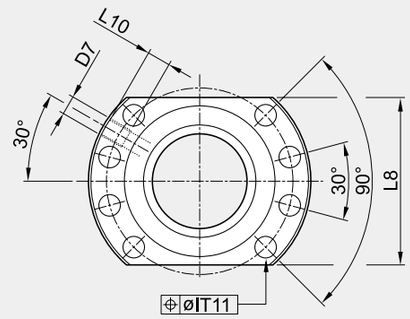

[SDH4020~6320]

(Unit : mm)

Model No.	d1 (Screw shaft outer diameter)	Ph (Lead)	do (Ball circle diameter)	Da (Ball Diameter)	d3 (Root - diameter)	i (No. of circuits)	Sa	D1g6	D4 (PCD)	D5	D6	L±1	L0±1	L3-0.5	L7	L8	D7	L10	Ca [kN]	Coa [kN]	Max. Length	Nut Mass [kg]	Screw shaft Mass [kg/m]	Screw shaft Moment of Inertia [kg .m m²/m]
SDH 1610	15.9	10	16.6	3.175	13.4	2.8	0.05	28	38	5.5	48	45	26	9	10	40	M6x1	8	7	12	3000	0.29	1.3	37
SDH 1616	15.9	16	16.6	3.175	13.4	3.6	0.05	28	38	5.5	48	48	28	10	10	40	M6x1	8	7.1	14	3000	0.29	1.3	37
SDH 2020	19.6	20	20.5	3.5	16.7	3.6	0.05	36	47	6.6	58	54	33	11	10	44	M6x1	8	10.8	18.6	4000	0.45	1.9	73
SDH 2525	24.6	25	25.5	3.5	21.7	3.6	0.05	40	51	6.6	62	64	41	11	12	48	M6x1	8	13.1	26	5000	0.55	3.3	225
SDH 3220	31.6	20	33	5.6	27.1	5.6	0.06	56	71	9	86	83	57	14	12	68	M6x1	8	47.2	83.2	6000	1.4	5.3	580
SDH 3232	32	32	33	4.7625	28.2	3.6	0.06	56	71	9	86	83	54	17	12	68	M6x1	8	17.2	53.9	6000	1.4	5.3	580
SDH 4020	39.6	20	41.4	5.55	35.2	5.6	0.06	63	78	9	93	83	56	13	14	70	M8x1	10	52.2	103.6	6000	1.6	8.6	1520
SDH 4040	39.6	40	41.6	7.144	34	3.6	0.06	70	85	9	100	102	67	21	14	77	M8x1	10	59.7	108.9	6000	2.4	8.4	1430

❶ Ca (Basic Dynamic load rating), Coa (Basic static load rating)

❷ Sa (Axial Backlash)

Ball Screw

DIN Standard Precison Rolled Ball Screw

DIN Standard Precison Rolled Ball Screw

Types and features

FK Standard Rolled Ball Screw

FH Rolled Ball Screw

ZG Rolled Ball Screw

Screw Shaft Model No.

(unit : mm)

Model No.	Diameter	Lead	Max. Length	Accuracy
RM1204	12	04	3000	P5, T7
RM1605	15.6	05	3000	P5, T7
RM2005	19.6	05	4000	P5, T7
RM2020	19.6	20	4000	P5, T7
RM2505	24.6	05	6000	P5, T7
RM2510	24.6	10	6000	P5, T7
RM2525	24.6	25	6000	P5, T7
RM3205	31.6	05	6000	P5, T7
RM3210	31.6	10	6000	P5, T7
RM3220	31.6	20	6000	P5, T7
RM4005	39.6	05	6000	P5, T7
RM4010	39.6	10	6000	P5, T7
RM4020	39.6	20	6000	P5, T7
RM4040	39.6	40	6000	P5, T7
RM5010	49.5	10	6000	P5, T7
RM5020	49.5	20	6000	P5, T7
RM6310	62.5	10	6000	P5, T7
RM6320	62.5	20	6000	P5, T7
RM8010	79.5	10	7000	T7

SBC Follows DIN and JIS Standards

DIN Standard	JIS Standard
P5	C5
T7	C7

Ball Screw

DIN Standard Precison Rolled Ball Screw

Ordering Example

[The Nut Ordering]

20 05 FK – S – KR
[1] [2] [3] [4] [5]

[1] Diameter
[2] Lead
[3] Nut Type
[4] Preload : S (Clearance Type)
[5] Surface treatment : No symbol (standard), KR (Nut surface trearment)

※ When ordering only a nut, the preload is only S type (Clearance type).

[The Screw shaft Ordering]

RM 2005 – 1500L – T7 – RR
[1] [2] [3] [4]

[1] Model No.
[2] Screw shaft length
[3] Accuracy
[4] Surface treatment : No symbol (standard), RR (Screw surface trearment)

※ Refer to the specifications for the Model No.
※ Individual screw shafts are only available in the T7 precision grade.

[Ordering]

2005 FK – A – 1 – 1300 / 1500 – T7 – AR
[1] [2] [3] [4] [5] [6] [7]

[1] Model No.
[2] Preload : S (Clearance Type), A (Non-backlash Type)
[3] Nut Quantity : Nut Quantity on Screw shaft
[4] Thread Length : No Symbol (No processing)
[5] Total Length
[6] Accuracy : P5, T7
[7] Surface treatment : No symbol (standard), AR(Nut and Screw), KR (Nut only) RR (Screw only)

※ A screw-nut assembly is recommended if high accuracy or rigidity is required.
※ For surface treatment, mark the type of surface treatment.
※ If end machining is required, please attach a drawing.
※ Refer to the specifications for the Accuracy.