INOVANCE

GL20 Series

Compact, flexible, high-speed distributed I/O system

- Compact footprint
- Easy installation, wiring and replacement
- Fast response times (microsecond range)
- Conformal coating - compliant with 3C3 and 3S2
- Multiprotocol

EtherCAT PROFINET

DESIGN AWARD 2022

CE

c UL us LISTED E467465 IND.CONT.EQ

Expansion capability

GL20 expansion modules

NEW generation slim and compact distributed I/O system from **INOVANCE**, with faster response times, easy connection via spring clamp terminals, and a wider offer of communication protocols and I/O expansion modules, compared to previous generations.

Firmware update can be done through TYPE-C USB port, to connect the PC with the firmware update tool

Independent status diagnosis LED indicators; coloured letters for **quick identification of I/O functions**

D-BUS connector design with gold plated terminals to give high protection against corrosion

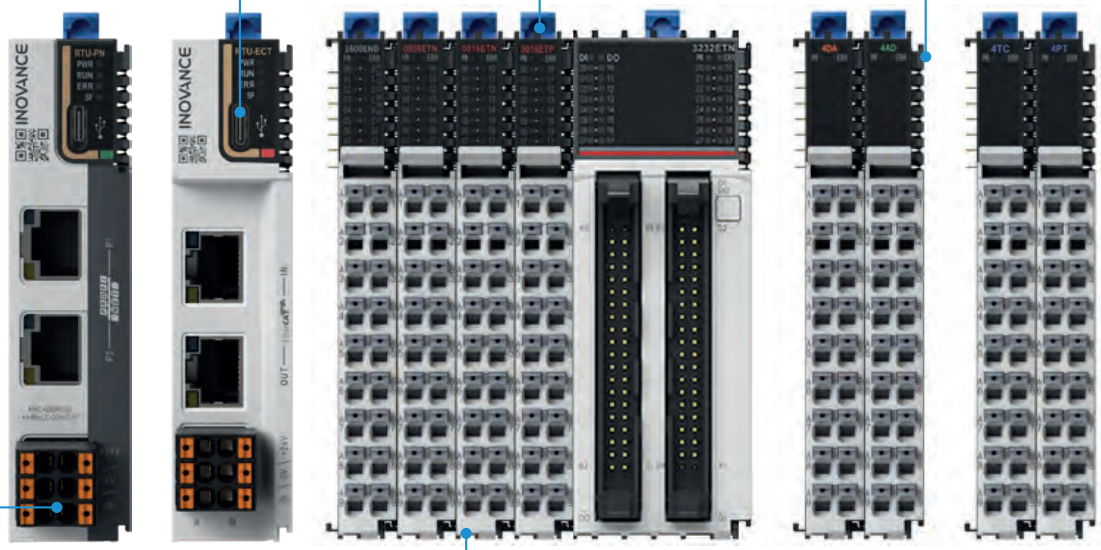

Redundant power supply terminals (left and right internally shorted) for easy daisy chain connection

Removable terminals to allow **quick module replacement** without disconnecting cables

Push-in terminals with large aperture to fit various types of cables and allow easy wiring

100 M local bus

24 VDC power supply
2 channels (A&B)

Wiring diagram

EtherCAT coupler

PROFINET coupler

Type C port for firmware upgrade

I/O LED indicator

Label for each connection terminal

Digital output module

Analog output module

Digital input module

Analog input module

Communication module

Others

Expansion capability

GL20 expansion modules

Compact Size

Saves 2/3 space during cabinet installation compared with our previous generation I/O family

GL20 Series

Space utilisation maximised

Module width reduced to **12 mm**

2/3 cabinet space saved

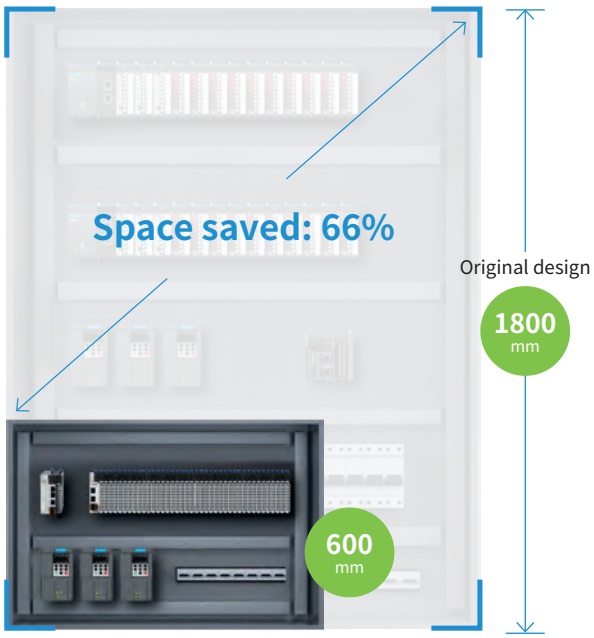

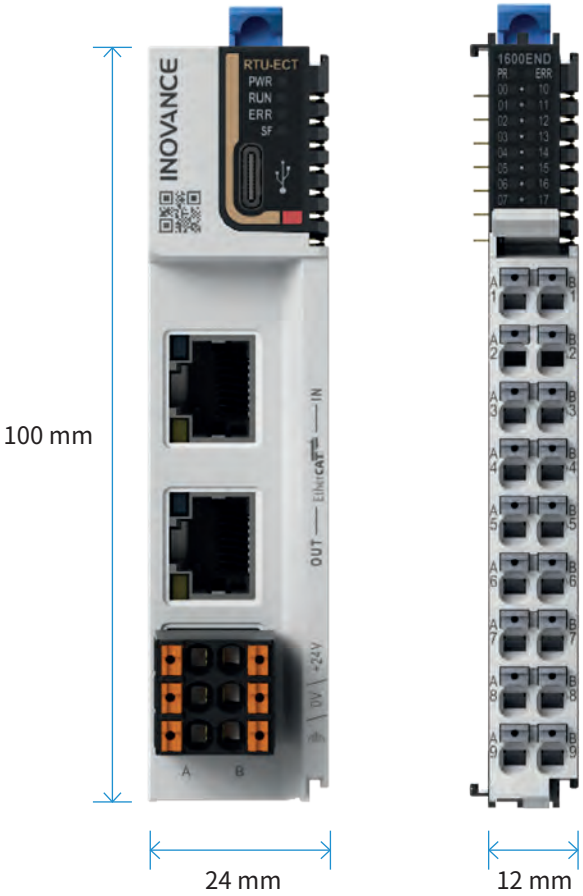

Easy wiring

Easy wiring via spring-type terminals with large 1.5mm² apertures

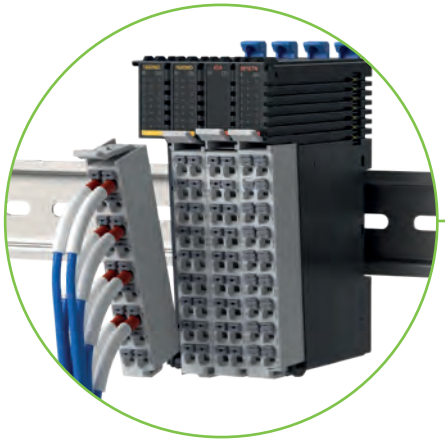

Easy installation

With pluggable terminal block (spring clamp type)

Easy replacement

Slides in and out for easy module removal

Expansion capability

GL20 EtherCAT bus coupler

EtherCAT®

- Min. cycle time of 125 microseconds
- Allows EtherCAT alias configuration
- USB-C port for firmware upgrade

The bus coupler module supports up to 16 I/O expansion modules. If more than 16 modules are required, an additional GL20-PS2 power supply module is needed. To find the optimal solution, please consult with your local Inovance representative.

Item	Specification
Material code	01440286
Model	GL20-RTU-ECT
IP rating	IP20
Certification	CE & UL

Power supply	
Rated voltage of terminal input power supply	24 VDC (20.4 VDC to 28.8 VDC)
Rated current of terminal input power supply	0.6 A (typical value: 24 V)
Rated voltage of bus input power supply	5 VDC (4.75 VDC to 5.25 VDC)
Rated current of bus input power supply	2 A (typical value: 5 V)
Power output derating	Operation at ambient temperatures between 45 and 55°C can be achieved by applying a derating of up to 85% (the output current cannot exceed 1.7 A)
Power supply protection	Overcurrent protection, reverse-connection-proof, surge protection
Ambient operating temperature	–20°C to 55°C
Ambient operating humidity	<95% RH, non-condensing
Atmosphere	Free from corrosive gases
Ambient storage temperature	–20°C to 60°C (<90% RH, non-condensing)
Altitude	Below 2,000 m (80 kPa)
Pollution degree	PD2
Noise immunity	2 kV on power supply line (Conforms to IEC 61000-4-4)
Overvoltage category	II
EMC immunity level	Zone B, IEC 61131-2
Vibration resistance	IEC 60068-2-6
Shock resistance	IEC 60068-2-27
Size (WxHxD: mm)	24x100x83

Expansion capability

GL20 PROFINET bus coupler

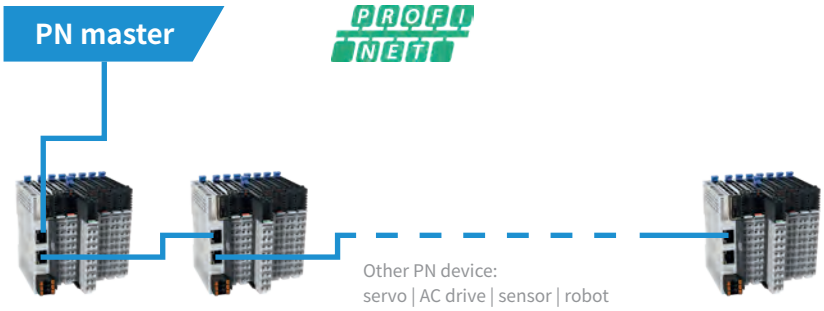

Comm mode：RT

Min cycle：1ms

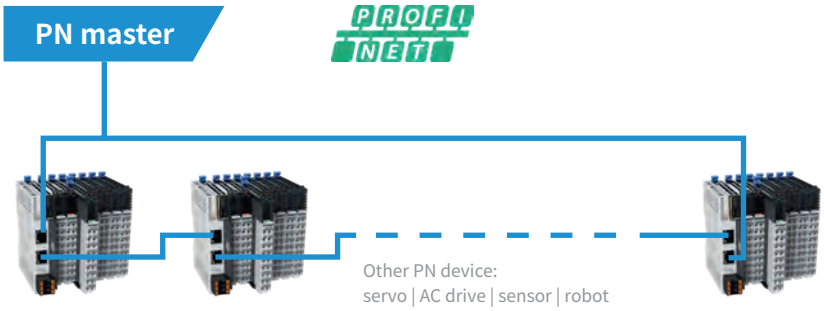

MRP

Up to 50 devices

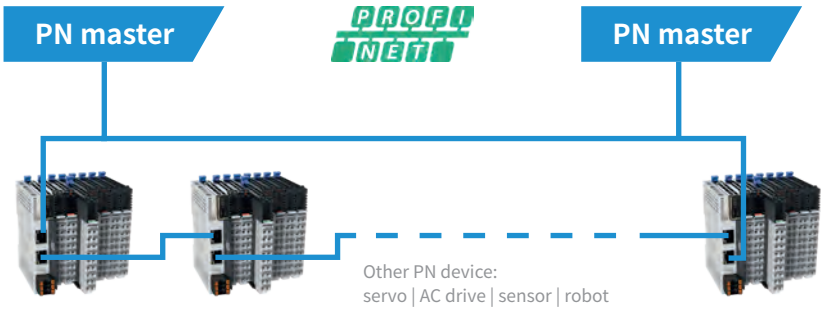

Memory (device) share

Note: The bus coupler module supports up to 16 I/O expansion modules. If more than 16 modules are required, an additional GL20-PS2 power supply module is needed. To find the optimal solution, please consult with your local Inovance representative.

Item	Specification
Material code	01440289
Model	GL20-RTU-PN
IP rating	IP20
Certification	CE & UL

Power supply	
Rated voltage of terminal input power supply	24 VDC (20.4 VDC to 28.8 VDC)
Rated current of terminal input power supply	0.6 A (typical value: 24 V)
Rated voltage of bus input power supply	5 VDC (4.75 VDC to 5.25 VDC)
Rated current of bus input power supply	2 A (typical value: 5 V)
Power output derating	Operation at ambient temperatures between 45 and 55°C can be achieved by applying a de-rating of up to 80% (the output current cannot exceed 1.6 A)
Power supply protection	Reverse-connection-proof, surge protection
Ambient operating temperature	–20°C to 55°C
Ambient operating humidity	<95% RH, non-condensing
Atmosphere	Free from corrosive gases
Ambient storage temperature	–20°C to 60°C (<90% RH, non-condensing)
Altitude	Below 2,000 m (80 kPa)
Pollution degree	PD2
Noise immunity	2 kV on power supply line (Conforms to IEC 61000-4-4)
Overvoltage category	II
EMC immunity level	Zone B, IEC 61131-2
Vibration resistance	IEC 60068-2-6
Shock resistance	IEC 60068-2-27
Size (WxHxD: mm)	24x100x83

Expansion capability

GL20 digital inputs (PNP/NPN)

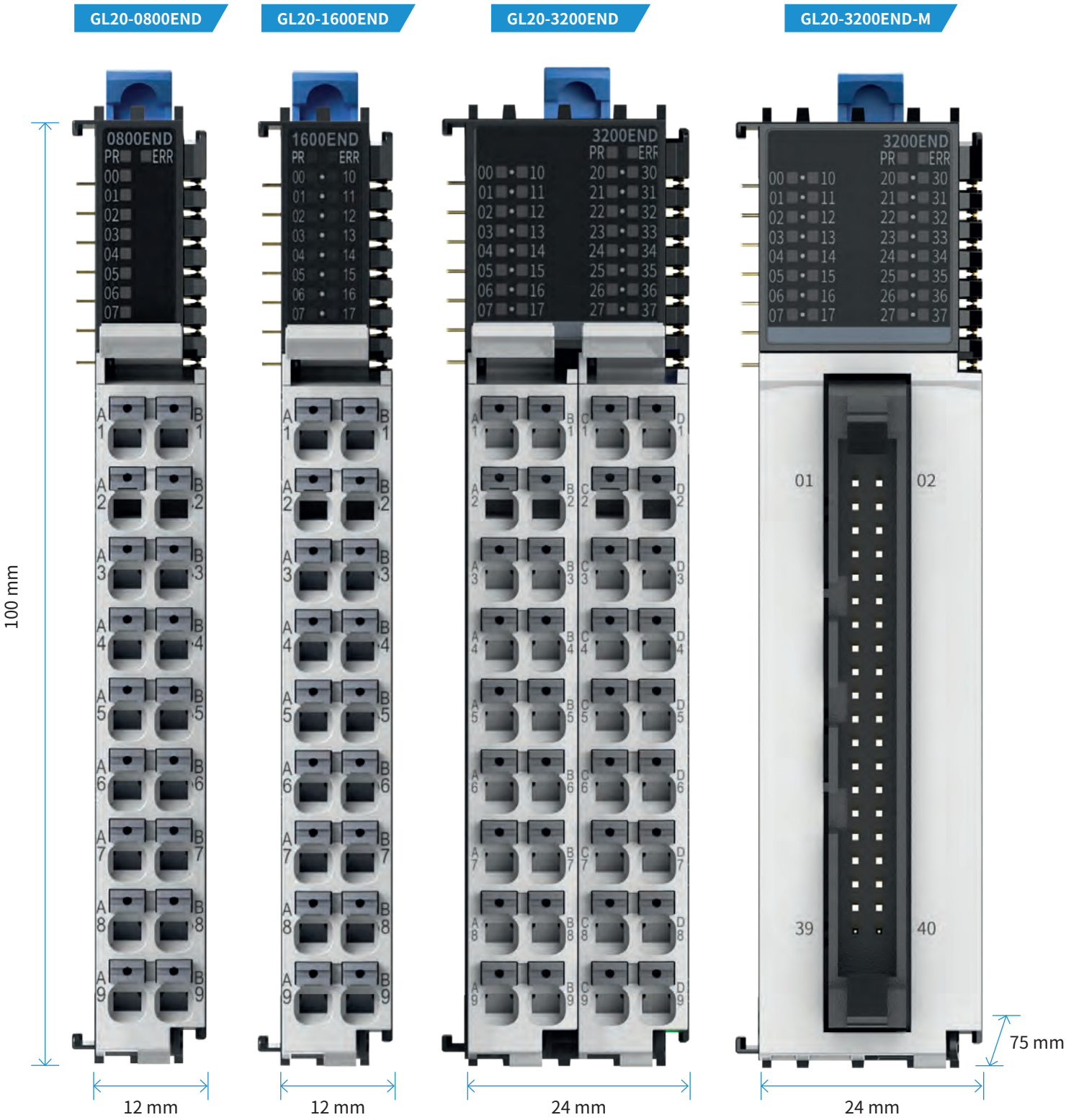

Requires external terminal block
T024-K and extension cable

Item	Specification			
Material code	**01440381**	**01440291**	**01440466**	**01440378**
Model	GL20-0800END	GL20-1600END	GL20-3200END	GL20-3200END-M
IP rating	IP20			
Certification	CE & UL	CE & UL	CE	CE
Ambient temperature	-20 °C to +55 °C			

Power supply				
Rated voltage of bus input power supply	5 VDC (4.75 VDC ~ 5.25 VDC)			
Rated current of bus input power supply	100 mA (typical at 5 V)	100 mA (typical at 5 V)	60 mA (typical at 5 V)	125 mA (typical at 5 V)
Rated voltage of terminal input power supply	N/A			
Rated current of terminal input power supply	N/A			
Module hot swap function	Not supported			

Input				
Input mode	Digital input			
Input type	Source/Sink type (PNP/NPN)			
Number of input channels	8	16	32	32
Input voltage class	24 VDC±10% (21.6 VDC to 26.4 VDC)			
Input current (typical)	4 mA (typical value at 24 V)			
ON voltage	> 15 VDC			
OFF voltage	< 5 VDC			
Hardware response time (ON/OFF)	100 us/100 us			
Software filter time	Supported			
Input impedance	Reference value 5.3 k to 5.6 k			
Isolation	Yes			
Protective functions	/			

Expansion capability

GL20 digital outputs (PNP)

GL20-0008ETP

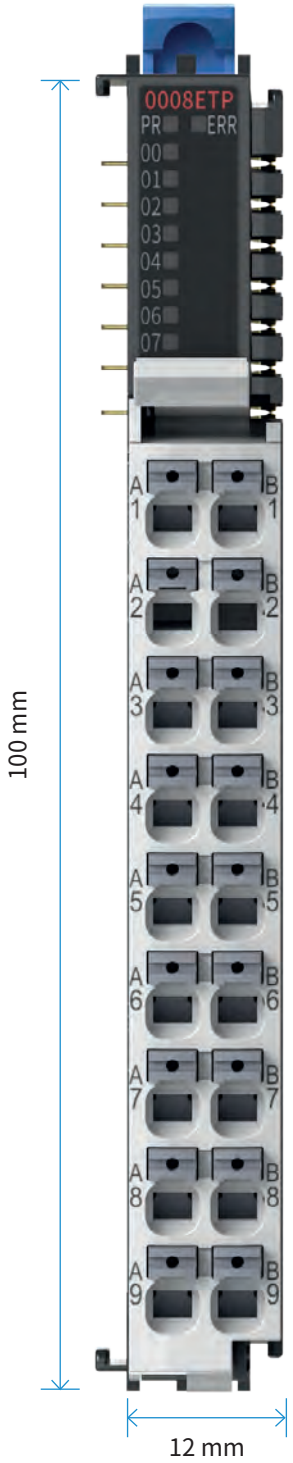

GL20-0016ETP

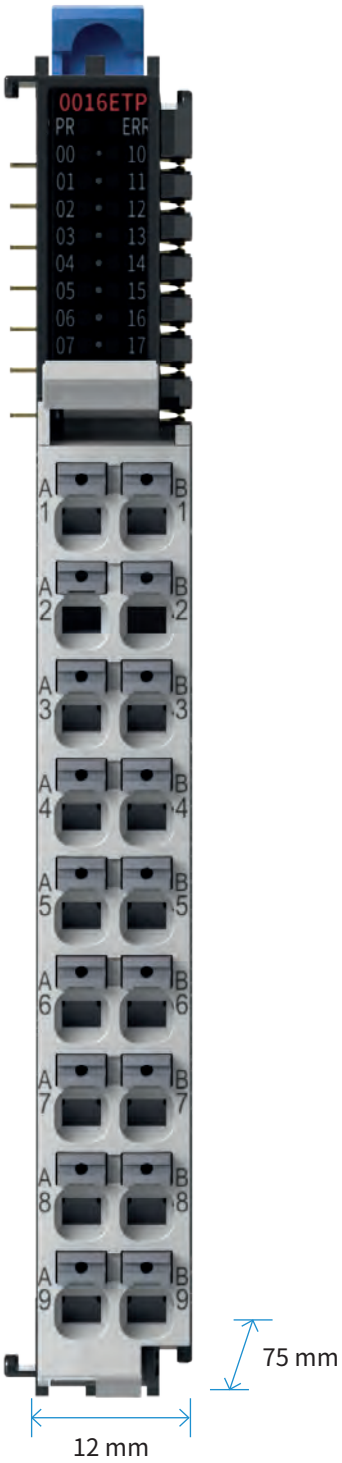

Item	Specification	
Material code	**01440380**	**01440292**
Model	GL20-0008ETP	GL20-0016ETP
IP rating	IP20	
Certification	CE & UL	CE & UL
Ambient temperature	-20°C to +55°C	

Power supply	
Rated voltage of bus input power supply	5 VDC (4.75 VDC ~ 5.25 VDC)
Rated current of bus input power supply	85 mA (typical value at 5 V)
Rated voltage of terminal input power supply	24 VDC (20.4 VDC to 28.8 VDC)
Rated current of terminal input power supply	2 A (typical value at 24 V)
Module hot swap function	Not supported

Output		
Output mode	Digital output, transistor high-side output	
Output type	Source type (PNP)	
Number of output channels	8	16
Output voltage class	24 VDC±10% (21.6 VDC to 26.4 VDC)	
Output load (resistive load)	0.5 A/point, 4 A/module	
Output load (inductive load)	7.2 W/point, 24 W/module	
Output load (lamp load)	5 W/point, 18 W/module	
Hardware response time (ON/OFF)	100 µs/100 µs	
Leakage current upon OFF	10 µA	
Switching frequency	100 Hz for resistive load, 0.5 Hz for inductive load, 10 Hz for lamp load	
Isolation	Yes	
Protective functions	Short circuit and overcurrent protection	

Expansion capability

GL20 digital outputs (NPN)

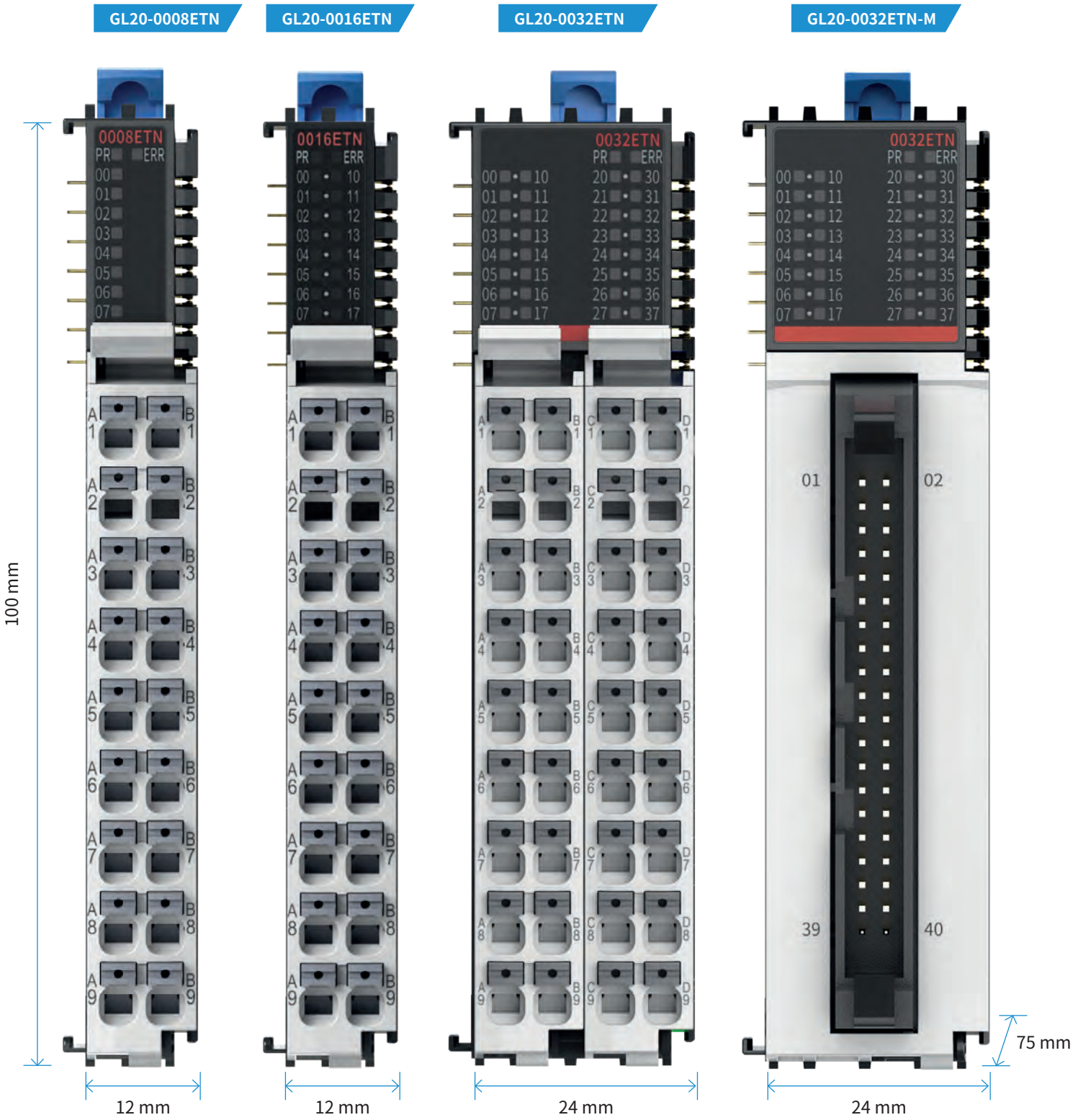

Requires external terminal block T024-K and extension cable

Item	Specification			
Material code	**01440380**	**01440292**	**01440467**	**01440377**
Model	GL20-0008ETP	GL20-0016ETP	GL20-0032ETN	GL20-0032ETN-M
IP rating	IP20			
Certification	CE & UL	CE & UL	CE	CE
Ambient temperature	-20 °C to +55 °C			

Power supply				
Rated voltage of bus input power supply	5 VDC (4.75 VDC ~ 5.25 VDC)			
Rated current of bus input power supply	100 mA (typical at 5 V)	100 mA (typical at 5 V)	125 mA (typical at 5 V)	125 mA (typical at 5 V)
Rated voltage of terminal input power supply	24 VDC (20.4 VDC to 28.8 VDC)			
Rated current of terminal input power supply	12 mA (typical value at 24 V)	12 mA (typical value at 24 V)	100 mA (typical value at 24 V)	100 mA (typical value at 24 V)
Module hot swap function	Not supported			

Output				
Output mode	Digital output, transistor low-side output			
Output type	Sink type (NPN)			
Number of output channels	8	16	32	32
Output voltage class	24 VDC±10% (21.6 VDC to 26.4 VDC)			
Output load (resistive load)	0.5 A/point, 4 A/module	0.5 A/point, 4 A/module	0.5 A/point, 8 A/module	0.5 A/point, 8 A/module
Output load (inductive load)	7.2 W/point, 24 W/module	7.2 W/point, 24 W/module	7.2 W/point, 48 W/module	7.2 W/point, 48 W/module
Output load (lamp load)	5 W/point, 18 W/module	5 W/point, 18 W/module	5 W/point, 36 W/module	5 W/point, 36 W/module
Hardware response time (ON/OFF)	100 µs/100 µs			
Leakage current upon OFF	10 µA			
Switching frequency	100 Hz for resistive load, 0.5 Hz for inductive load, 10 Hz for lamp load			
Isolation	Yes			
Protective functions	Short circuit and overcurrent protection			

Expansion capability

GL20 digital inputs (PNP/NPN) & outputs (NPN)

GL20-0808ETN

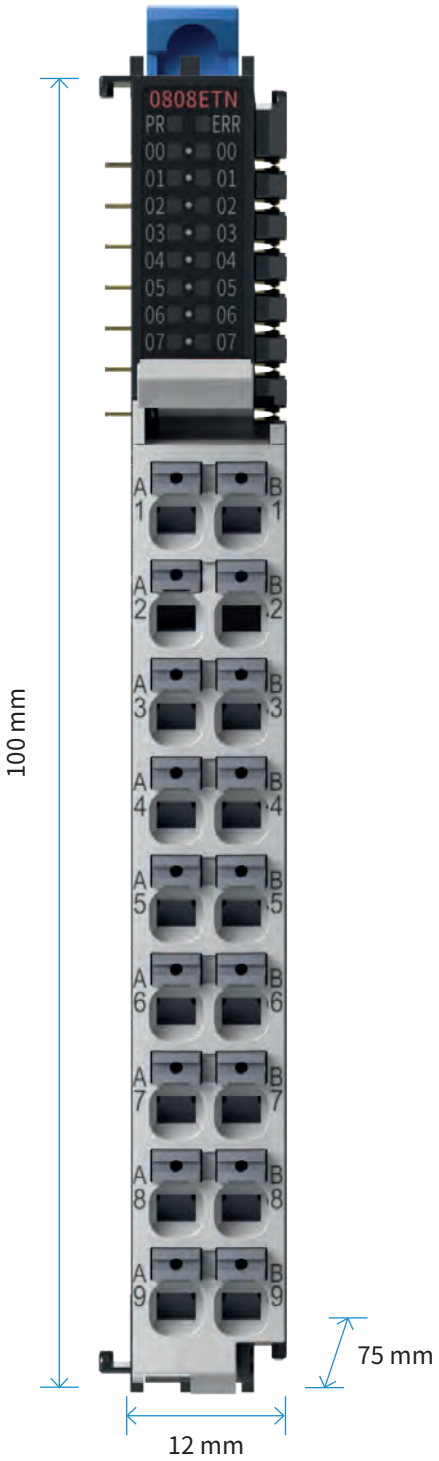

GL20-3232ETN-M

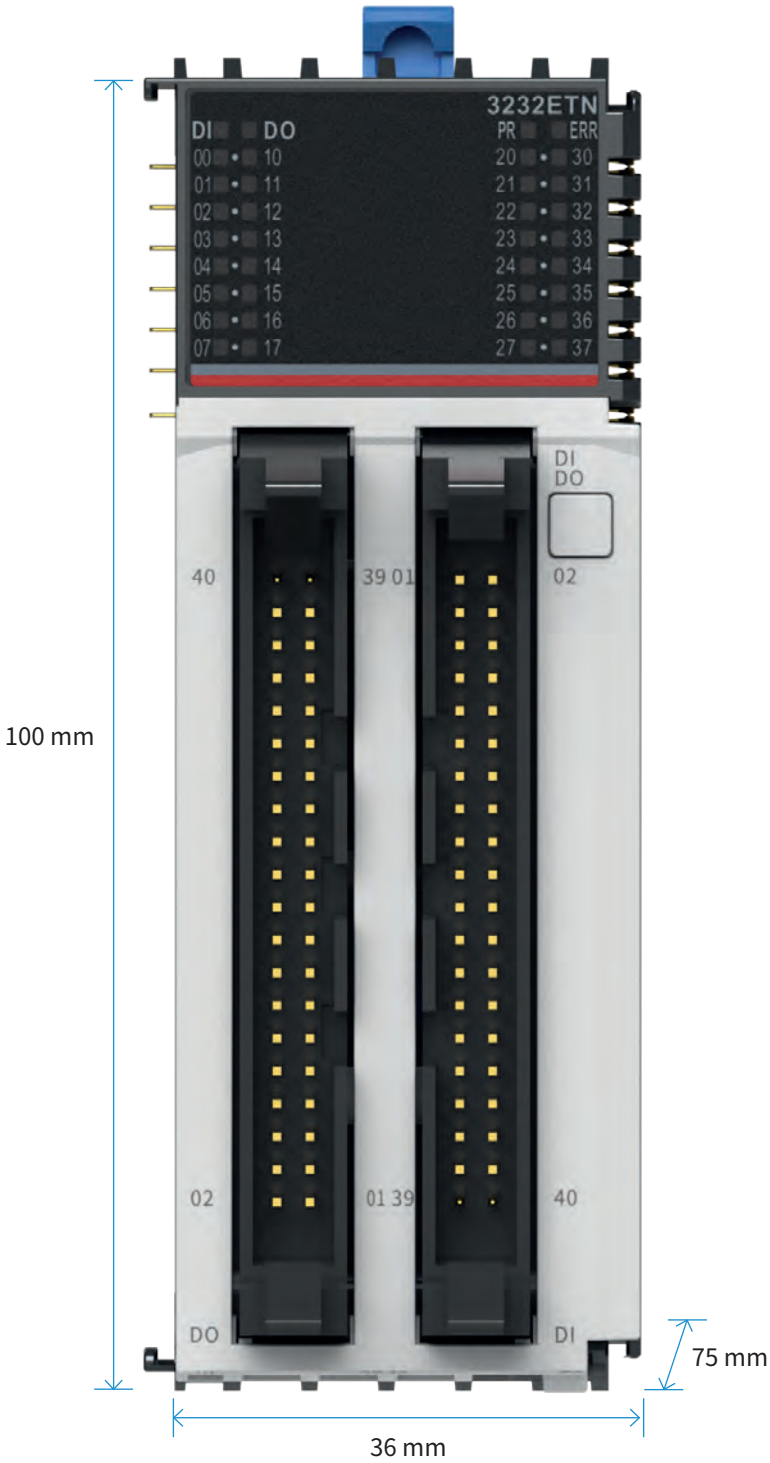

Item	Specification	
Material code	**01440339**	**01440290**
Model	GL20-0808ETN	GL20-3232ETN-M
IP rating	IP20	
Certification	CE & UL	CE
Ambient temperature	-20°C to +55°C	

Power supply		
Rated voltage of bus input power supply	5 VDC (4.75 VDC ~ 5.25 VDC)	
Rated current of bus input power supply	85 mA (typical at 5 V)	250 mA (typical at 5 V)
Rated voltage of terminal input power supply	24 VDC (20.4 VDC ~ 28.8 VDC)	
Rated current of terminal input power supply	12 mA (typical value at 24 V)	24 mA (typical value at 24 V)
Module hot swap function	Not supported	

Input		
Input mode	Digital input	
Input type	Sink type (NPN)	Source/Sink type (PNP/NPN)
Number of input channels	8	32
Input voltage class	24 VDC±10% (21.6 VDC to 26.4 VDC)	
Input current (typical)	4 mA (typical value at 24 V)	
ON voltage	> 15 VDC	
OFF voltage	< 5 VDC	
Hardware response time (ON/OFF)	100 us/100 us	
Software filter time	Supported	
Input impedance	Reference value 5.3 k to 5.6 k	
Isolation	Yes	
Protective functions	/	

Output		
Output type	Digital output, transistor low-side output	
Output method	Sink type (NPN)	
Output channel	8	32
Output voltage class	24 VDC±10% (21.6 VDC to 26.4 VDC)	
Output load (resistive load)	0.5 A/point, 4 A/module	0.5 A/point, 8 A/module
Output load (inductive load)	7.2 W/point, 24 W/module	7.2 W/point, 48 W/module
Output load (lamp load)	5 W/point, 18 W/module	5 W/point, 36 W/module
Hardware response time ON/OFF	100 us/100 us	
Leakage current upon OFF	10 uA	
Switching frequency	100 Hz for resistive load, 0.5 Hz for inductive load, 10 Hz for lamp load	
Isolation	Yes	
Protective functions	Short circuit and overcurrent protection	

Expansion capability

Relay module

GL20-0008R

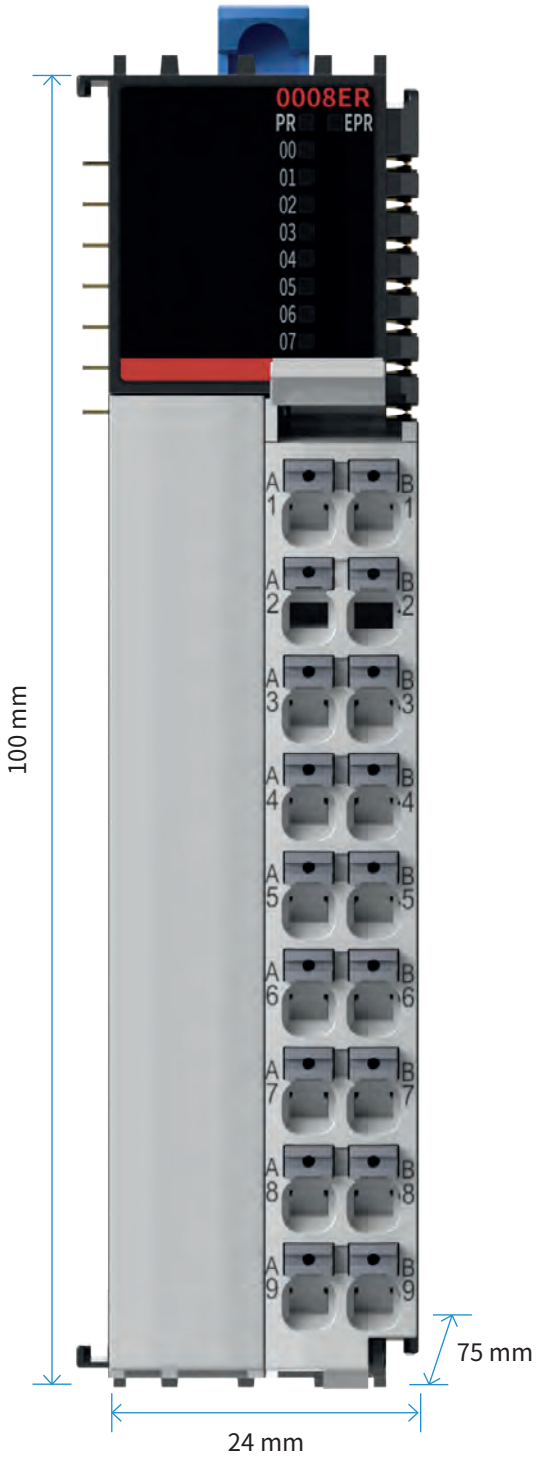

Item	Specification
Material code	**01440334**
Model	GL20-0008R
IP rating	IP20
Certification	CE & UL
Ambient temperature	-20°C to +55°C

Power supply	
Rated voltage of bus input power supply	5 VDC (4.75 VDC ~ 5.25 VDC)
Rated current of bus input power supply	85 mA (typical at 5 V)
Rated voltage of terminal input power supply	24 VDC (21.6 VDC ~ 26.4 VDC)
Rated current of terminal input power supply	50 mA (typical value at 24 V)
Module hot swap function	Not supported

Output	
Output type	Digital output, relay output
Output method	Dry contact
Output channel	8
Output voltage level	250 V AC/30 VDC
Output load (resistive load)	2 A/point, 8 A/module
Output load (inductive load)	1 A/point, 4 A/module
Output load (lamp load)	30 W/point, 120 W/module
Hardware response time ON/OFF	About 15ms
Minimum load	5 VDC, 5 mA
On-off level	No more than 6 times per minute (exceeding this will cause the switch to fail or even be damaged)
Whether to isolate	Yes
Output action display	When the output is in the driving state, the output indicator is on (software control)
Output derating	Derating 50% when working at 55°C (at the same time, the output current of ON does not exceed 4A), or derate 10°C when all output points are ON
Protective function	None

Power supply expansion

GL20-PS2

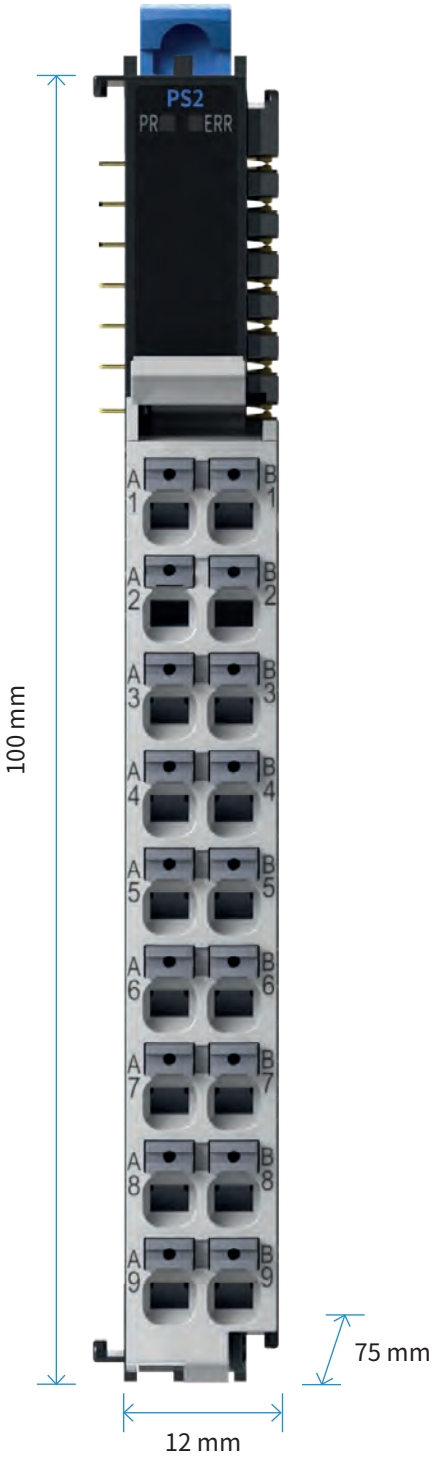

Item	Specification
Material code	**01440351**
Model	GL20-PS2
IP rating	IP20
Certification	CE & UL
Ambient temperature	-20°C to +55°C

Power supply	
Rated voltage of bus output power supply	5 VDC (4.5 VDC to 5.5 VDC)
Rated current of bus output power supply	2 A (typical at 5 V)
Rated voltage of terminal input power supply	24 VDC (20.4 VDC ~ 28.8 VDC)
Rated current of terminal input power supply	0.5 A (typical at 24 V)
Terminal current capacity	4 A max.
24V input anti-reverse	Supported
Power isolation	Not supported

NOTE: The rated current of the internal bus of the coupler is 2 A. If a higher current is required, a combination of the coupler and the power supply unit GL20-PS2 should be used. Consult with your local Inovance office for correct use of this module.

Expansion capability

GL20 analog inputs/outputs

GL20-4AD

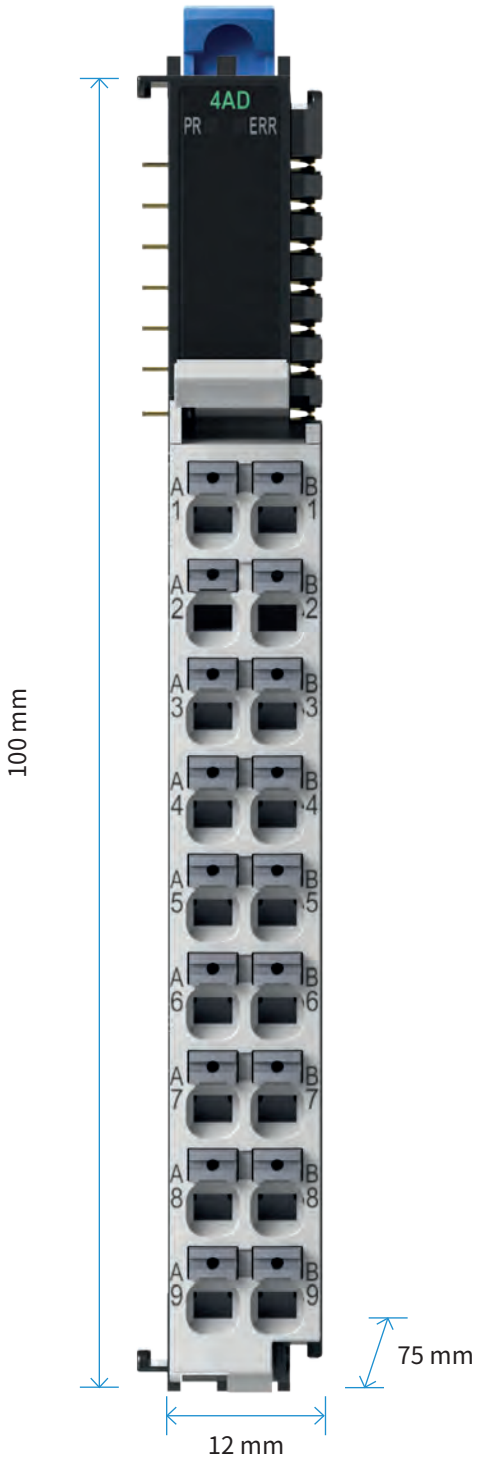

Item	Specification
Material code	**01440288**
Model	GL20-4AD
IP rating	IP20
Certification	CE & UL
Ambient temperature	-20 °C to +55 °C

Power supply	
Rated voltage of bus input power supply	5 VDC (4.75 VDC to 5.25 VDC)
Rated current of bus input power supply	120 mA (typical value at 5 V)
Rated voltage of terminal input power supply	24 VDC (20.4 VDC to 28.8 VDC)
Rated current of terminal input power supply	50 mA (typical value at 24 V)
Hot swapping function	Not supported

Input	
Input mode	Analog input
Input type	Voltage/Current
Number of input channels	4
Resolution	16-bit
Conversion time	60 us/channel
Voltage input range	±10 V, 0 V to 10 V, ±5 V, 0 V to 5 V, 1 V to 5 V
Voltage input impedance	1 MΩ
Voltage input precision (25°C)	±0.1% (full range)
Voltage input precision (full temperature range)	±0.2% (full range)
Voltage input limit	±15 V
Voltage input diagnosis	Open-circuit detection not supported
Current input range	±20 mA, 0 mA to 20 mA, 4 mA to 20 mA
Current sampling impedance	250 Ω
Current input precision (25°C)	±0.1% (full range)
Current input precision (full temperature range)	±0.2% (full range)
Current input limit	Transient: ±30 mA; Average: ±24 mA
Current input diagnosis	Open-circuit detection supported only when input current configured as 4 mA to 20 mA
Isolation	Partially isolated (The power supply is isolated from the interface. The interface is isolated from the bus, but interface channels are not isolated from each other.)

16-bit resolution

GL20-4DA

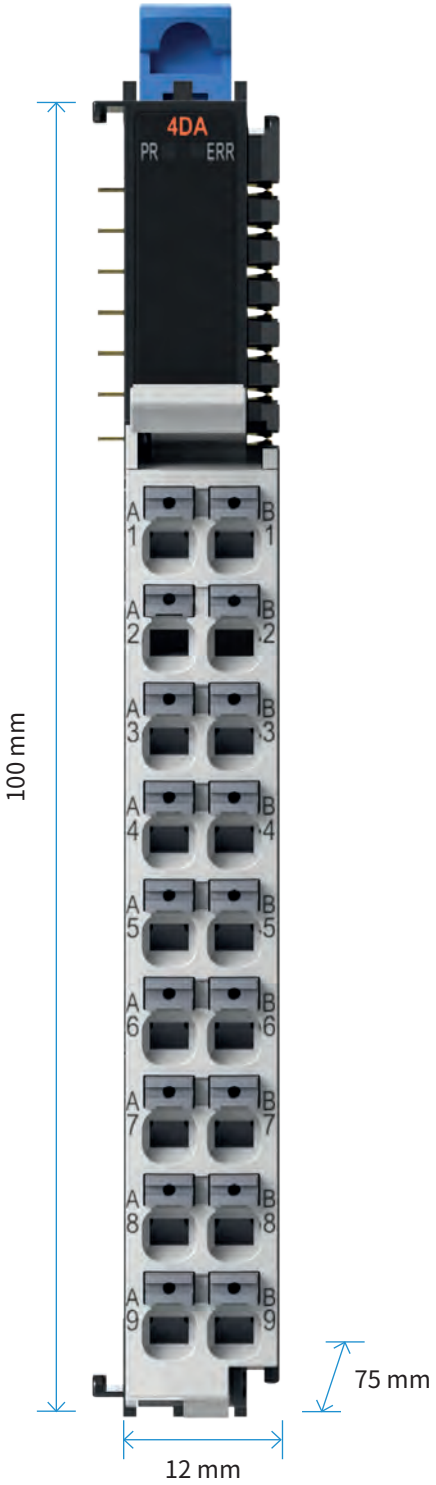

Item	Specification
Material code	**1440287**
Model	GL20-4DA
IP rating	IP20
Certification	CE & UL
Ambient temperature	-20 °C to +55 °C

Power supply	
Rated voltage of bus input power supply	5 VDC (4.75 VDC to 5.25 VDC)
Rated current of bus input power supply	120 mA (typical value at 5 V)
Rated voltage of terminal input power supply	24 VDC (20.4 VDC to 28.8 VDC)
Rated current of terminal input power supply	100 mA (typical value at 24 V)
Hot swapping function	Not supported

Output	
Output mode	Analog output
Output type	Voltage/Current
Number of output channels	4
Resolution	16-bit
Conversion time	60 us/channel
Voltage output range	±10 V, 0 V to 10 V, ±5 V, 0 V to 5 V, 1 V to 5 V
Voltage output load	1 kΩ
Voltage output precision (25°C)	±0.1% (full range)
Voltage output precision (full temperature range)	±0.5% (full range)
Voltage output diagnosis	Open-circuit detection and over-temperature protection supported
Current output range	0 mA to 20 mA, 4 mA to 20 mA
Current output load	0 Ω to 600 Ω
Current output precision (25°C)	±0.1% (full range)
Current output precision (full temperature range)	±0.5% (full range)
Current output diagnosis	Open-circuit detection and over-temperature protection supported
Isolation	Partially isolated (The power supply is isolated from the interface. The interface is isolated from the bus, but interface channels are not isolated from each other.)

16-bit resolution

Expansion capability

GL20 temperature detection

GL20-4TC

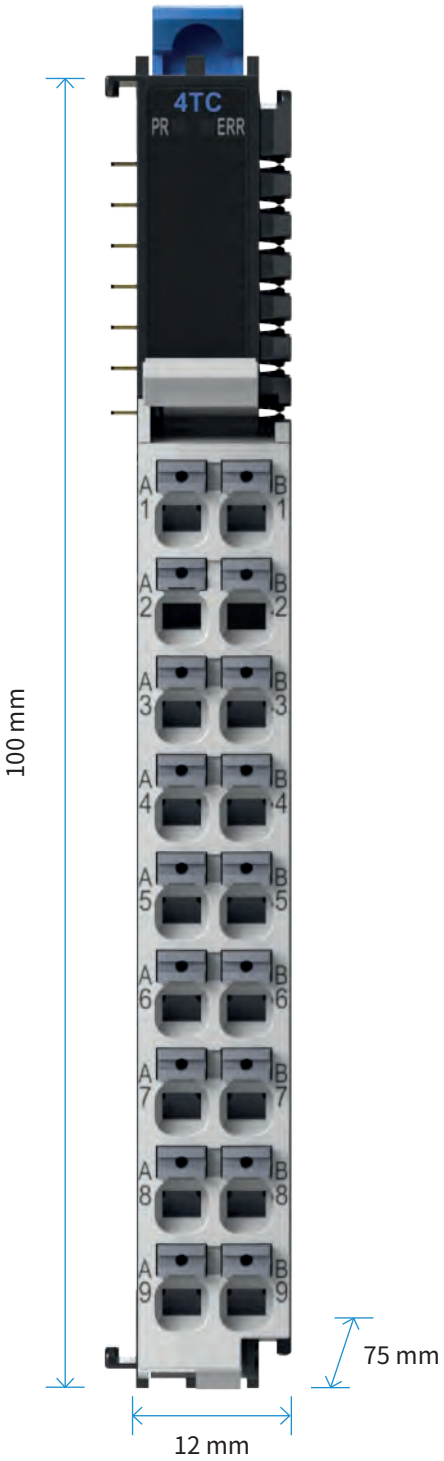

24-bit resolution

Item	Specification
Material code	**01440338**
Model	GL20-4TC
IP rating	IP20
Certification	CE & UL
Ambient temperature	-20°C to +55°C

Power supply	
Rated voltage of bus input power supply	5 VDC (4.75 VDC ~ 5.25 VDC)
Rated current of bus input power supply	85 mA (typical at 5 V)
Rated voltage of terminal input power supply	24 VDC (20.4 VDC ~ 28.8 VDC)
Rated current of terminal input power supply	100 mA (typical at 24 V)
Module hot swap function	Not supported
24V input anti-reverse	Supported

Input	
Input channels	4 way
Digital resolution	24 bit
Display sensitivity	0.1°C, 0.1°F
Input terminal	Thermocouple input, thermocouple type: B, E, N, J, K, R, S, T
Compensation method	Internal cold junction compensation
Accuracy (25°C)	(±0.1%)±1°C (±100 mV full scale) + cold junction compensation error. Only ADC sampling accuracy is defined here. For specific temperature measurement accuracy, see user manual.
Accuracy (operating temperature –20°C to 55°C)	(±0.3%)±1°C (±100 mV full scale) + cold junction compensation error. Only ADC sampling accuracy is defined here. For specific temperature measurement accuracy, see user manual.
Isolation	Isolation between I/O terminals and power supply. No isolation between channels.
Input action display	None
Input derating	None
Overrun disconnection detection	Support

GL20-4PT

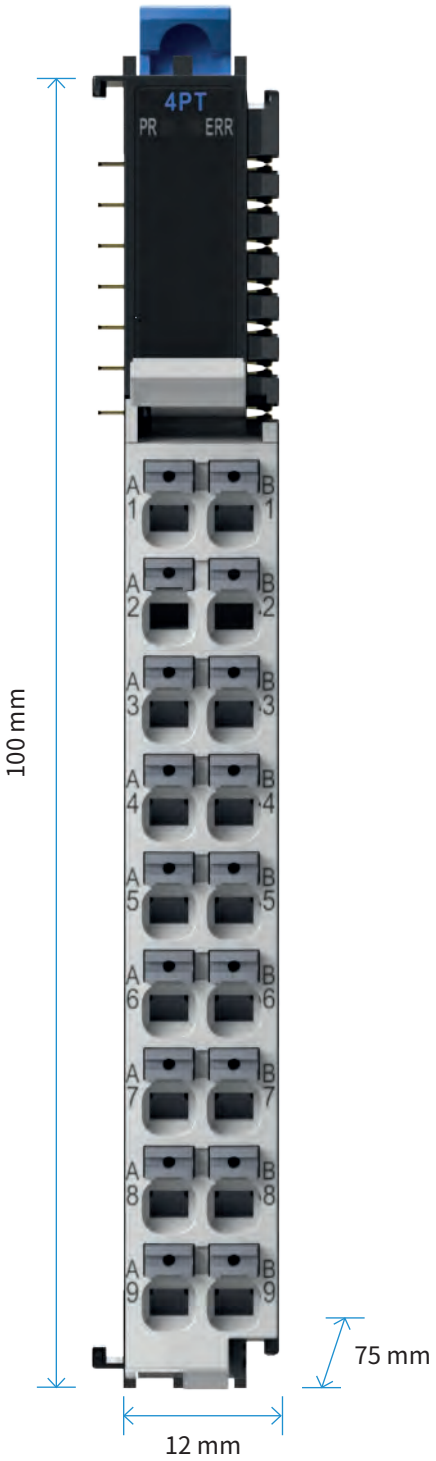

24-bit resolution

Item	Specification
Material code	**01440337**
Model	GL20-4PT
IP rating	IP20
Certification	CE & UL
Ambient temperature	-20°C to +55°C

Power supply	
Rated voltage of bus input power supply	5 VDC (4.75 VDC ~ 5.25 VDC)
Rated current of bus input power supply	85 mA (typical at 5 V)
Rated voltage of terminal input power supply	24 VDC (20.4 VDC ~ 28.8 VDC)
Rated current of terminal input power supply	100 mA (typical at 24 V)
Module hot swap function	Not supported
24V input anti-reverse	Supported

Input	
Input channels	4 way
Digital resolution	24 bit
Display sensitivity	0.1°C, 0.1°F
Input terminal	4-channel thermal resistor input
Sensor type	Pt100, Pt500, Pt1000, Cu100, KTY84, NTC5K , NTC10K.
Wiring	Two-wire/three-wire
Accuracy (25°C)	(±0.1%), (0 mV to 1000 mV full scale). Only ADC sampling accuracy is defined here. For specific temperature measurement accuracy, see user manual.
Accuracy (operating temperature –20°C to 55°C)	(±0.3%), (0 mV to 1000 mV full scale). Only ADC sampling accuracy is defined here. For specific temperature measurement accuracy, see user manual.
The sampling period	250 ms, 500 ms, 1,000 ms /4 channels (configurable by software)
Filter time	0s...100s (configurable by software, default 5s)
Isolation	Isolation between I/O terminals and power supply Isolation between channels

External dimensions

GL20 modules and accessories

GL20-RTU-ECT, GL20-RTU-PN

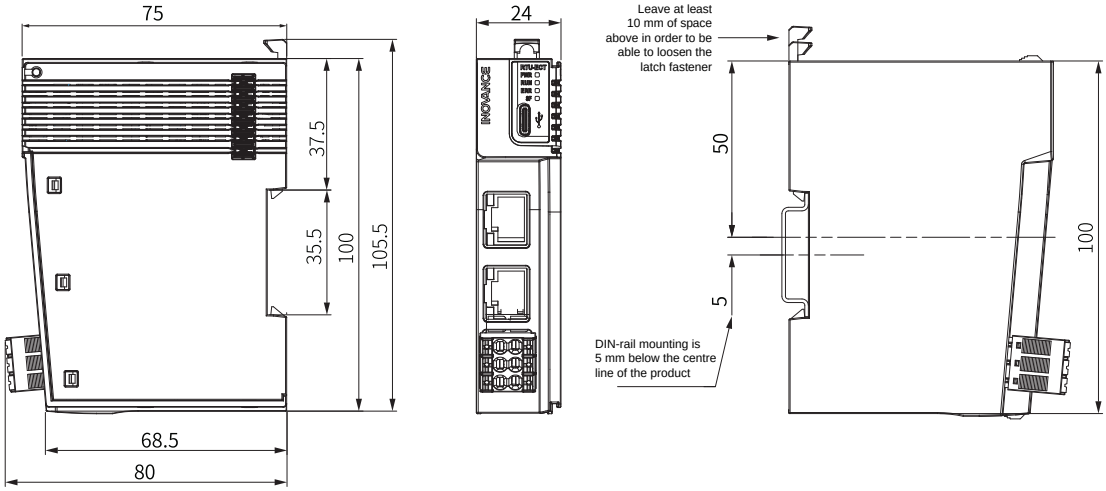

GL20-0008R, GL20-3200END, GL20-0032ETN

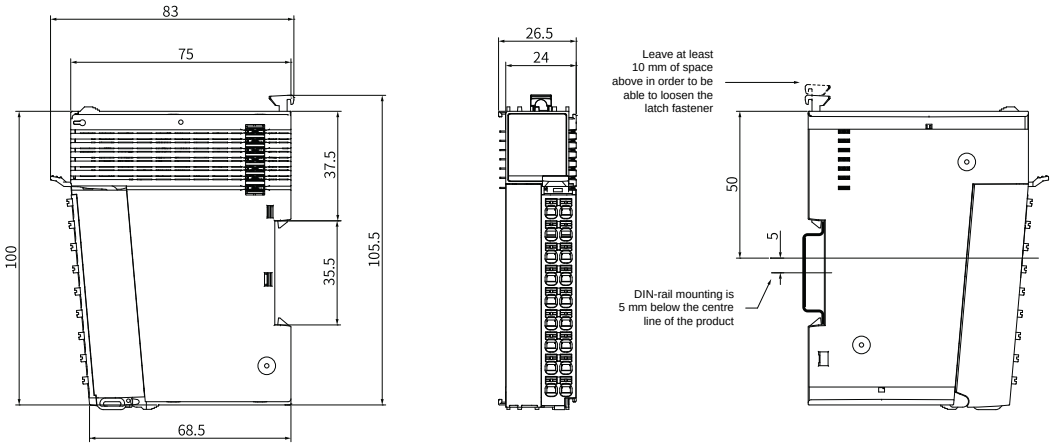

GL20-3232ETN-M

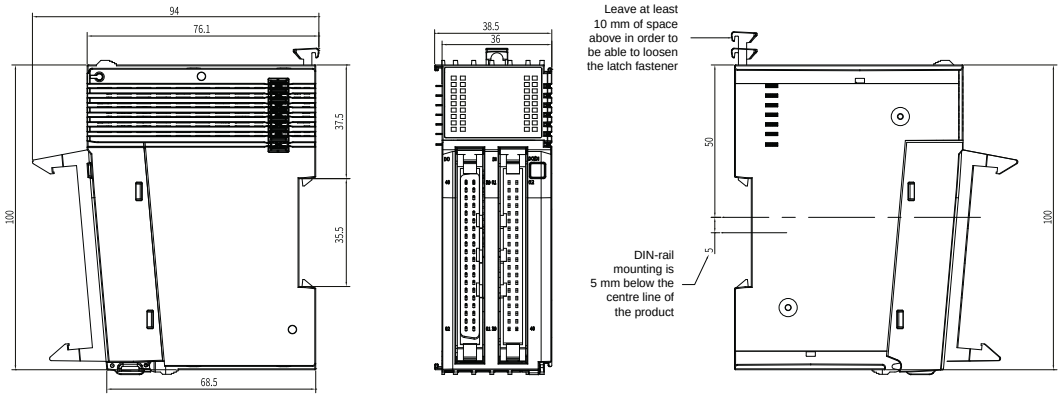

GL20-1600END, GL20-0800END, GL20-0008ETP, GL20-0016ETP, GL20-0016ETN, GL20-0808ETN, GL20-4AD, GL20-4DA, GL20-4PT, GL20-4TC

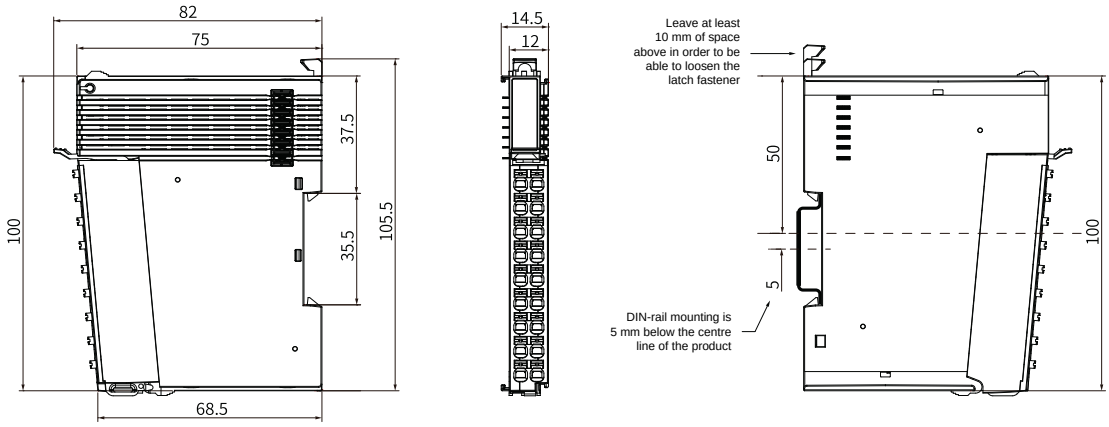

Please note: GL20-008ER, GL20-3200END, GL20-0032ETN-M, GL20-3232ETN are a larger size.
Details are available in the separate GL20 brochure.

GL20-3200END-M, GL20-0032ETN-M

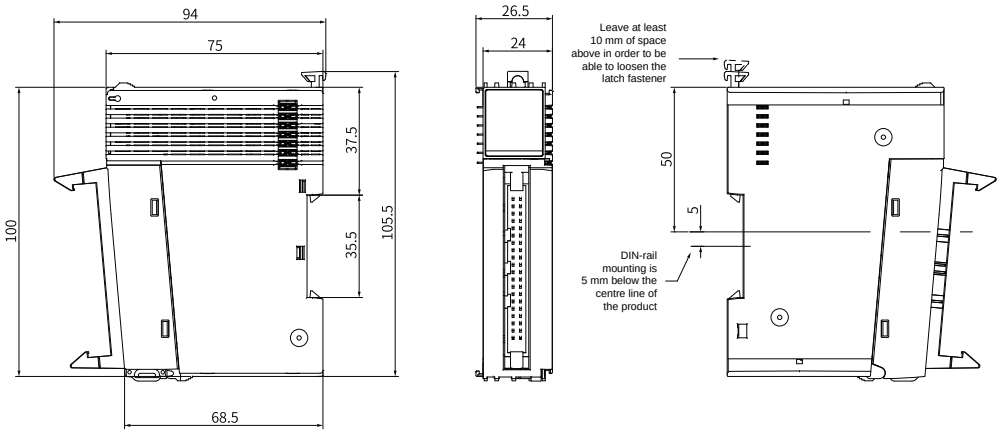

T024-K

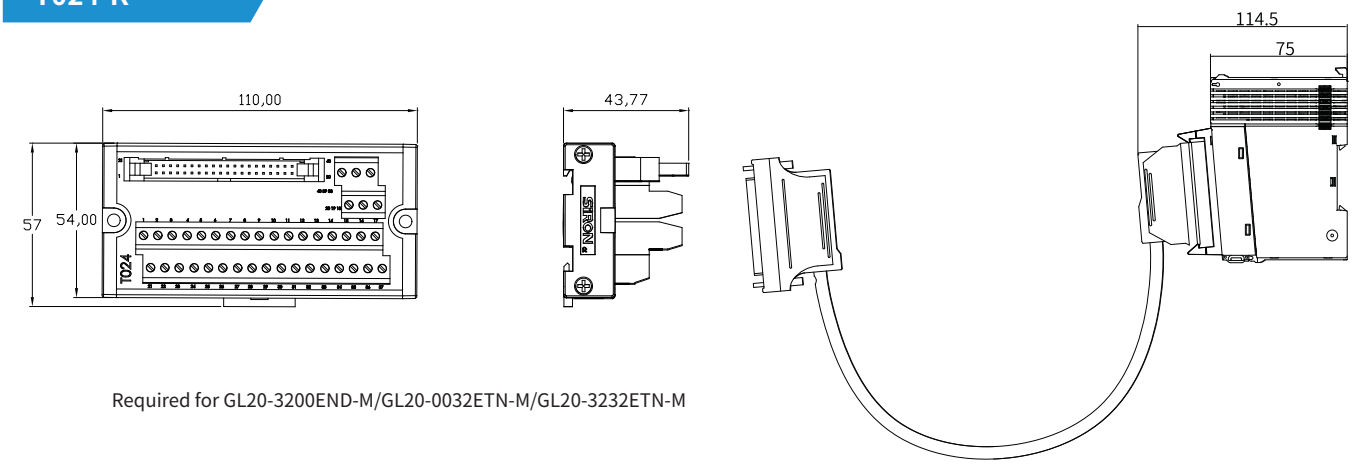

Required for GL20-3200END-M/GL20-0032ETN-M/GL20-3232ETN-M

Selection chart

GL20 modules and accessories

Type	Model	Product code	CE	UL
BUS COUPLER	**GL20-RTU-ECT**	01440286	YES	YES
	GL20-RTU-PN	01440289	YES	YES
DIGITAL INPUT	**GL20-1600END**	01440291	YES	YES
	GL20-0800END	01440381	YES	YES
	GL20-3200END	01440466	YES	
	GL20-3200END-M	01440378	YES	
DIGITAL OUTPUT	**GL20-0008ETP**	01440380	YES	YES
	GL20-0008ETN	01440379	YES	YES
	GL20-0016ETP	01440292	YES	YES
	GL20-0016ETN	01440293	YES	YES
	GL20-0032ETN	01440467	YES	
	GL20-0032ETN-M	01440377	YES	
RELAY	**GL20-0008ER**	01440334	YES	YES
DIGITAL IN/OUT	**GL20-0808ETN**	01440339	YES	YES
	GL20-3232ETN-M	01440290	YES	
ANALOG	GL20-4AD	01440288	YES	YES
	GL20-4DA	01440287	YES	YES
TEMPERATURE	GL20-4PT	01440337	YES	YES
	GL20-4TC	01440338	YES	YES
POWER SUPPLY EXPANSION	GL20-PS2	01440351	YES	YES
OPTIONS	XA3210A-40-L0.5M-01	15310167	YES	
	XA3210A-40-L2M-01	15310166	YES	
	T024-K	15020452	YES	

Description
EtherCAT slave bus coupler. Up to 16 expansion modules can be added
PROFINET slave bus coupler. Up to 16 expansion modules can be added
Ethernet/IP slave bus coupler. Up to 16 expansion modules can be added (Coming soon)
16 x source (PNP)/sink (NPN) digital inputs module. Input filter from 0.25 ms to 32 ms
8 x source (PNP)/sink (NPN) digital inputs module. Input filter from 0.25 ms to 32 ms
32 x source (PNP)/sink (NPN) digital inputs module. Input filter from 0.25 ms to 32 ms
32 x source (PNP)/sink (NPN) digital inputs module. Input filter from 0.25 ms to 32 ms
8 x source (PNP) transistor outputs module. Response time 100 µs
8 x sink (NPN) transistor outputs module. Response time 100 µs
16 x source (PNP) transistor outputs module. Response time 100 µs
16 x sink (NPN) transistor outputs module. Response time 100 µs
32 x sink (NPN) transistor outputs module. Response time 100 µs.
32 x sink (NPN) transistor outputs module. Response time 100 µs. (Requires T024-K terminal block and extension cable)
8 x relay outputs module. Response time 15 ms
8 x source (PNP)/sink (NPN) digital inputs and 8 x sink (NPN) transistor outputs module. Response time 100 µs. Input filter from 0.25 ms to 32 ms
32 x source (PNP)/sink (NPN) digital inputs and 32 x sink (NPN) transistor outputs module. Response time 100 µs. Input filter from 0.25 ms to 32 ms. (Requires T024-K terminal block and extension cable)
4 x analog inputs module (Resolution 16 bits, sampling time 250 µs)
4 x analog outputs module (Resolution 16 bits, sampling time 250 µs)
4 x channel thermal resistance inputs temperature detection module (Pt 100, Pt 500, Pt 1000, Cu 100, KTY 84, NTC 5K, NTC 10K)
4 x channel thermocouple inputs temperature detection module (Thermocouple type: B,E,N,J,K,R,S,T)
Extra power supply module. The rated current of the internal bus of the coupler is 2 A. If a higher current is required, a combination of the coupler and the power supply unit GL20-PS2 should be used
I/O extension cable - 0.5 m length with 2 FCN connectors (Required for GL20-3200END-M/GL20-0032ETN-M/GL20-3232ETN-M)
I/O extension cable - 2 m length with 2 FCN connectors (Required for GL20-3200END-M/GL20-0032ETN-M/GL20-3232ETN-M)
40PIN MIL screw terminal block (Required for GL20-3200END-M/GL20-0032ETN-M/GL20-3232ETN-M v)

Driven by technology

AC drives

AC MultiDrives

MV drives

Single-Axis servos

Multi-Axis servos

EtherCAT

Robotics & motion controllers

PLCs & HMIs

CNC machine tool solutions

EtherCAT

Electric vehicle inverters

For more information, please contact our local offices.

International Offices

Germany-Stuttgart
Tel: +49 (0) 7144 8990
sales.de@inovance.eu

Italy-Milano
Tel: +39 (0) 2268 22318
sales.it@inovance.eu

France-Bordeaux
Tel: +33 (0) 5594 01050
sales.fr@inovance.eu

Spain-Barcelona
Tel: +34 93 504 94 48
sales.es@inovance.eu

Turkey-Istanbul
Tel: +90 (216) 706 17 89
sales.tr@inovance.eu

South Korea-Seoul
Tel: +82 2 3489 8850
sales.kr@inovance.eu

India
Head Office Chennai Tel: +91 (0) 44 4380 0201

Ahmedabad Tel: +91 (0) 79 4003 4274

Mumbai Tel: +91 (0) 22 4971 5883

New Delhi Tel: +91 (0) 11 4165 4524

Sales Network in Kolkata, Bengaluru, Pune, Coimbatore, Hyderabad, Vadodara, Jaipur
info@inovance.ind.in

Hong Kong SAR
International export office
Tel: +852 2751 6080
info@inovance.eu

For other country distributors, contact the Hong Kong office.

Inovance Technology Companies
Shenzhen Inovance Technology Co. Ltd.
Suzhou Inovance Technology Co. Ltd.

INOVANCE
www.inovance.eu

©Inova Automation Co., Ltd. 2023. The information contained in the brochure is for guidance only.

Data code: 19120266 V0.1