INOVANCE

FORWARD, ALWAYS PROGRESSING

PS00005972 A01

GL20-1600ETP Digital Output Module

User Guide

Shenzhen Inovance Technology Co., Ltd.

Add.: Inovance Headquarters Tower, High-tech Industrial Park,
Guanlan Street, Longhua New District, Shenzhen
Tel:(0755) 2979 9595 Fax: (0755) 2961 9897
www.inovance.com

Preface

■ About This Guide

GL20-0016ETP series 16-channel digital PNP transistor output module can be used together with a PLC master such as Easy series.

This guide describes the mechanical installation, electrical installation and programming examples of the product.

■ Standard Compliance

The following table lists the certifications, directives, and standards that the product may comply with. For details about the acquired certificates, see the certification marks on the product nameplate.

Certification	Directive		Standard Compliance
CE certification	EMC directive	2014/30/EU	**24 VDC products** EN 61131-2 **220 VAC products** EN 61131-2 EN 61000-3-2 EN 61000-3-3
	LVD directive	2014/35/EU	EN 61010-1 EN 61010-2-201
	RoHS directive	2011/65/EU amended by (EU) 2015/863	EN IEC 63000
UL/cUL certification	-		UL 61010-1 UL 61010-2-201 UL 61010-2-030 CAN/CSA-C22.2 No. 61010-1 CSA C22.2 NO. 61010-2-201 CSA C22.2 NO. 61010-2-030

Certification	Directive	Standard Compliance
KCC Certification	-	-
EAC certification	-	-

More Data

Data Name	Data Code	Description
GL20-RTU-ECT Communication Interface Module User Guide	PS00004985	This guide describes the installation, wiring and more of the product.

Revision History

Date	Version	Description
July 2022	A01	Minor corrections
June 2022	A00	First release.

How to Obtain

This guide is not delivered with the product. You can obtain the PDF version by the following method:

Log in to Inovance's website (*http://en.inovance.cn/*), choose **Support** > **Download**, search by keyword, and then download the PDF file.

Safety Instructions

■ Safety Precautions

1. Read and comply with the safety instructions during installation, operation, and maintenance on the equipment.
2. To ensure the safety of humans and the products, follow the marks on the products and all the safety instructions in this document.
3. The “CAUTION,” “WARNING,” and "DANGER” signs are only supplements to the safety instructions.
4. Use this equipment according to the designated environment requirements. Damage caused by improper use is not covered by warranty.
5. Inovance shall take no responsibility for any personal injuries or property damage caused by improper use.

■ Safety Levels and Definitions

Danger: Indicates that failure to comply with the notice will result in severe personal injuries or even death.

Warning: Indicates that failure to comply with the notice may result in severe personal injuries or even death.

Caution: Indicates that failure to comply with the notice may result in minor or moderate personal injuries or damage to the equipment. Please keep this guide well so that it can be read when necessary and forward this guide to the end user.

During Control System Design
Danger • Provide a safety circuit outside the PLC so that the control system can still work safely once external power failure or PLC fault occurs. • Add a fuse or circuit breaker because the module may smoke or catch fire due to long-time overcurrent caused by operation above rated current or load short-circuit.

Warning

- An emergency stop circuit, a protection circuit, a forward/reverse operation interlocked circuit, and a upper position limit and lower position limit interlocked circuit must be set in the external circuits of PLC to prevent damage to the machine.
- To ensure safe operation, for the output signals that may cause critical accidents, design external protection circuit and safety mechanism;
- Once PLC CPU detects abnormality in the system , all outputs may be closed; however, when a fault occurs in the controller circuit, the output may not be under control. Therefore, it is necessary to design an appropriate external control circuit to ensure normal operation;
- If the PLC output units such as relays or transistors are damaged, the output may fail to switch between ON and OFF states according to the commands;
- The PLC is designed to be used in indoor electrical environment (overvoltage category II). The power supply must have a system-level lightning protection device, assuring that overvoltage due to lightning shock cannot be applied to the PLC power supply input terminals, signal input terminals and output terminals and so forth, so as to avoid damage to the equipment.

Installation

Warning

- Installation must be carried out by the specialists who have received the necessary electrical training and understood enough electrical knowledge.
- Disconnect all external power supplies of the system before removing/installing the module. Failure to do so may result in electric shock, module fault or malfunction.
- Do not use the PLC where there are dust, oil smoke, conductive dust, corrosive or combustible gases, or exposed to high temperature, condensation, wind & rain, or subject to vibration and impact. Electric shock, fire and malfunction may also result in damage or deterioration to the product.
- The PLC is open-type equipment that must be installed in a control cabinet with lock (cabinet housing protection > IP20). Only the personnel who have received the necessary electrical training and understood enough electrical knowledge can open the cabinet.

Caution

- Prevent metal filings and wire ends from dropping into ventilation holes of the PLC during installation. Failure to comply may result in fire, fault and malfunction.
- Ensure there are no foreign matters on ventilation surface. Failure to comply may result in poor ventilation, which may cause fire, fault and malfunction.
- Ensure the module is connected to the respective connector securely and hook the module firmly. Improper installation may result in malfunction, fault or fall-off.

Wiring

Danger

- Wiring must be carried out by personnel who have received the necessary electrical training and understood enough electrical knowledge.
- Disconnect all external power supplies of the system before wiring. Failure to comply may result in electric shock, module fault or malfunction.
- Install the terminal cover attached to the product before power-on or operation after wiring is completed. Failure to comply may result in electric shock.
- Perform good insulation on terminals so that insulation distance between cables will not reduce after cables are connected to terminals. Failure to comply may result in electric shock or damage to the equipment.

Caution

- To avoid electric shock, cut off the power supply before connecting the product to the power supply.
- The input power of the product is 24 VDC. If the power input is not within 24 VDC±20%, the product may be damaged. Therefore, check regularly that the DC power provided by the switching-mode power supply unit is stable.

During Operation and Maintenance

Caution

- Maintenance & inspection must be carried out by personnel who have the necessary electrical training and experience.
- Do not touch the terminals while the power is on. Failure to comply may result in electric shock or malfunction.
- Disconnect all external power supplies of the system before cleaning the module or re-tightening screws on the terminal block or screws of the connector. Failure to comply may result in electric shock.
- Disconnect all external power supplies of the system before removing the module or connecting/removing the communication wirings. Failure to comply may result in electric shock or malfunction.

Safety Recommendations

- On-site manual devices or other backup means must be equipped in the position where the operator directly touches the mechanical parts, such as loading and unloading mechanical tools, or the position where the machine runs automatically. The manual devices and backup means, which can start or interrupt automatic operations of the system, must be independent of the programmable controller.
- If you need to modify the program while the system is running, use the lock function or other protective measures. Ensure that only authorized personnel can make the necessary modifications.

Disposal

Caution

- Treat the scrapped product as industrial waste. Dispose of the battery according to local laws and regulations.
- Recycle retired equipment by observing industry waste disposal standards to avoid environmental pollution.

1 产品信息

1.1 Model Number and Nameplate

GL 20 -00 16 E TP

① ② ③ ④ ⑤ ⑥

① **Product Information** GL: General local module	③ **I/O Points** 00: Zero input	⑤ **Module Type** E: Logic I/O expansion module
② **Serial Number** 20: 20 series module	④ **I/O Points** 16: 16 outputs	⑥ **Output type** R: Relay output TP: Transistor output (sourcing) TN: Transistor output (sinking)

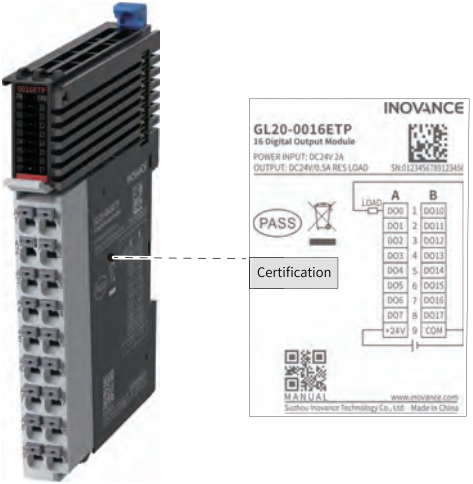

Based on the above description of model number and nameplate, the relevant ordering data of this product is described in the following table.

Model	Description	Product Code	Applicable Model
GL20-0016ETP	GL20 series 16-channel digital transistor output module	01440292	AC800 series, Easy series

1.2 Components

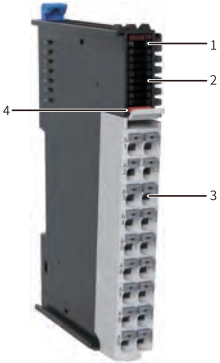

No.	Name	Description			
1	Signal indicators	PR (POWER +RUN)	Power / running indicator	Yellow green	• ON when the module is in normal operation • Flashes when the module is preparing or stopped • OFF when the module is faulty
		ERR	Error indicator	Red	ON when hardware error occurs
2	I/O signal indicator	Corresponds to various input signals ON: input active OFF: input inactive			
3	Terminals	See Terminal Definition for detailed definition			

No.	Name	Description	
4	Color identification	Red: Digital output	Orange: Analog output
		Gray: Digital input	Green: Analog input
		White: Communication	Blue: Other module

1.3 Specifications

■ Power supply specifications

Item	Specification
Rated bus input voltage	5 VDC (4.75 VDC to 5.25 VDC)
Rated bus input current	85 mA (typical@5 V)
Rated terminal input voltage	24 VDC (20.4 VDC to 28.8 VDC)
Rated terminal input current	2 A (typical@24 V)
Rated terminal output voltage	N/A
Rated terminal output current	N/A
Hot swap	Not supported

■ Output specifications

Item	Specification
Output type	Digital output, high side
Output mode	Sourcing
Output channels	16
Output voltage class	24 VDC±10% (21.6 VDC to 26.4 VDC)
Output load (resistive load)	0.5 A/ point, 2 A/ module
Output load (inductive load)	7.2 W/ point, 12 W/ module
Output load (lamp load)	5 W/ point, 18 W/ module
ON/OFF response time	100 us/100 us
Leakage current at OFF	10 uA

Item	Specification
Switching frequency	100 Hz with resistive load, 0.5 Hz with inductive load, 10 Hz with lamp load
Isolation	Yes
Output action display	Output indicators are turned ON (via software control) when the outputs are in the driving state
Output derating	50% derating at 55°C (the output current does not exceed 1A when all outputs are ON), or 10°C derating when all outputs are ON
Protection function	Short circuit protection, overcurrent protection

■ Software specifications

Item	Specification
Output mode upon stop	Output zero, output last value, output preset value
Preset value	0 or 1
Output port anomaly detection and indication	N/A
Output channel logic level configuration	Not supported
Independent channel enable configuration	Not supported
Diagnostic report configuration	Not supported
When in stop mode	Output according to output mode upon stop and present value, no refresh

2 Mechanical Installation

2.1 Mounting Dimensions

■ Module

The mounting dimensions (in mm) are shown in the figure below.

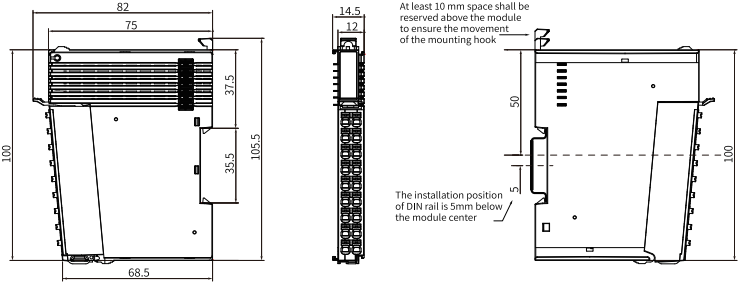

■ Cable Connection

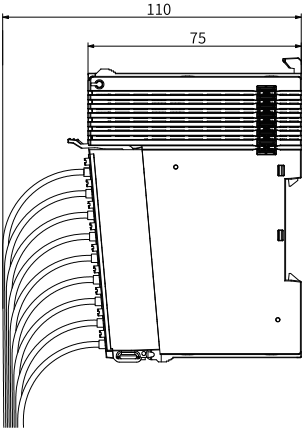

2.2 Installation Method

■ Installing Modules Side-by-Side

You can install multiple modules side by side with the help of top and bottom guides on the modules, as shown below.

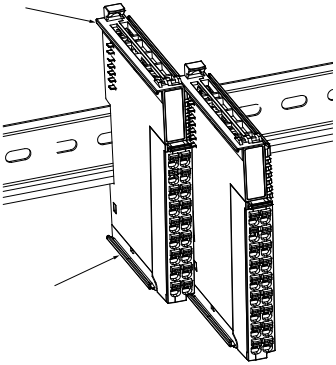

■ Installing Module onto DIN Rail

You can install the module onto a DIN rail. Align the module with the DIN rail and push the module in the direction indicated by the arrow until you hear a click, as shown below.

Note: After the module is installed, the DIN rail mounting hook will automatically move downward to lock the module to the rail. If the hook does not move downward, press down the top of the hook to ensure that the module is installed in place.

Mount an end plate on either side of the module assembly. To mount the end plate, hook the bottom of it to the bottom of the DIN rail, rotate the end plate to hook the top of it to the top of the DIN rail, and then tighten the screw to lock the end plate in place, as shown below.

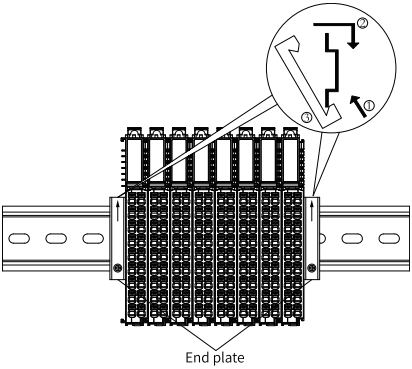

■ Removing Module

Pry the DIN rail mounting hook upwards with a tool such as slotted screwdriver, hold the protrusions and pull the module out straight forward, and then press down the top of the DIN rail mounting hook.

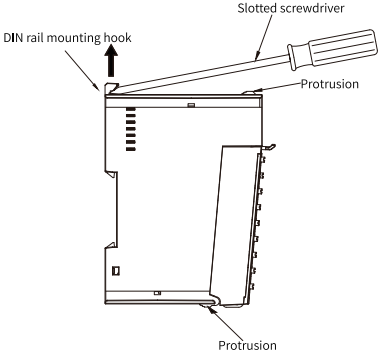

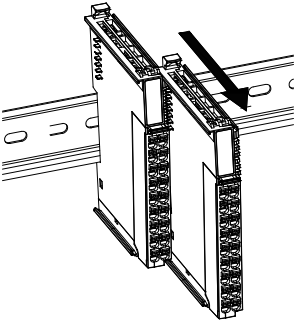

3 Electrical Installation

3.1 Cable Selection

The cable lug and cable diameter included in the following table are only for reference.

Material Name	Applicable Cable Diameter		KST		Suzhou Yuanli	
	mm^2	AWG	Model	Crimping Tool	Model	Crimping Tool
Tubular lug	0.3	22	E0308	KST2000L	0308	YAC-5
	0.5	20	E0508		0508	
	0.75	18	E7508		7508	
	1.0	18	E1008		1008	
	1.5	16	E1508		1508	

If you use other types of tubular lug, crimp the lug to the cables according to the shape and dimension requirements shown in the figure below.

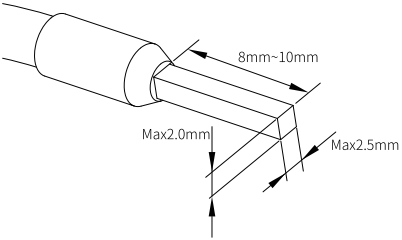

3.2 Terminal Definition

Left Indicator	Left Signal	Left Terminal	Right Terminal	Right Signal	Right Indicator
00	Y0	A1	B1	Y10	10
01	Y1	A2	B2	Y11	11
02	Y2	A3	B3	Y12	12
03	Y3	A4	B4	Y13	13
04	Y4	A5	B5	Y14	14
05	Y5	A6	B6	Y15	15
06	Y6	A7	B7	Y16	16
07	Y7	A8	B8	Y17	17
/	24 V	A9	B9	COM	/

3.3 Terminal Wiring

External Wiring

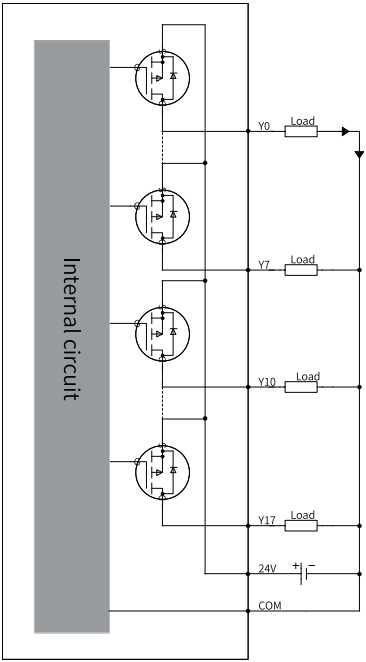
Internal circuit
Y0
Y7
Y10
Y17
24V
COM
Load
Load
Load
Load
+
−

4 Programming Examples

The following is an example where the input voltage of channel 0 of the GL20-0016ETP module is assigned to the corresponding variable, and AC802 is used as the master control module.

1. Add GL20-0016ETP module.

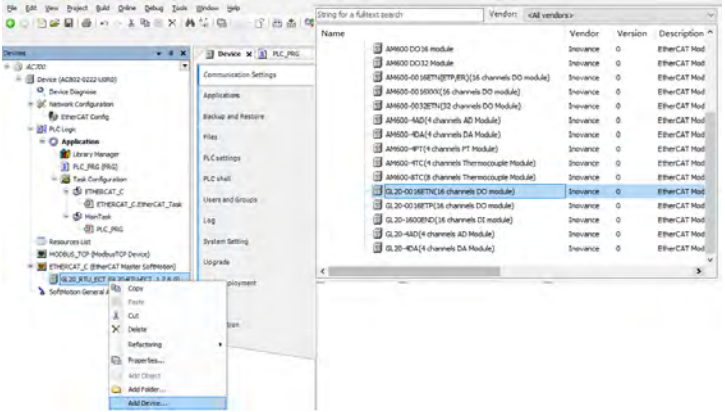

2. In **Channels Config** interface of the GL20-0016ETP module, set **Output status after stop or disconnection** of each channel.

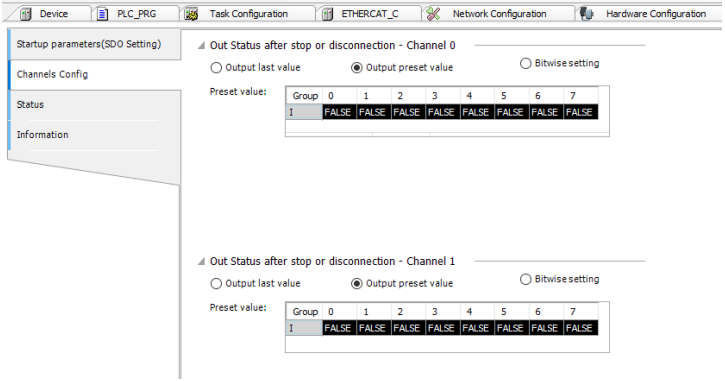

3. Define variables output_CH0 and output_CH1 with the ST programming language.

4. Map the defined variable output_CH0 to Group 0 (DO7-DO0) of the configured GL20-0016ETP module.

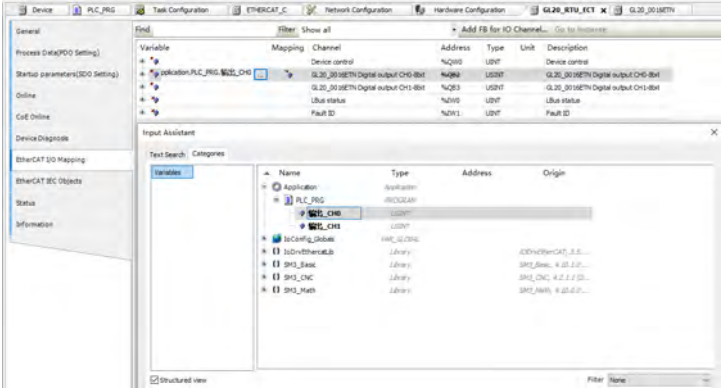

5. After successful compiling, download the project and run it.