INOVANCE

FORWARD, ALWAYS PROGRESSING

19012116A00

GL20-0808ETN DI/DO Module

User Guide

Shenzhen Inovance Technology Co., Ltd.

Add.: Inovance Headquarters Tower, High-tech Industrial Park,
Guanlan Street, Longhua New District, Shenzhen
Tel:(0755) 2979 9595 Fax: (0755) 2961 9897
www.inovance.com

Preface

■ About This Guide

GL20-0808ETN expansion module features 8-channel digital input and 8-channel NPN transistor output, and can be used together with Easy series PLC and GL20 series communication interface modules such as GL20-RTU-ECT module.

This guide describes the mechanical installation, electrical installation and programming examples of the product.

■ Standard Compliance

The following table lists the certifications, directives, and standards that the product may comply with. For details about the acquired certificates, see the certification marks on the product nameplate.

Certification	Directive		Standard Compliance
CE certification	EMC directive	2014/30/EU	**24 VDC products** EN 61131-2 **220 VAC products** EN 61131-2 EN 61000-3-2 EN 61000-3-3
	LVD directive	2014/35/EU	EN 61010-1 EN 61010-2-201
	RoHS directive	2011/65/EU amended by (EU) 2015/863	EN IEC 63000
UL/cUL certification	-		UL 61010-1 UL 61010-2-201 UL 61010-2-030 CAN/CSA-C22.2 No. 61010-1 CSA C22.2 NO. 61010-2-201 CSA C22.2 NO. 61010-2-030

Certification	Directive	Standard Compliance
KCC Certification	-	-
EAC certification	-	-

More Data

Data Name	Data Code	Description
GL20-RTU-ECT Communication Interface Module User Guide	PS00004985	This guide describes the installation, wiring and more of the product.

Revision History

Date	Version	Description
October 2022	A00	First release.

How to Obtain

This guide is not delivered with the product. You can obtain the PDF version by the following method:

- Log in to Inovance's website (*http://en.inovance.cn/*), choose **Support** > **Download**, search by keyword, and then download the PDF file.
- Scan the QR code on the product with your mobile phone.

Warranty Agreement

The warranty period of the product is 18 months as of the date of manufacture (refer to the barcode on the equipment). If otherwise agreed upon, the agreed terms and conditions shall prevail. After 18 months, a proper maintenance fee is charged.

Within the 18-month warranty period, a reasonable repair fee will be charged for damages caused by the following:

- Operations not following the user instructions
- Fire, flood, or abnormal voltage

- Use of the product for non-recommended functions
- Use of the product outside the scope of intended use
- Force majeure such as natural disasters, earthquake, lightning strike

The maintenance fee is charged according to the latest Price List of Inovance. If otherwise agreed upon, the agreed terms and conditions shall prevail.

For details, see Product Warranty Card.

General Safety Instructions

■ Safety Precautions

1. Before installing, using, and maintaining this equipment, read the safety information and precautions thoroughly, and comply with them during operations.
2. To ensure the safety of humans and equipment, follow the signs on the equipment and all the safety instructions in this user guide.
3. "CAUTION", "WARNING", and "DANGER" items in the guide only indicate some of the precautions that need to be followed; they just supplement the safety precautions.
4. Use this equipment according to the designated environment requirements. Damage caused by improper use is not covered by warranty.
5. Inovance shall take no responsibility for any personal injuries or property damage caused by improper use.

■ Safety Levels and Definitions

Danger: Indicates that failure to comply with the notice will result in severe personal injuries or even death.

Warning: Indicates that failure to comply with the notice may result in severe personal injuries or even death.

Caution: Indicates that failure to comply with the notice may result in minor or moderate personal injuries or damage to the equipment. Please keep this guide well so that it can be read when necessary and forward this guide to the end user.

During Control System Design
Danger • Provide a safety circuit outside the PLC so that the control system can still work safely once external power failure or PLC fault occurs. • Add a fuse or circuit breaker because the module may smoke or catch fire due to long-time overcurrent caused by operation above rated current or load short-circuit.

Warning

- An emergency stop circuit, a protection circuit, a forward/reverse operation interlocked circuit, and a upper position limit and lower position limit interlocked circuit must be set in the external circuits of PLC to prevent damage to the machine.
- To ensure safe operation, for the output signals that may cause critical accidents, design external protection circuit and safety mechanism;
- Once PLC CPU detects abnormality in the system , all outputs may be closed; however, when a fault occurs in the controller circuit, the output may not be under control. Therefore, it is necessary to design an appropriate external control circuit to ensure normal operation;
- If the PLC output units such as relays or transistors are damaged, the output may fail to switch between ON and OFF states according to the commands;
- The PLC is designed to be used in indoor electrical environment (overvoltage category II). The power supply must have a system-level lightning protection device, assuring that overvoltage due to lightning shock cannot be applied to the PLC power supply input terminals, signal input terminals and output terminals and so forth, so as to avoid damage to the equipment.

Installation

Warning

- Installation must be carried out by the specialists who have received the necessary electrical training and understood enough electrical knowledge.
- Disconnect all external power supplies of the system before removing/installing the module. Failure to do so may result in electric shock, module fault or malfunction.
- Do not use the PLC where there are dust, oil smoke, conductive dust, corrosive or combustible gases, or exposed to high temperature, condensation, wind & rain, or subject to vibration and impact. Electric shock, fire and malfunction may also result in damage or deterioration to the product.
- The PLC is open-type equipment that must be installed in a control cabinet with lock (cabinet housing protection > IP20). Only the personnel who have received the necessary electrical training and understood enough electrical knowledge can open the cabinet.

Caution

- Prevent metal filings and wire ends from dropping into ventilation holes of the PLC during installation. Failure to comply may result in fire, fault and malfunction.
- Ensure there are no foreign matters on ventilation surface. Failure to comply may result in poor ventilation, which may cause fire, fault and malfunction.
- Ensure the module is connected to the respective connector securely and hook the module firmly. Improper installation may result in malfunction, fault or fall-off.

Wiring

Danger

- Wiring must be carried out by personnel who have received the necessary electrical training and understood enough electrical knowledge.
- Disconnect all external power supplies of the system before wiring. Failure to comply may result in electric shock, module fault or malfunction.
- Perform good insulation on terminals so that insulation distance between cables will not reduce after cables are connected to terminals. Failure to comply may result in electric shock or damage to the equipment.

Caution

- To avoid electric shock, cut off the power supply before connecting the product to the power supply.
- The power supply must meet the specifications provided in the user guide. If the power input is not within the specified range, the product may be damaged. Therefore, check regularly that the DC power provided by the switching-mode power supply unit is stable.

During Operation and Maintenance

Caution

- Maintenance & inspection must be carried out by personnel who have the necessary electrical training and experience.
- Do not touch the terminals while the power is on. Failure to comply may result in electric shock or malfunction.
- Disconnect all external power supplies of the system before cleaning the module. Failure to comply may result in electric shock.
- Disconnect all external power supplies of the system before removing the module or connecting/removing the communication wirings. Failure to comply may result in electric shock or malfunction.

Safety Recommendations

- On-site manual devices or other backup means must be equipped in the position where the operator directly touches the mechanical parts, such as loading and unloading mechanical tools, or the position where the machine runs automatically. The manual devices and backup means, which can start or interrupt automatic operations of the system, must be independent of the programmable controller.
- If you need to modify the program while the system is running, use the lock function or other protective measures. Ensure that only authorized personnel can make the necessary modifications.

Disposal

Caution

- Treat the scrapped product as industrial waste. Dispose of the battery according to local laws and regulations.
- Recycle retired equipment by observing industry waste disposal standards to avoid environmental pollution.

1 Product Information

1.1 Model Number and Nameplate

GL 20 -08 08 E TN

① ② ③ ④ ⑤ ⑥

① **Product Information** GL: General local module	③ **I/O Points** 8 inputs	⑤ **Module Type:** Logic I/O expansion module
② **Serial Number** 20: 20 series module	④ **I/O Points** 8 outputs	⑥ **Output Type** Transistor output (sinking)

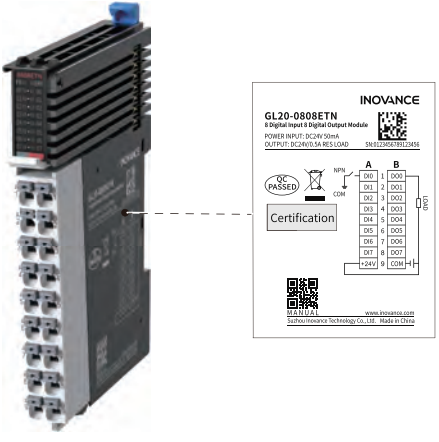

Based on the above description of model number and nameplate, the relevant ordering data of this product is described in the following table.

Model	Description	Product Code	Applicable Model
GL20-0808ETN	GL20 series module with 8-channel digital input and 8-channel NPN transistor output	01440339	GL20 communication interface module, Easy series

1.2 Components

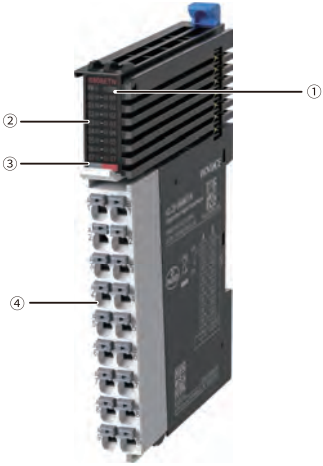

No.	Name	Description			
①	Signal indicators	PR (POWER +RUN)	Power / running indicator	Yellow green	• ON: The module is in normal operation. • Flashing quickly: The module is addressed successfully. • Flashing slowly: The module is powered on but not addressed. • OFF: The module is not powered on or is faulty.
		ERR	Error indicator	Red	Module fault
②	I/O signal indicator	00 to 07	I/O signal indicator	Yellow green	• ON: Input/Output active • OFF: Input/Output inactive
③	Color identification		Red: Digital output		Orange: Analog output
			Gray: Digital input		Green: Analog input
			White: Communication		Blue: Other module
④	I/O terminal	/	8 inputs and 8 outputs	/	For detailed definitions, see *"3.2 Terminal Definition" on page 19*

Note

- Flashing quickly: on for 200 ms followed by off for 200 ms.
- Flashing slowly: on for 200 ms followed by off for 1000 ms.

1.3 Specifications

■ Power supply specifications

Item	Specification
Rated bus input voltage	5 VDC (4.75 VDC to 5.25 VDC)
Rated bus input current	85 mA (typical@5 V)
Rated terminal input voltage	24 VDC (20.4 VDC to 28.8 VDC)
Rated terminal input current	50 mA (typical@24 V)
Rated terminal output voltage	N/A
Rated terminal output current	N/A
Hot swap	Not supported

■ Input specifications

Item	Specification
Input type	Digital input
Input mode	Sinking
Input channels	8
Input voltage class	24 VDC±10% (21.6 VDC to 26.4 VDC)
Input current (typical)	4 mA (typical@24 V)
ON voltage	15 VDC
OFF voltage	<5 VDC
ON/OFF response time	100 us/100 us
Software filter time	Supported
Input impedance	Reference: 5.3k to 5.6k
Isolation	Yes

Item	Specification
Input action display	Input indicators are turned ON (via software control) when the inputs are in the driving state
Input derating	50% derating at 55°C (the number of ON inputs does not exceed 4), or 10°C derating when all inputs are ON

■ Output specifications

Item	Specification
Output type	Digital output, NPN
Output mode	Sinking
Output channels	8
Output voltage class	24 VDC±10% (21.6 VDC to 26.4 VDC)
Output load (resistive load)	0.5 A/ point, 2 A/ module
Output load (inductive load)	7.2 W/ point, 12 W/ module
Output load (lamp load)	5 W/ point, 9 W/ module
ON/OFF response time	100 us/100 us
Leakage current at OFF	10 uA
Switching frequency	100 Hz with resistive load, 0.5 Hz with inductive load, 10 Hz with lamp load
Isolation	Yes
Output action display	Output indicators are turned ON (via software control) when the outputs are in the driving state
Output derating	50% derating at 55°C (the output current does not exceed 1A when all outputs are ON), or 10°C derating when all outputs are ON
Protection function	Short circuit protection, overcurrent protection

■ Software specifications

Item	Specification
Output mode upon stop	Output zero, output last value, output preset value
Preset value	0 or 1
Output port anomaly detection and indication	N/A
Output channel logic level configuration	Not supported
Independent channel enable configuration	Not supported
Diagnostic report configuration	Not supported
When in stop mode	Output according to output mode upon stop and present value, no refresh

Note

Stop at fault refers to:

- Background start/stop;
- The bus of GL20 communication interface module is out of communication due to disconnection of the network cable or manual state switching;
- The local bus stops operation.

2 Mechanical Installation

2.1 Mounting Dimensions

■ Module

The mounting dimensions (in mm) are shown in the figure below.

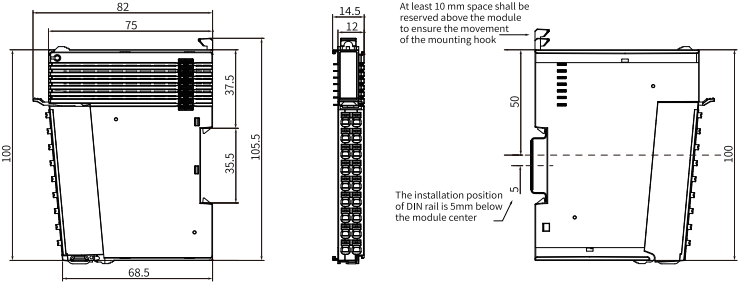

■ Cable Connection

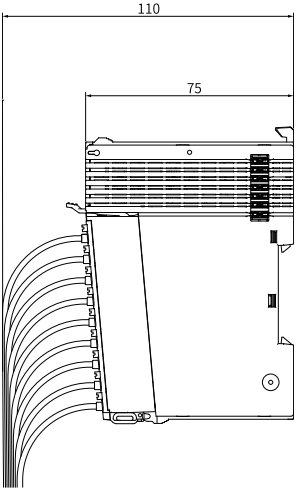

2.2 Installation Method

■ Installing Modules Side-by-Side

The module is mounted onto a DIN rail in conformity with IEC 60715 (width: 35 mm, thickness: 1 mm). The dimensions (unit: mm) are shown below.

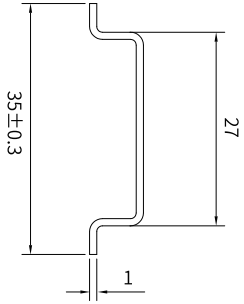

You can install multiple modules side by side with the help of top and bottom guides on the modules, as shown below.

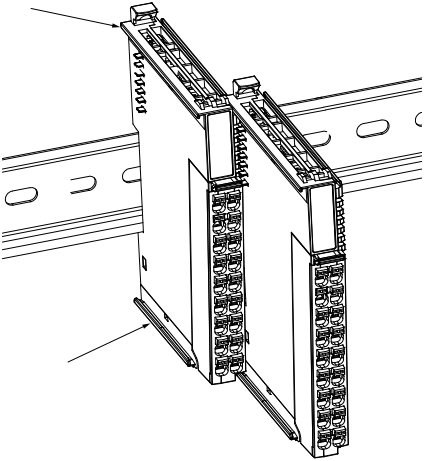

■ Installing Module onto DIN Rail

You can install the module onto a DIN rail. Align the module with the DIN rail and push the module in the direction indicated by the arrow until you hear a click, as shown below.

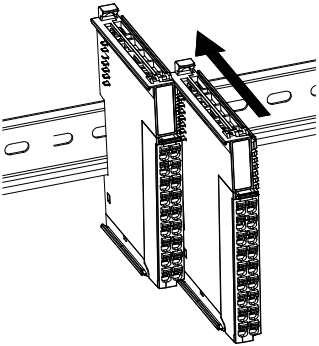

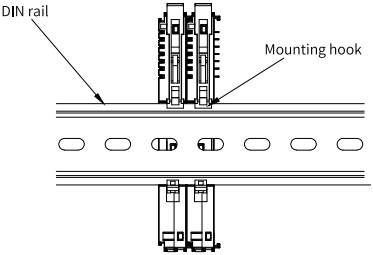

Note: After the module is installed, the DIN rail mounting hook will automatically move downward to lock the module to the rail. If the DIN rail mounting hook does not move downward, press down the top of it to ensure that the module is installed in place.

Mount an end plate on either side of the module assembly. To mount the end plate, hook the bottom of it to the bottom of the DIN rail, rotate the end plate to hook the top of it to the top of the DIN rail, and then tighten the screw to lock the end plate in place, as shown below.

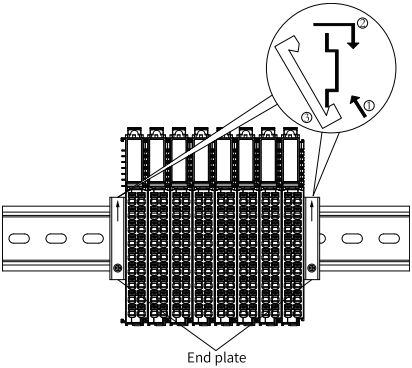

■ Removing Module

Pry the DIN rail mounting hook upwards with a tool such as slotted screwdriver, hold the protrusions and pull the module out straight forward, and then press down the top of the DIN rail mounting hook.

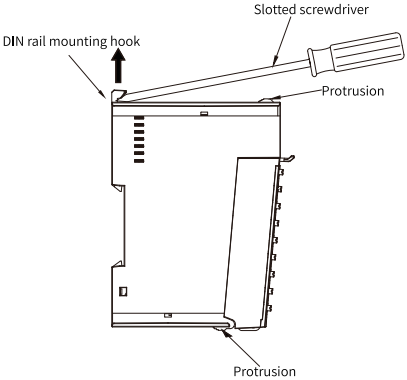

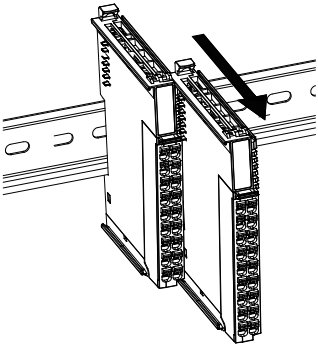

3 Electrical Installation

3.1 Cable Selection

The cable lug and cable diameter included in the following table are only for reference.

Material Name	Applicable Cable Diameter		KST		Suzhou Yuanli	
	mm^2	AWG	Model	Crimping Tool	Model	Crimping Tool
Tubular lug	0.3	22	E0308	KST2000L	0308	YAC-5
	0.5	20	E0508		0508	
	0.75	18	E7508		7508	
	1.0	18	E1008		1008	
	1.5	16	E1508		1508	

If you use other types of tubular lug, crimp the lug to the cables according to the shape and dimension requirements shown in the figure below.

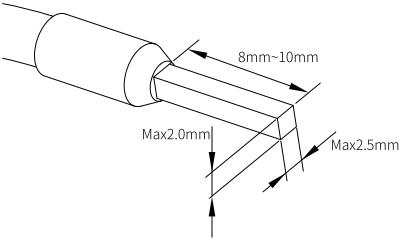

3.2 Terminal Definition

Left Indicator	Left Signal	Left Terminal	Right Terminal	Right Signal	Right Indicator
00	DI0	A1	B1	DO0	08
01	DI1	A2	B2	DO1	09
02	DI2	A3	B3	DO2	10
03	DI3	A4	B4	DO3	11
04	DI4	A5	B4	DO4	12
05	DI5	A6	B6	DO5	13
06	DI6	A7	B7	DO6	14
07	DI7	A8	B8	DO7	15
/	24 V	A9	B9	COM	/

3.3 Terminal Wiring

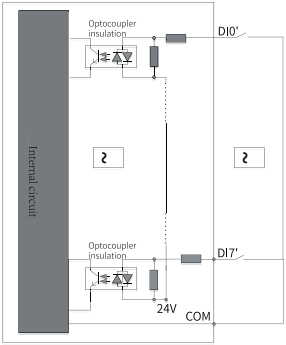

Input wiring diagram

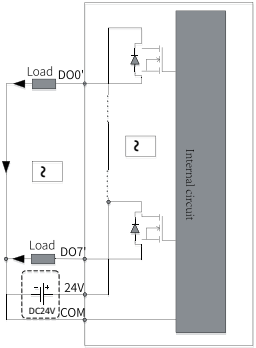

Output wiring diagram

4 Programming Examples

The following is an example where the input/output channel 0 of the GL20-0808ETN module is assigned to the corresponding variable, and AM600 is used as the master control module.

1. Add GL20-0808ETN module.

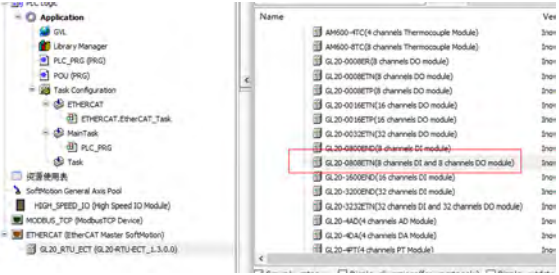

2. Double click the module and set **Out Status after stop or disconnection**.

3. Add custom variables O_CH0 and I_CH0.

	Scope	Name	Address	Data type	Initialization	Persistent	Constant	Comment	Attributes
1	VAR_GLOBAL	O_CH0		INT		☐	☐		
2	VAR_GLOBAL	I_CH0		INT		☐	☐		

4. Map the defined variables O_CH0 and I_CH0 to channel 0 of the configured module.

Variable	Mapping	Channel	Address	Type	Default Value	Unit	Description
		Device control	%QW1	UINT			Device control
Application.O_CH0		GL20_0808ETN Digital output Bbit	%QB4	USINT			GL20_0808ETN Digital output Bbit
		LBus status	%IW1	UINT			LBus status
		Fault ID	%IW2	UINT			Fault ID
Application.I_CH0		GL20_0808ETN Digital input Bbit	%IB6	USINT			GL20_0808ETN Digital input Bbit

5. Define the variables O_D0 and I_D01 with the LD programming language, as shown in the figure below.

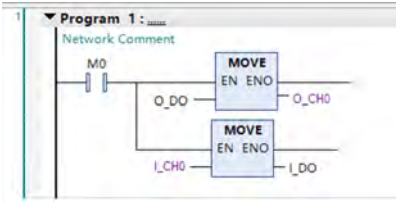

6. After successful compiling, download the project and run it.