INOVANCE

FORWARD, ALWAYS PROGRESSING

PS00004986 A01

# GL20-4DA
# Analog Output Module

## User Guide

**Shenzhen Inovance Technology Co., Ltd.**

Add.: Inovance Headquarters Tower, High-tech Industrial Park,
Guanlan Street, Longhua New District, Shenzhen
Tel:(0755) 2979 9595 Fax: (0755) 2961 9897
www.inovance.com

# Preface

## About This Guide

GL20-4DA series 4-channel analog output module supports voltage and current output with a 16-bit resolution, and can be used together with a PLC master such as Easy series.

This guide describes the mechanical installation, electrical installation and programming examples of the product.

## More Data

| Data Name | Data Code | Description |
|---|---|---|
| GL20-RTU-ECT Communication Interface Module User Guide | PS00004985 | This guide describes the installation, wiring and more of the product. |

## Revision History

| Date | Version | Description |
|---|---|---|
| June 2022 | A01 | Minor corrections |
| March 2022 | A00 | First release. |

## How to Obtain

This guide is not delivered with the product. You can obtain the PDF version by the following method:

- Log in to Inovance's website (*http://en.inovance.cn/*), choose **Support** > **Download**, search by keyword, and then download the PDF file.
- Scan the QR code on the product with your mobile phone.

## Warranty Agreement

The warranty period of the product is 18 months as of the date of manufacture (refer to the barcode on the equipment). If otherwise agreed upon, the agreed terms and conditions shall prevail. After 18 months, a proper maintenance fee is charged.

Within the 18-month warranty period, a reasonable repair fee will be charged for damages caused by the following:

- Operations not following the user instructions
- Fire, flood, or abnormal voltage

- Use of the product for non-recommended functions
- Use of the product outside the scope of intended use
- Force majeure such as natural disasters, earthquake, lightning strike

The maintenance fee is charged according to the latest Price List of Inovance. If otherwise agreed upon, the agreed terms and conditions shall prevail.

For details, see Product Warranty Card.

# Safety Instructions

## ■ Safety Precautions

1. Read and comply with the safety instructions during installation, operation, and maintenance on the equipment.
2. To ensure the safety of humans and the products, follow the marks on the products and all the safety instructions in this document.
3. The “CAUTION,” “WARNING,” and "DANGER” signs are only supplements to the safety instructions.
4. Use this equipment according to the designated environment requirements. Damage caused by improper use is not covered by warranty.
5. Inovance shall take no responsibility for any personal injuries or property damage caused by improper use.

## ■ Safety Levels and Definitions

Danger: Indicates that failure to comply with the notice will result in severe personal injuries or even death.

Warning: Indicates that failure to comply with the notice may result in severe personal injuries or even death.

Caution: Indicates that failure to comply with the notice may result in minor or moderate personal injuries or damage to the equipment. Please keep this guide well so that it can be read when necessary and forward this guide to the end user.

| During Control System Design |
| --- |
| Danger<br>• Provide a safety circuit outside the PLC so that the control system can still work safely once external power failure or PLC fault occurs.<br>• Add a fuse or circuit breaker because the module may smoke or catch fire due to long-time overcurrent caused by operation above rated current or load short-circuit. |

Warning

- An emergency stop circuit, a protection circuit, a forward/reverse operation interlocked circuit, and a upper position limit and lower position limit interlocked circuit must be set in the external circuits of PLC to prevent damage to the machine.
- To ensure safe operation, for the output signals that may cause critical accidents, design external protection circuit and safety mechanism;
- Once PLC CPU detects abnormality in the system , all outputs may be closed; however, when a fault occurs in the controller circuit, the output may not be under control. Therefore, it is necessary to design an appropriate external control circuit to ensure normal operation;
- If the PLC output units such as relays or transistors are damaged, the output may fail to switch between ON and OFF states according to the commands;
- The PLC is designed to be used in indoor electrical environment (overvoltage category II). The power supply must have a system-level lightning protection device, assuring that overvoltage due to lightning shock cannot be applied to the PLC power supply input terminals, signal input terminals and output terminals and so forth, so as to avoid damage to the equipment.

## Installation

Warning

- Installation must be carried out by the specialists who have received the necessary electrical training and understood enough electrical knowledge.
- Disconnect all external power supplies of the system before removing/installing the module. Failure to do so may result in electric shock, module fault or malfunction.
- Do not use the PLC where there are dust, oil smoke, conductive dust, corrosive or combustible gases, or exposed to high temperature, condensation, wind & rain, or subject to vibration and impact. Electric shock, fire and malfunction may also result in damage or deterioration to the product.
- The PLC is open-type equipment that must be installed in a control cabinet with lock (cabinet housing protection > IP20). Only the personnel who have received the necessary electrical training and understood enough electrical knowledge can open the cabinet.

Caution

- Prevent metal filings and wire ends from dropping into ventilation holes of the PLC during installation. Failure to comply may result in fire, fault and malfunction.
- Ensure there are no foreign matters on ventilation surface. Failure to comply may result in poor ventilation, which may cause fire, fault and malfunction.
- Ensure the module is connected to the respective connector securely and hook the module firmly. Improper installation may result in malfunction, fault or fall-off.

## Wiring

Danger

- Wiring must be carried out by personnel who have received the necessary electrical training and understood enough electrical knowledge.
- Disconnect all external power supplies of the system before wiring. Failure to comply may result in electric shock, module fault or malfunction.
- Install the terminal cover attached to the product before power-on or operation after wiring is completed. Failure to comply may result in electric shock.
- Perform good insulation on terminals so that insulation distance between cables will not reduce after cables are connected to terminals. Failure to comply may result in electric shock or damage to the equipment.

Caution

- To avoid electric shock, cut off the power supply before connecting the product to the power supply.
- The input power of the product is 24 VDC. If the power input is not within 24 VDC±20%, the product may be damaged. Therefore, check regularly that the DC power provided by the switching-mode power supply unit is stable.

## During Operation and Maintenance

Caution

- Maintenance & inspection must be carried out by personnel who have the necessary electrical training and experience.
- Do not touch the terminals while the power is on. Failure to comply may result in electric shock or malfunction.
- Disconnect all external power supplies of the system before cleaning the module or re-tightening screws on the terminal block or screws of the connector. Failure to comply may result in electric shock.
- Disconnect all external power supplies of the system before removing the module or connecting/removing the communication wirings. Failure to comply may result in electric shock or malfunction.

**Safety Recommendations**

- On-site manual devices or other backup means must be equipped in the position where the operator directly touches the mechanical parts, such as loading and unloading mechanical tools, or the position where the machine runs automatically. The manual devices and backup means, which can start or interrupt automatic operations of the system, must be independent of the programmable controller.
- If you need to modify the program while the system is running, use the lock function or other protective measures. Ensure that only authorized personnel can make the necessary modifications.

## Disposal

Caution

- Treat the scrapped product as industrial waste. Dispose of the battery according to local laws and regulations.
- Recycle retired equipment by observing industry waste disposal standards to avoid environmental pollution.

# 1 产品信息

## 1.1 Model Number and Nameplate

GL 20 - 4 DA

① ② ③ ④

| | |
|---|---|
| ① **Product Information**<br>GL: General local module | ③ **I/O Points**<br>4: 4 channels<br>8: 8 channels |
| ② **Serial Number**<br>20: 20 series module | ④ **Module Type**<br>DA: Analog output<br>AD: Analog input<br>AM: Hybrid module<br>PT: Heating resistor temperature measurement<br>TC: Thermocouple temperature detection |

Based on the above description of model number and nameplate, the relevant ordering data of this product is described in the following table.

| Model | Description | Product Code | Applicable Model |
|---|---|---|---|
| GL20-4DA | GL20 series 4-channel analog output module supports voltage/current output. | 01440287 | AC800 series, Easy series |

## 1.2 Components

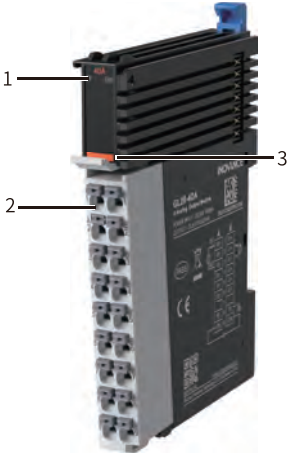


| No. | Interface Name | Description | | | |
|---|---|---|---|---|---|
| 1 | Signal indicators | PR (POWER +RUN) | Power / running indicator | Yellow green | ON when the module is in normal operation |
| | | ERR | State machine error indicator | Red | ON when an error occurs in the state machine |
| 2 | Terminals | See Terminal Definition for detailed definition | | | |
| 3 | Color identification | | Red: Digital output | | Orange: Analog output |
| | | | Gray: Digital input | | Green: Analog input |
| | | | White: Communication | | Blue: Other module |

## 1.3 Specifications

### ■ Power supply specifications

| Item | Specification |
|---|---|
| Rated bus input voltage | 5 VDC (4.75 VDC to 5.25 VDC) |
| Rated bus input current | 120 mA (typical@5 V) |
| Rated terminal input voltage | 5 VDC (20.4 VDC to 28.8 VDC) |
| Rated terminal input current | 100 mA (typical@24 V) |
| Rated terminal output voltage | N/A |
| Rated terminal output current | N/A |
| Hot swap | Not supported |

### ■ Output specifications

| Item | Specification |
|---|---|
| Output type | Analog output |
| Output mode | Voltage/Current |
| Output channels | 4 |
| Resolution | 16-bit |
| Conversion time | 60 us/ channel |
| Output voltage range | ±10 V, 0 to 10 V, ±5 V, 0 to 5 V, 1 to 5V |
| Voltage output load | 1kΩ |
| Voltage output accuracy (25°C) | ±0.1% (full range) |
| Voltage output accuracy (full temperature range) | ±0.5% (full range) |
| Voltage output diagnosis | Supports short circuit detection, overtemperature protection |
| Output current range | 0 to 20 mA, 4 to 20 mA |
| Current output load | 0-600Ω |
| Current output accuracy (25°C) | ±0.1% (full range) |

| Item | Specification |
| --- | --- |
| Current output accuracy (full temperature range) | ±0.5% (full range) |
| Current output diagnosis | Supports open circuit detection, overtemperature protection |
| Isolation | No isolation between the channels;<br>Isolation between the channels and the power supply;<br>Isolation between the channels and the bus |
| Output action display | N/A |
| Output derating | N/A |

## ■ Software specifications

| Item | Specification |
| --- | --- |
| Independent channel enable configuration | Supported |
| Diagnostic report configuration | Supported |
| Diagnostic detection configuration | Short circuit detection and wire break detection, not supported by output range containing 0 |
| Conversion mode configuration | ±10 V, 0 to 10 V, ±5 V, 0 to 5 V, 1 to 5 V, 0 to 20 mA, 4 to 20 mA |
| Output after stop configuration | Output zero, output last value, output preset value |
| Preset value configuration | Supported |
| Digital output range configuration | The default is consistent with that of GL10 (–20000 to 20000) and supports ±32000 |
| Sampling time | 250 us for four channels |
| Sampling refresh | Refresh asynchronously according to the sampling time, not required to refresh synchronously according to the bus cycle |
| When in stop mode | Output according to output mode upon stop and present value, no refresh |

# 2 Mechanical Installation

## 2.1 Mounting Dimensions

### ■ Module

The mounting dimensions (in mm) are shown in the figure below.

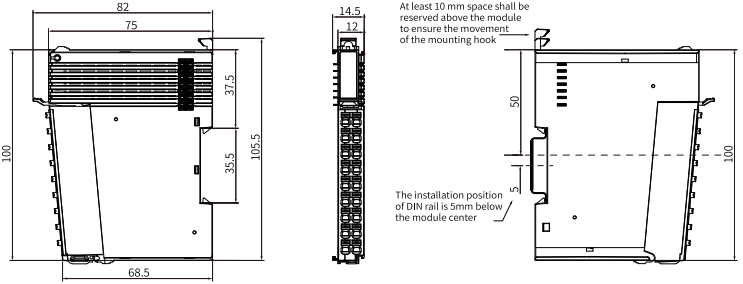


### ■ Cable Connection

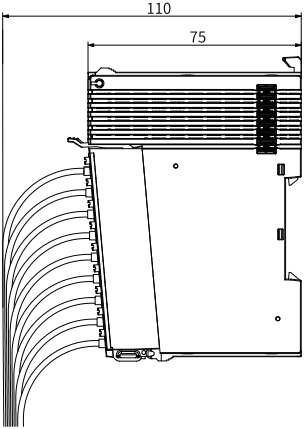

## 2.2 Installation Method

### ■ Installing Modules Side-by-Side

You can install multiple modules side by side with the help of top and bottom guides on the modules, as shown below.

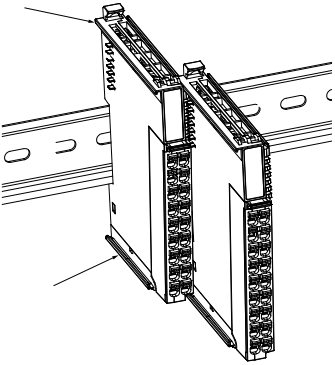

### ■ Installing Module onto DIN Rail

You can install the module onto a DIN rail. Align the module with the DIN rail and push the module in the direction indicated by the arrow until you hear a click, as shown below.

**Note:** After the module is installed, the DIN rail mounting hook will automatically move downward to lock the module to the rail. If the hook does not move downward, press down the top of the hook to ensure that the module is installed in place.

Mount an end plate on either side of the module assembly. To mount the end plate, hook the bottom of it to the bottom of the DIN rail, rotate the end plate to hook the top of it to the top of the DIN rail, and then tighten the screw to lock the end plate in place, as shown below.

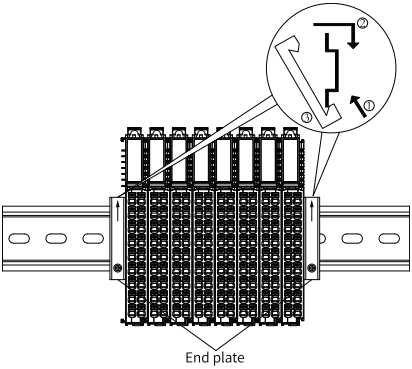


## ■ Removing Module

Pry the DIN rail mounting hook upwards with a tool such as slotted screwdriver, hold the protrusions and pull the module out straight forward, and then press down the top of the DIN rail mounting hook.

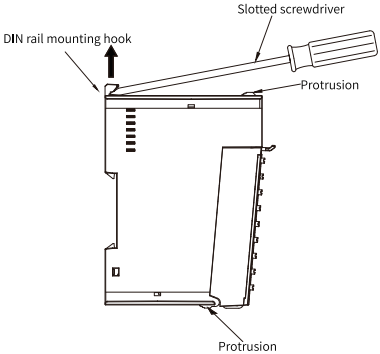


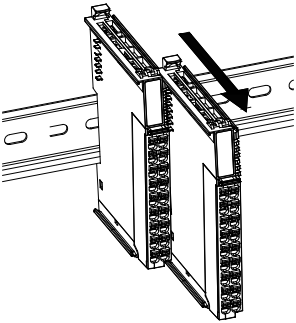

# 3 Electrical Installation

## 3.1 Cable Selection

The cable lug and cable diameter included in the following table are only for reference.

| Material Name | Applicable Cable Diameter | | KST | | Suzhou Yuanli | |
|---|---|---|---|---|---|---|
| | $mm^2$ | AWG | Model | Crimping Tool | Model | Crimping Tool |
| Tubular lug | 0.3 | 22 | E0308 | KST2000L | 0308 | YAC-5 |
| | 0.5 | 20 | E0508 | | 0508 | |
| | 0.75 | 18 | E7508 | | 7508 | |
| | 1.0 | 18 | E1008 | | 1008 | |
| | 1.5 | 16 | E1508 | | 1508 | |

If you use other types of tubular lug, crimp the lug to the cables according to the shape and dimension requirements shown in the figure below.

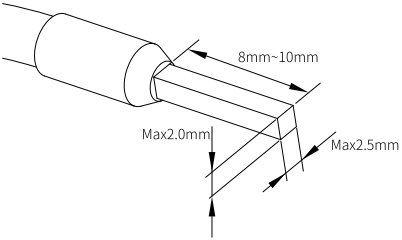

## 3.2 Terminal Definition

| Signal | Left Terminal | Right Terminal | Signal |
|---|---|---|---|
| V0+ | A1 | B1 | V1+ |
| I0+ | A2 | B2 | I1+ |
| VI0- | A3 | B3 | VI1- |
| V2+ | A4 | B4 | V3+ |
| I2+ | A5 | B5 | I3+ |
| VI2- | A6 | B6 | VI3- |
| - | A7 | B7 | - |
| PE | A8 | B8 | PE |
| 24 V | A9 | B9 | COM |

## 3.3 Terminal Wiring

### ■ Wiring Precautions

- Do not bundle the extension cable together with power cables (high voltage, large current) which produce strong interference signals; otherwise, it may be influenced by noise, surge and induction. Separate it from other cables and avoid cabling in parallel.
- Select recommended cables and pinboards for connection. It is recommended that shielded cables be used as extension cables to enhance capacity of resisting interference.
- Apply single-point grounding for the shielding of shielded cable and solder sealed cable.

### ■ External Wiring

**Connection for voltage-controlled signal**

(a) Voltage output

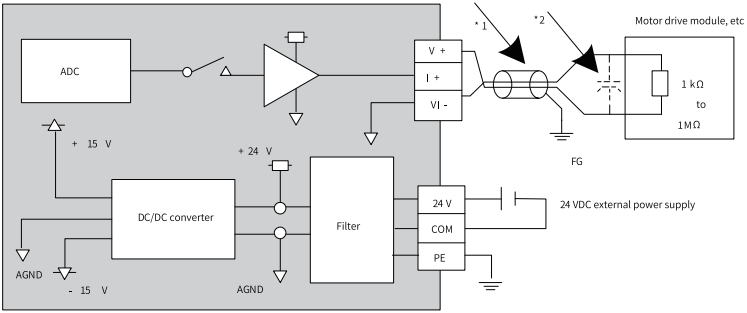


- *1 Use 2-core shielded twisted pair cable as power cable.
- *2 If noises or ripples are generated in external wiring, connect a capacitor of 0.1 to 0.47mF25V between terminals V+/I+ and VI-.

**Connection for current-controlled signal**

(b) Current output

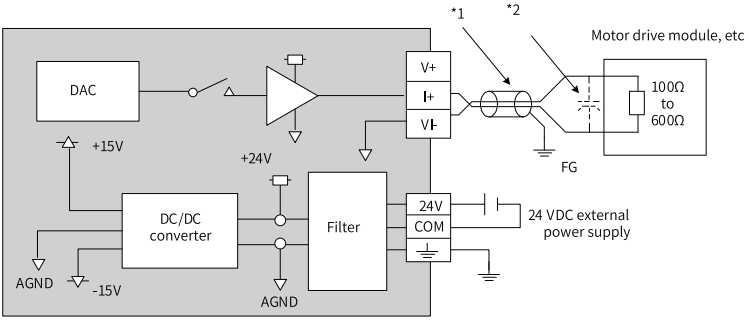


- *1 Use 2-core shielded twisted pair cable as power cable.
- *2 If noises or ripples are generated in external wiring, connect a capacitor of 0.1 to 0.47mF25V between terminals V+/I+ and VI-.

# 4 Programming Examples

The following is an example where the input voltage of channel 0 of the GL20-4DA module is assigned to the corresponding variable, and AC802 is used as the master control module.

1. Add GL20-4DA module.

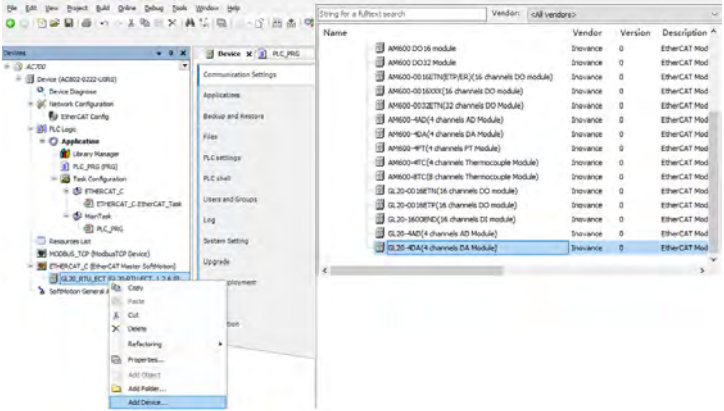


2. In the **Channels Config** interface, check **Enable access** for Access-0, and set the parameters as per needs.

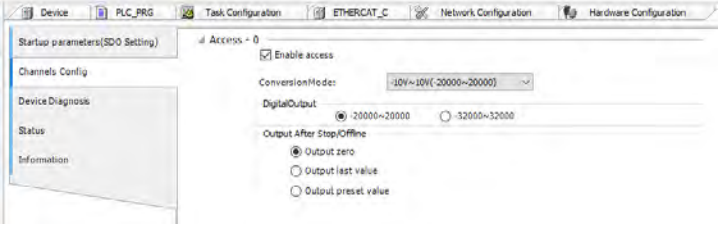


3. Define variables DA_CH0, DA_CH1, DA_CH2 and DA_CH3 with the ST programming language as shown in the figure below.

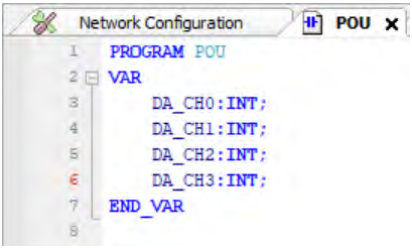


4. Map the defined variable DA_CH0 to channel 0 of the configured GL20-4DA module.

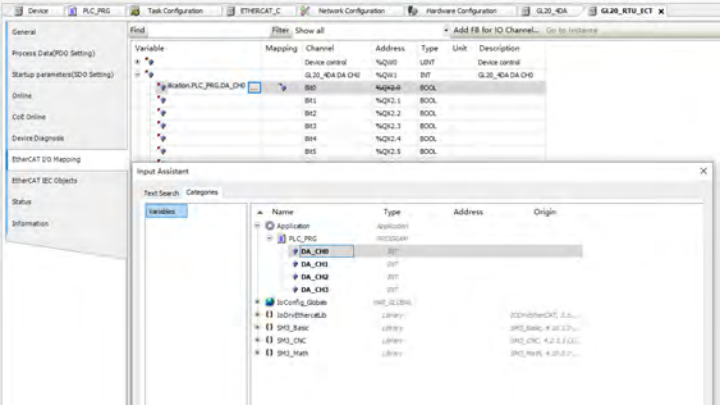


5. After successful compiling, download the project and run it.