INOVANCE

FORWARD, ALWAYS PROGRESSING

PS00006874A00

GL20-PS2
Auxiliary Power Module
User Guide

Shenzhen Inovance Technology Co., Ltd.

Add.: Inovance Headquarters Tower, High-tech Industrial Park,
Guanlan Street, Longhua New District, Shenzhen
Tel:(0755) 2979 9595 Fax: (0755) 2961 9897
www.inovance.com

Preface

■ About this Guide

GL20-PS2 power supply module outputs 2 A current to power at most 16 modules and can be used with Easy series products and GL20 series communication interface module such as GL20-RTU-ECT.

This guide describes the mechanical installation, electrical installation and programming examples of the product.

■ Standard Compliance

The following table lists the certifications, directives, and standards that the product may comply with. For details about the acquired certificates, see the certification marks on the product nameplate.

Certification	Directive		Standard
CE certification	EMC directive	2014/30/EU	**24 VDC products** EN 61131-2 **24 VAC products** EN 61131-2 EN 61000-3-2 EN 61000-3-3
	LVD directive	2014/35/EU	EN 61010-1 EN 61010-2-201
	RoHS directive	2011/65/EU amended by (EU) 2015/863	EN IEC 63000
UL/cUL certification	-		UL 61010-1 UL 61010-2-201 UL 61010-2-030 CAN/CSA-C22.2 No. 61010-1 CSA C22.2 NO. 61010-2-201 CSA C22.2 NO. 61010-2-030

Certification	Directive	Standard
KCC certification	-	-
EAC certification	-	-

More Data

Document Name	Data Code	Description
GL20-RTU-ECT Communication Interface Module User Guide	PS00004985	This guide describes the installation, wiring and more of the product.

Revision History

Date	Version	Description
February 2023	A00	First release.

How to Obtain

This guide is not delivered with the product. You can obtain the PDF version by the following method:

Log in to Inovance's website (*http://en.inovance.cn/*), choose **Support** > **Download**, search by keyword, and then download the PDF file.

Safety Instructions

■ Safety Precautions

1. Before installing, using, and maintaining this equipment, read the safety information and precautions thoroughly, and comply with them during operations.
2. To ensure the safety of humans and equipment, follow the signs on the equipment and all the safety instructions in this user guide.
3. "CAUTION", "WARNING", and "DANGER" items in the user guide only indicate some of the precautions that need to be followed; they just supplement the safety precautions.
4. Use this equipment according to the designated environment requirements. Damage caused by improper use is not covered by warranty.
5. Inovance shall take no responsibility for any personal injuries or property damage caused by improper use.

■ Safety Levels and Definitions

Danger: Indicates that failure to comply with the notice will result in death or severe personal injuries.

Warning: Indicates that failure to comply with the notice may result in death or severe personal injuries.

Caution: Indicates that failure to comply with the notice may result in minor or moderate personal injuries or damage to the equipment. Please keep this guide well so that it can be read when necessary and forward this guide to the end user.

During Control System Design
Danger • Provide a safety circuit outside the PLC so that the control system can still work safely once external power failure or PLC fault occurs. • Add a fuse or circuit breaker because the module may smoke or catch fire due to long-time overcurrent caused by operation above rated current or load short-circuit.

Warning

- An emergency stop circuit, a protection circuit, a forward/reverse operation interlocked circuit, and a upper position limit and lower position limit interlocked circuit must be set in the external circuits of PLC to prevent damage to the machine.
- To ensure safe operation, for the output signals that may cause critical accidents, design external protection circuit and safety mechanism.
- Once PLC CPU detects abnormality in the system , all outputs may be closed; however, when a fault occurs in the controller circuit, the output may not be under control. Therefore, it is necessary to design an appropriate external control circuit to ensure normal operation.
- If the PLC output units such as relays or transistors are damaged, the output may fail to switch between ON and OFF states according to the commands.
- The PLC is designed to be used in indoor electrical environment (overvoltage category II). The power supply must have a system-level lightning protection device, assuring that overvoltage due to lightning shock cannot be applied to the PLC power supply input terminals, signal input terminals and output terminals and so forth, so as to avoid damage to the equipment.

Installation

Warning

- Installation must be carried out by the specialists who have received the necessary electrical training and understood enough electrical knowledge.
- Disconnect all external power supplies of the system before removing/installing the module. Failure to do so may result in electric shock, module fault or malfunction.
- Do not use the PLC where there are dust, oil smoke, conductive dust, corrosive or combustible gases, or exposed to high temperature, condensation, wind & rain, or subject to vibration and impact. Electric shock, fire and malfunction may also result in damage or deterioration to the product.
- The PLC is open-type equipment that must be installed in a control cabinet with lock (cabinet housing protection > IP20). Only the personnel who have received the necessary electrical training and understood enough electrical knowledge can open the cabinet.

Caution

- Prevent metal filings and wire ends from dropping into ventilation holes of the PLC during installation. Failure to comply may result in fire, fault and malfunction.
- Ensure there are no foreign matters on ventilation surface. Failure to comply may result in poor ventilation, which may cause fire, fault and malfunction.
- Ensure the module is connected to the respective connector securely and hook the module firmly. Improper installation may result in malfunction, fault or fall-off.

Wiring

Danger

- Wiring must be carried out by personnel who have received the necessary electrical training and understood enough electrical knowledge.
- Disconnect all external power supplies of the system before wiring. Failure to comply may result in electric shock, module fault or malfunction.
- Perform good insulation on terminals so that insulation distance between cables will not reduce after cables are connected to terminals. Failure to comply may result in electric shock or damage to the equipment.

Caution

- To avoid electric shock, cut off the power supply before connecting the product to the power supply.
- The input power of the product must meet the specifications listed in this guide. If the power input does not meet the specifications, the equipment may be damaged. Thus, check regularly that the DC power provided by the switching-mode power supply unit is stable.

During Operation and Maintenance

Caution

- Maintenance & inspection must be carried out by personnel who have the necessary electrical training and experience.
- Do not touch the terminals while the power is on. Failure to comply may result in electric shock or malfunction.
- Disconnect all external power supplies of the system before cleaning the module. Failure to comply may result in electric shock.
- Disconnect all external power supplies of the system before removing the module or connecting/removing the communication wirings. Failure to comply may result in electric shock or malfunction.

Safety Recommendations

- On-site manual devices or other backup means must be equipped in the position where the operator directly touches the mechanical parts, such as loading and unloading mechanical tools, or the position where the machine runs automatically. The manual devices and backup means, which can start or interrupt automatic operations of the system, must be independent of the programmable controller.
- If you need to modify the program while the system is running, use the lock function or other protective measures. Ensure that only authorized personnel can make the necessary modifications.

Disposal

Caution

- Treat the scrapped product as industrial waste. Dispose of the battery according to local laws and regulations.
- Recycle retired equipment by observing industry waste disposal standards to avoid environmental pollution.

1 Product Information

1.1 Model Number and Nameplate

GL 20 -PS 2

① ② ③ ④

① **Product Information** GL: General local module	③ **Module Type** PS: Power supply module
② **Serial Number** 20: 20 series module	④ **Output current** 2: 2 A

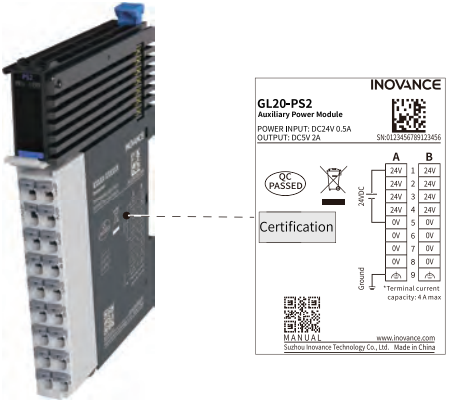

Based on the above description of model number and nameplate, the relevant ordering data of this product is described in the following table.

Model	Description	Product Code	Applicable Model
GL20-PS2	GL20 series programmable logic controller power supply module	01440351	Easy series products and GL20 series communication interface modules such as GL20-RTU-ECT

1.2 Components

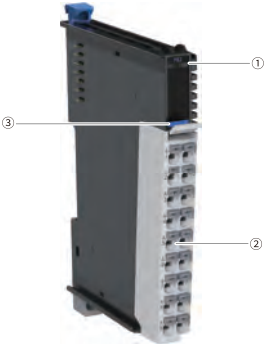

No.	Name	Description			
①	Signal indicators	RUN	Running state indicator	Green	• ON: The module is in normal operation. • Flashing slowly (at an interval of 1s): The module is being addressed. • Flashing quickly (at an interval of 200ms): The module is preparing or stopped. • OFF: The module is not powered on or is faulty.
		ERR	Error indicator	Red	ON when the module is faulty or software error occurs.
②	Terminals	24 V input. For detailed terminal definition, see *"3.2 Terminal Definition" on page 17*			
③	Color identification		Red: Digital output		Orange: Analog output
			Gray: Digital input		Green: Analog input
			White: Communication		Blue: Other module

1.3 Specifications

■ Power supply specifications

Item	Specification
Rated bus output voltage	5 VDC (4.5 VDC to 5.5 VDC)
Rated bus output current	2 A (typical@5 V)
Reverse connection protection for power input of terminals	Supported
Rated terminal input voltage	24 VDC (20.4 VDC to 28.8 VDC)
Rated terminal input current	0.5 A (typical@24 V)
Terminal current capacity	4 A max.
Bus output power ripple	3%
Bus output derating	85% derating at 55°C (the output current does not exceed 1.7 A), or 10°C derating when output curent is 2 A
Bus output short-circuit protection	3 A, hiccup mode protection
Power conversion efficiency	70%, more than 85%@2 A
Power isolation	Not supported
Retentive at power failure	Not supported

■ Software specifications

Item	Specification
Module type and basic information reading	Supported
Module addressing	Supported
Read and write of module configuration	Supported
Module state machine control	Supported, the host or gateway can switch the status of the module by command, including initialization status, configuration status, operation status, and stop status

Item	Specification
Module status acquisition	Supported, the host or gateway can obtain the status information of the module for the management of the master to control timing
Periodic data access	Supported, after entering the running state, the host or gateway can access the module data by a period agreed with the module
Index data access	Not supported
Register data access	Supported
Memory block data access	Not supported
Read exception code	Supported
Stop module operation	Supported
Diagnostic report	Not supported
Firmware update	Not supported

1.4 Environmental Specifications

Item	Specification
Ambient operating temperature	–20°C to 55°C
Ambient operating humidity	10%–90% RH (condensation)
Working environment	No corrosive and flammable gas and no excessive conductive dust
Storage temperature	–40°C to 70°C (<90% RH, non-condensing)
Altitude	⩽2000 m
Pollution degree	2
Noise immunity	2 kV on power supply line (Conforms to IEC 61000-4-4)
Overvoltage category	I
EMC immunity level	Zone B, IEC61131-2

Item	Specification
Vibration resistance	IEC 60068-2-6 5 Hz to 8.4 Hz, 3.5 mm_p, 8.4 Hz to 150 Hz, 1g, 10 times each in X, Y and Z directions
Shock resistance	IEC 60068-2-27 150 m/s^2, 11 ms, 3 times each in ±X, ±Y and ±Z directions, 18 times in total

2 Mechanical Installation

2.1 Mounting Dimensions

■ Module

The mounting dimensions (in mm) are shown in the figure below.

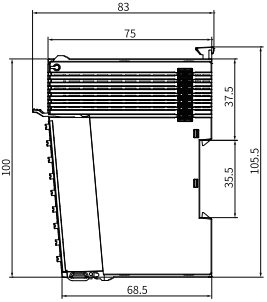

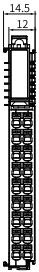

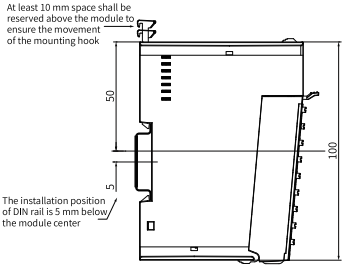

■ Cable Connection

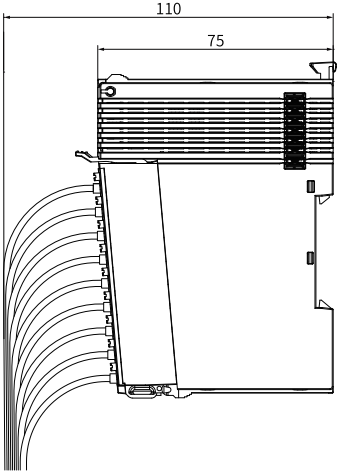

2.2 Installation Method

The module is mounted onto a DIN rail in conformity with IEC 60715 (width: 35 mm, thickness: 1 mm). The dimensions (unit: mm) are shown below.

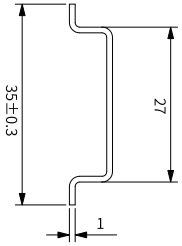

■ Installing Modules Side-by-Side

You can install multiple modules side by side with the help of top and bottom guides on the modules, as shown below.

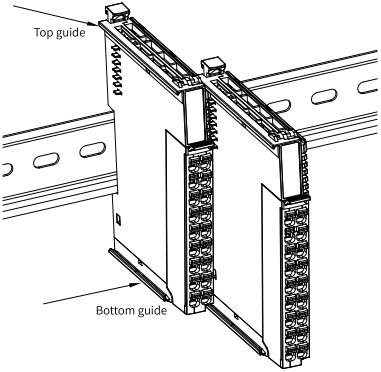

■ Installing Module onto DIN Rail

You can install the module onto a DIN rail. Align the module with the DIN rail and push the module in the direction indicated by the arrow until you hear a click, as shown below.

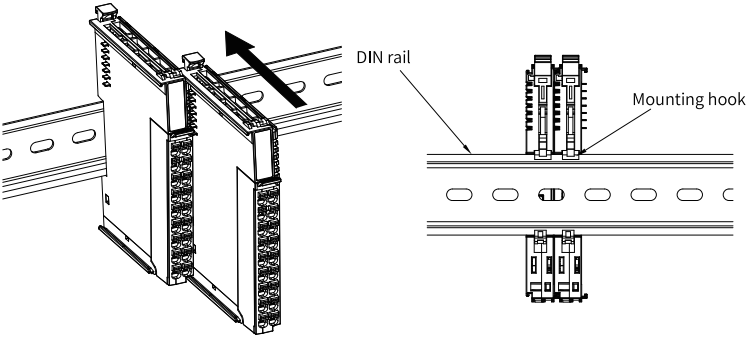

Note: After the module is installed, the DIN rail mounting hook will automatically move downward to lock the module to the rail. If the hook does not move downward, press down the top of the hook to ensure that the module is installed in place.

Mount an end plate on either side of the module assembly. To mount the end plate, hook the bottom of it to the bottom of the DIN rail, rotate the end plate to hook the top of it to the top of the DIN rail, and then tighten the screw to lock the end plate in place, as shown below.

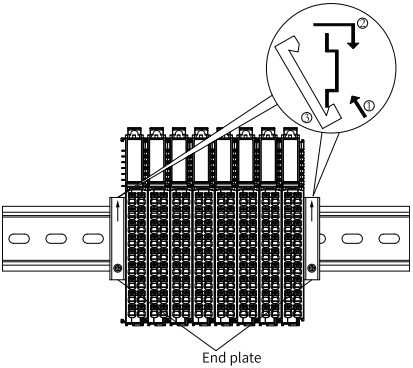

■ Removing Module

Pry the DIN rail mounting hook upwards with a tool such as slotted screwdriver, hold the protrusions and pull the module out straight forward, and then press down the top of the DIN rail mounting hook.

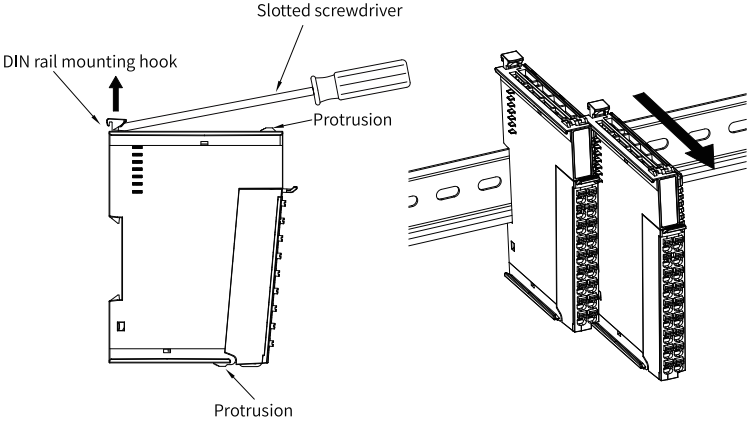

3 Electrical Installation

3.1 Cable Selection

The cable lug and cable diameter included in the following table are only for reference.

Material Name	Applicable Cable Diameter		KST		Suzhou Yuanli	
	mm^2	AWG	Model	Crimping Tool	Model	Crimping Tool
Tubular lug	0.3	22	E0308	KST2000L	0308	YAC-5
	0.5	20	E0508		0508	
	0.75	18	E7508		7508	
	1.0	18	E1008		1008	
	1.5	16	E1508		1508	

If you use other types of tubular lug, crimp the lug to the cables according to the shape and dimension requirements shown in the figure below.

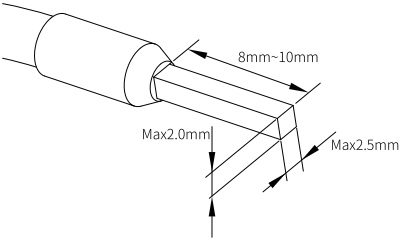

3.2 Terminal Definition

Left Signal	Left Terminal	Right Terminal	Right Signal
24 V	A1	B1	24 V
24 V	A2	B2	24 V
24 V	A3	B3	24 V
24 V	A4	B4	24 V
0 V	A5	B5	0 V
0 V	A6	B6	0 V
0 V	A7	B7	0 V
0 V	A8	B8	0 V
PE	A9	B9	PE

3.3 Terminal Wiring

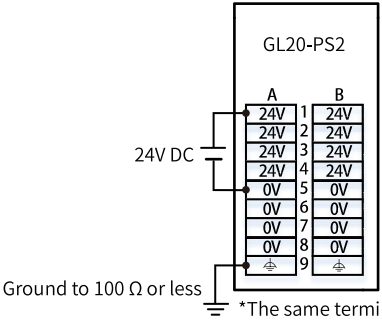

*The same terminals are connected.
Terminal current capacity: 4 A max.

4 Programming Examples

The following is an example where AM600 is used as the master control module along with the GL2-PS2 module.

1. Add the GL20-PS2 module.

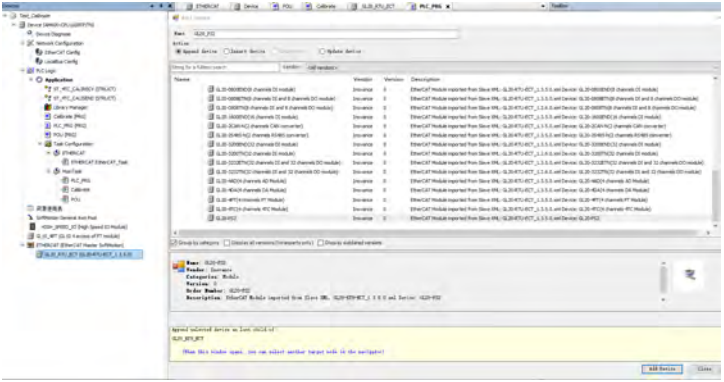

2. After successful compiling, download the project and run it.

Note

GL20-PS2 just serves to supply power to the additional modules and therefore does not need SDO and PDO configuration.