INOVANCE

FORWARD, ALWAYS PROGRESSING

PS00004985 A01

GL20-RTU-ECT Communication Interface Module

User Guide

Shenzhen Inovance Technology Co., Ltd.

Add.: Inovance Headquarters Tower, High-tech Industrial Park,
Guanlan Street, Longhua New District, Shenzhen
Tel:(0755) 2979 9595 Fax: (0755) 2961 9897
www.inovance.com

Preface

About This Guide

GL20-RTU-ECT series EtherCAT communication interface module This product features support for EtherCAT communication and auto scanning function and is applicable to Inovance and third-party EtherCAT master such as PLC and boards. One EtherCAT communication interface module can connect up to 16 GL20 I/O modules. When the number of connected I/O modules exceeds 16, an expansion power supply module is required (one power supply module for every additional 16 I/O modules).

This guide describes the mechanical installation, electrical installation and programming examples of the product.

Revision History

Date	Version	Description
June 2022	A01	Minor corrections
April 2022	A00	First release.

How to Obtain

This guide is not delivered with the product. You can obtain the PDF version by the following method:

- Log in to Inovance's website (*http://en.inovance.cn/*), choose **Support** > **Download**, search by keyword, and then download the PDF file.
- Scan the QR code on the product with your mobile phone.

Warranty Agreement

The warranty period of the product is 18 months as of the date of manufacture (refer to the barcode on the equipment). If otherwise agreed upon, the agreed terms and conditions shall prevail. After 18 months, a proper maintenance fee is charged.

Within the 18-month warranty period, a reasonable repair fee will be charged for damages caused by the following:

- Operations not following the user instructions
- Fire, flood, or abnormal voltage
- Use of the product for non-recommended functions
- Use of the product outside the scope of intended use

- Force majeure such as natural disasters, earthquake, lightning strike

The maintenance fee is charged according to the latest Price List of Inovance. If otherwise agreed upon, the agreed terms and conditions shall prevail.

For details, see Product Warranty Card.

Safety Instructions

■ Safety Precautions

1. Read and comply with the safety instructions during installation, operation, and maintenance on the equipment.
2. To ensure the safety of humans and the products, follow the marks on the products and all the safety instructions in this document.
3. The “CAUTION,” “WARNING,” and "DANGER” signs are only supplements to the safety instructions.
4. Use this equipment according to the designated environment requirements. Damage caused by improper use is not covered by warranty.
5. Inovance shall take no responsibility for any personal injuries or property damage caused by improper use.

■ Safety Levels and Definitions

DANGER: Indicates that failure to comply with the notice will result in severe personal injuries or even death.

WARNING: Indicates that failure to comply with the notice may result in severe personal injuries or even death.

CAUTION: Indicates that failure to comply with the notice may result in minor or moderate personal injuries or damage to the equipment. Please keep this guide well so that it can be read when necessary and forward this guide to the end user.

During Control System Design
DANGER • Provide a safety circuit outside the PLC so that the control system can still work safely once external power failure or PLC fault occurs. • Add a fuse or circuit breaker because the module may smoke or catch fire due to long-time overcurrent caused by operation above rated current or load short-circuit.

WARNING

- An emergency stop circuit, a protection circuit, a forward/reverse operation interlocked circuit, and a upper position limit and lower position limit interlocked circuit must be set in the external circuits of PLC to prevent damage to the machine.
- To ensure safe operation, for the output signals that may cause critical accidents, design external protection circuit and safety mechanism;
- Once PLC CPU detects abnormality in the system , all outputs may be closed; however, when a fault occurs in the controller circuit, the output may not be under control. Therefore, it is necessary to design an appropriate external control circuit to ensure normal operation;
- If the PLC output units such as relays or transistors are damaged, the output may fail to switch between ON and OFF states according to the commands;
- The PLC is designed to be used in indoor electrical environment (overvoltage category II). The power supply must have a system-level lightning protection device, assuring that overvoltage due to lightning shock cannot be applied to the PLC power supply input terminals, signal input terminals and output terminals and so forth, so as to avoid damage to the equipment.

Installation

WARNING

- Installation must be carried out by the specialists who have received the necessary electrical training and understood enough electrical knowledge.
- Disconnect all external power supplies of the system before removing/installing the module. Failure to do so may result in electric shock, module fault or malfunction.
- Do not use the PLC where there are dust, oil smoke, conductive dust, corrosive or combustible gases, or exposed to high temperature, condensation, wind & rain, or subject to vibration and impact. Electric shock, fire and malfunction may also result in damage or deterioration to the product.
- The PLC is open-type equipment that must be installed in a control cabinet with lock (cabinet housing protection > IP20). Only the personnel who have received the necessary electrical training and understood enough electrical knowledge can open the cabinet.

CAUTION

- Prevent metal filings and wire ends from dropping into ventilation holes of the PLC during installation. Failure to comply may result in fire, fault and malfunction.
- Ensure there are no foreign matters on ventilation surface. Failure to comply may result in poor ventilation, which may cause fire, fault and malfunction.
- Ensure the module is connected to the respective connector securely and hook the module firmly. Improper installation may result in malfunction, fault or fall-off.

Wiring

DANGER

- Wiring must be carried out by personnel who have received the necessary electrical training and understood enough electrical knowledge.
- Disconnect all external power supplies of the system before wiring. Failure to comply may result in electric shock, module fault or malfunction.
- Install the terminal cover attached to the product before power-on or operation after wiring is completed. Failure to comply may result in electric shock.
- Perform good insulation on terminals so that insulation distance between cables will not reduce after cables are connected to terminals. Failure to comply may result in electric shock or damage to the equipment.

CAUTION

- To avoid electric shock, cut off the power supply before connecting the product to the power supply.
- The input power of the product is 24 VDC. If the power input is not within 24 VDC±20%, the product may be damaged. Therefore, check regularly that the DC power provided by the switching-mode power supply unit is stable.

During Operation and Maintenance

CAUTION

- Maintenance & inspection must be carried out by personnel who have the necessary electrical training and experience.
- Do not touch the terminals while the power is on. Failure to comply may result in electric shock or malfunction.
- Disconnect all external power supplies of the system before cleaning the module or re-tightening screws on the terminal block or screws of the connector. Failure to comply may result in electric shock.
- Disconnect all external power supplies of the system before removing the module or connecting/removing the communication wirings. Failure to comply may result in electric shock or malfunction.

Safety Recommendations

- On-site manual devices or other backup means must be equipped in the position where the operator directly touches the mechanical parts, such as loading and unloading mechanical tools, or the position where the machine runs automatically. The manual devices and backup means, which can start or interrupt automatic operations of the system, must be independent of the programmable controller.
- If you need to modify the program while the system is running, use the lock function or other protective measures. Ensure that only authorized personnel can make the necessary modifications.

Disposal

CAUTION

- Treat the scrapped product as industrial waste. Dispose of the battery according to local laws and regulations.
- Recycle retired equipment by observing industry waste disposal standards to avoid environmental pollution.

1 Product Information

1.1 Model Number and Nameplate

GL 20 - RTU - ECT

① ② ③ ④

① **Product Information** GL: General local module	③ **I/O Type** RTU: Remote terminal unit
② **Serial Number** 20: 20 series module	④ **Module Type** ECT: EtherCAT PN: ProfiNET

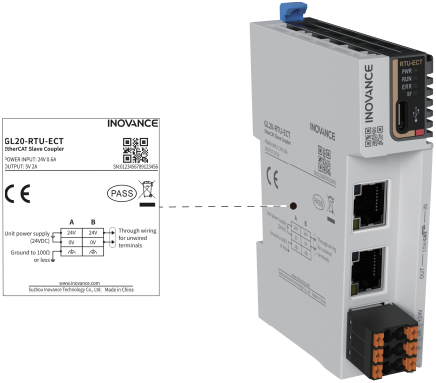

Based on the above description of model number and nameplate, the relevant ordering data of this product is described in the following table.

Model	Description	Product Code	Applicable Model
GL20-RTU-ECT	GL20-RTU-ECT EtherCAT communication interface module	01440286	Inovance and third-party EtherCAT master such as PLC and boards.

1.2 Components

The following describes the terminals and interfaces of the module.

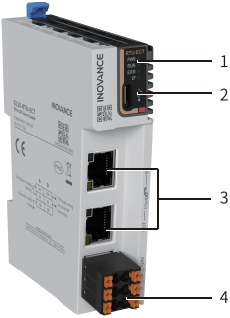

No.	Interface Name	Description			
1	Signal indicators	PWR	Power indicator	Green	ON when power supply is switched on
		RUN	Running state indicator	OFF	ECT module is in INIT state
				Blinking (green)	ECT module is in state Pre-Operational
				Single flash (green)	ECT module is in state Safe-Operational
				ON (green)	ECT module is in state Operational
		ERR	Communica-tion error indicator	OFF	EtherCAT communication is normal
				Blinking (red)	EtherCAT communication receives non-executable state transition commands
				Single flash (red)	Network disconnection, ECAT module synchronization error
				Double flash (red)	EtherCAT watchdog error
		SF	Fault indicator	OFF	The device is normal
				Single flash	An error occurred in the expansion module
				Blinking	Invalid configuration
2	Type-C interface	Used for software upgrade of the board			
3	EtherCAT interface	IN: EtherCAT input			
		OUT: EtherCAT output for connecting back-end EtherCAT slaves			
4	24 V power supply	For power supply input			

1.3 Specifications

■ Power supply specifications

Item	Specification
Rated terminal input voltage	24 VDC (20.4 VDC to 28.8 VDC)
Rated terminal input current	0.6 A (typical@24 V)
Rated bus output voltage	5 VDC (4.75 VDC to 5.25 VDC)
Rated bus output current	2 A (typical@5 V)
Power output derating	85% derating at 55°C (the output current does not exceed 1.7A), or 10°C derating at 2 A output
Isolation	No
Power protection	Overcurrent protection, anti reverse connection protection, surge absorption

■ Software specifications

Item	Specification
Access through alias	The ECT module supports alias configuration and access through its alias. Expansion modules connected to the ECT module do not support alias configuration and access through alias. Range: 1 to 65535
PDO data size: input	1,024 bytes max.
PDO data size: output	1,024 bytes max.
Mailbox data size: input	256 bytes max.
Mailbox data size: output	256 bytes max.

1.4 Environmental Specifications

Item	Specification
Ambient operating temperature	–20°C to 55°C
Ambient operating humidity	<95% RH, non-condensing
Atmosphere	Must be free from corrosive gases
Ambient storage temperature	–20°C to 60°C (<90% RH, non-condensing)
Altitude	2,000 m max. (80 kPa)
Pollution degree	2 or less
Noise immunity	2 kV on power supply line (Conforms to IEC 61000-4-4)
Overvoltage category	II
EMC immunity level	Zone B, IEC61131-2
Vibration resistance	IEC 60068-2-6 5 to 8.4 Hz with 3.5 mm amplitude, 8.4 to 150 Hz, acceleration of 9.8 m/s^2, X, Y, and Z directions (10 sweeps of 10 min each = 100 min in total)
Shock resistance	IEC 60068-2-27, 9.8m/s^2, 11ms, X, Y, Z, 6 directions, 3 times/direction

2 Mechanical Installation

2.1 Mounting Dimensions

■ Module

The mounting dimensions (in mm) are shown in the figure below.

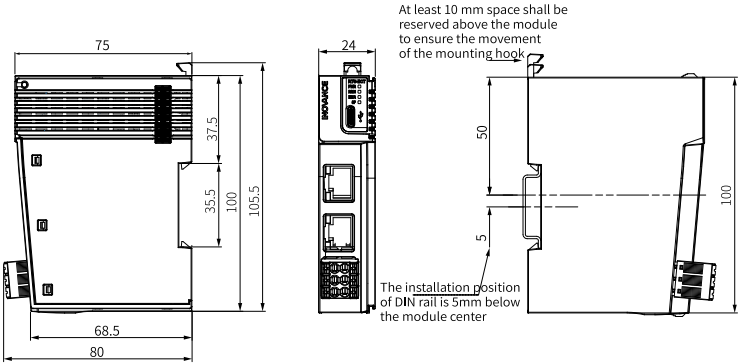

■ Cable Connection

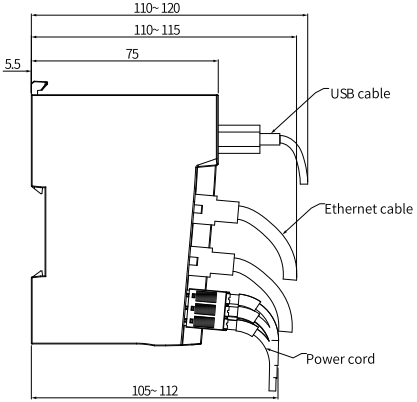

■ End Cover

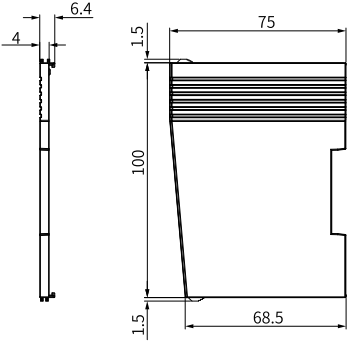

2.2 Installation Method

■ Installing Modules Side-by-Side

Before installing the module, remove the end cover in the direction indicated by the arrow, as shown below.

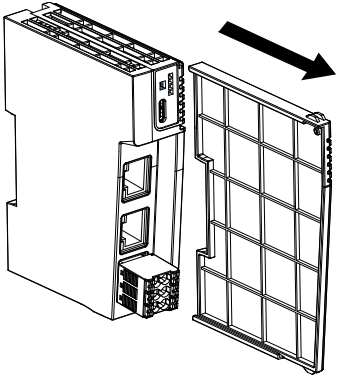

You can install multiple modules side by side with the help of top and bottom guides on the modules, as shown below.

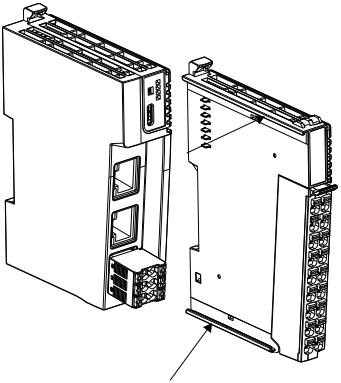

■ Installing Module onto DIN Rail

You can install the module onto a DIN rail. Align the module with the DIN rail and push the module in the direction indicated by the arrow until you hear a click, as shown below.

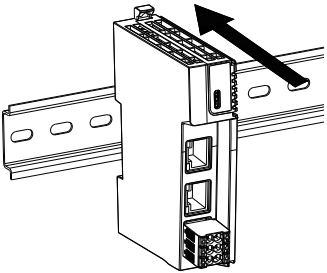

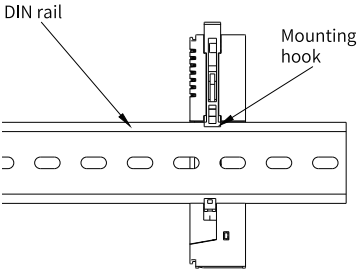

Note: After the module is installed, the DIN rail mounting hook will automatically move downward to lock the module to the rail. If the DIN rail mounting hook does not move downward, press down the top of it to ensure that the module is installed in place.

Install the end cover to the last module to prevent exposure of the metal pins. After installing the end cover, mount an end plate on either side of the module assembly to prevent sliding of the module.

■ Removing Module

Pry the DIN rail mounting hook upwards with a tool such as slotted screwdriver, and then pull the module away from the DIN rail to remove it.

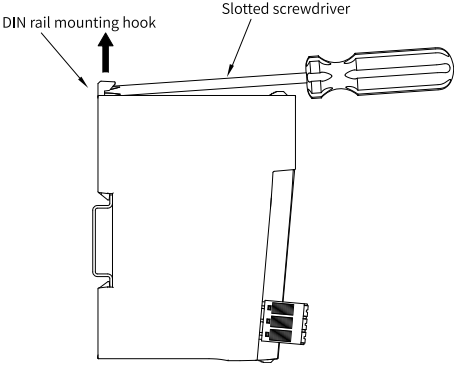

3 Electrical Installation

3.1 Cable Selection

■ Communication Wiring

EtherCAT bus communication adopts shielded Ethernet cables for data transmission, without short circuit, misalignment and poor contact. The length of cables between devices cannot exceed 100m; otherwise, signal attenuation will occur and affect normal communication. It is recommended to use cables specified as follows.

Item	Specification
Cable type	Elastic crossover cable, S-FTP, Cat5
Standard	EIA/TIA568A, EN50173, ISO/IEC11801 EIA/TI Abulletin TSB, EIA/TIA SB40-A&TSB36
Cross sectional area	AWG26
Conductor type	Twisted pair
Pair	4

■ Power Supply Wiring

The cable lug and cable diameter included in the following table are only for reference.

Material Name	Applicable Cable Diameter		KST		Suzhou Yuanli	
	mm^2	AWG	Model	Crimping Tool	Model	Crimping Tool
Tubular lug	0.3	22	E0308	KST2000L	0308	YAC-5
	0.5	20	E0508		0508	
	0.75	18	E7508		7508	
	1.0	18	E1008		1008	
	1.5	16	E1508		1508	

If you use other types of tubular lug, crimp the lug to the cables according to the shape and dimension requirements shown in the figure below.

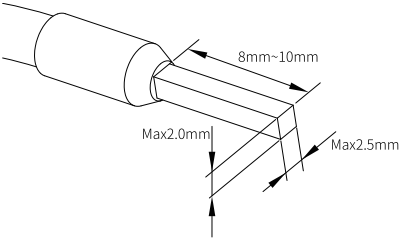

■ External Interface Specifications

Interface Type	Interface Name	Cable Type/ Maximum Length	Description	Terminals	Specification
EtherCAT interface	EtherCAT	Shielded network cable, 100 m	EtherCAT communica-tion port	RJ45 x 2	100 Mbps (100Base-TX)
Power supply	24 V input	3-core unshielded cable, 20 m	24 V power input	6-pin pluggable terminal block	24 V/1 A

3.2 Terminal Wiring

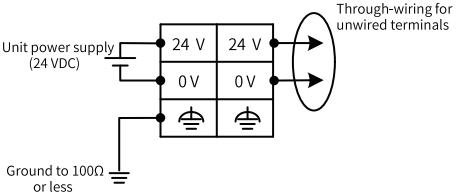

4 Fault Diagnosis

LED indicator		Meaning	Solution
RUN	OFF	No connection between EtherCAT master and slave	Check configuration and parameter assignment; Check the communication address Check that the length and other specifications of the network cable are as specified.
	Blinking	EtherCAT slave is in a state other than state OPERATIONAL	Check slave configuration for any missing, faulty or unconfigured module.
BF	Blinking	No data exchange between EtherCAT master and slave; EtherCAT communication receives non-executable state transition commands ECAT module synchronization error; EtherCAT watchdog error	Check that the cable connector is inserted correctly; Check that the network cable is intact; Re-power on; Check that the PDO configuration is correct.
SF	Blinking	Incorrect configuration; Module error.	Check that the host controller configuration is consistent with the module configuration; Check that the module is not interfered.

5 Programming Examples

1. Create a project and perform hardware configuration.

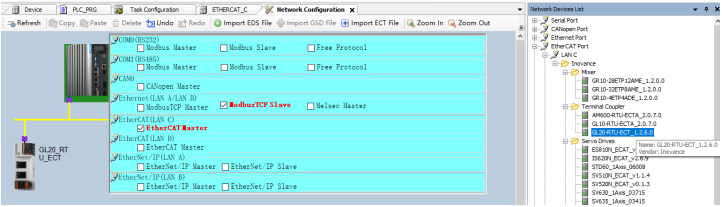

2. Click **Add Device**.

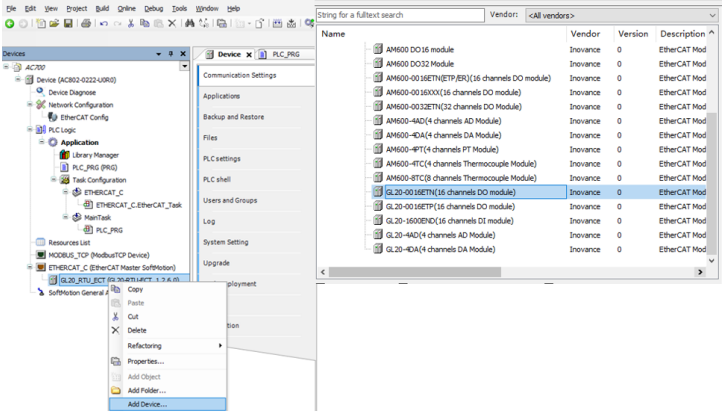

3. After the module is added, configure the module parameters, download the project after compiling and run it.

6 Example of Programming GL20-RTU-ECT Module Together with Other GL20 Series Modules

1. Go to **Toolbox** > **Ethercat Device** > **Inovance Device** > **Terminal Coupler**, and double-click GL20-RTU-ECT to add it.

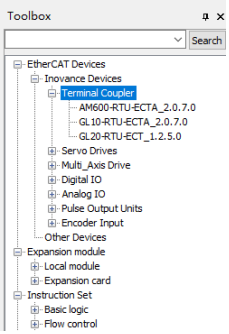

2. Go to **Project Manager** > **Config** > **EtherCAT**, you can see the added coupler.

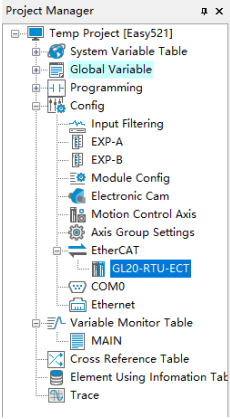

3. Double-click the GL20-RTU-ECT device, click **Slot Configuration**, select the module you want to add and then click **Add/Change**.

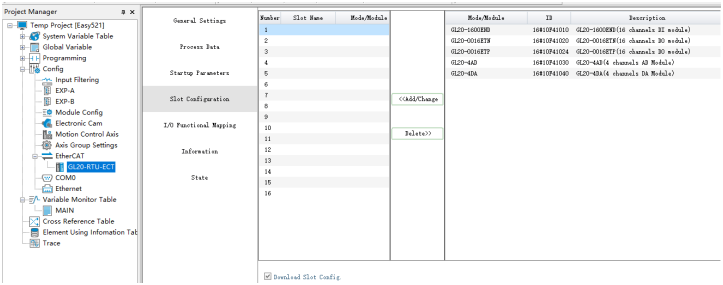

4. Click **Variable_Table** and define the variables.

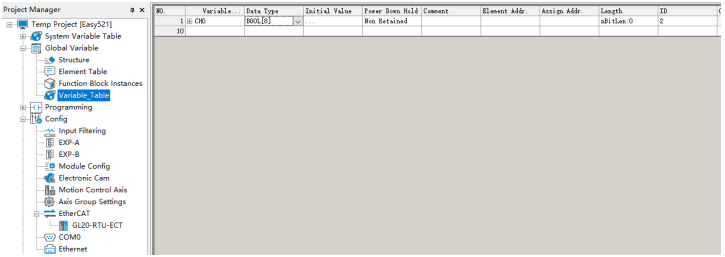

5. Click **I/O Funtional Mapping** and bind the define variables.

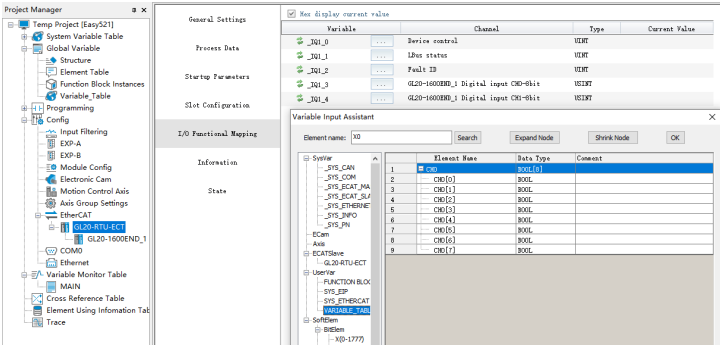

6. Compile the program.

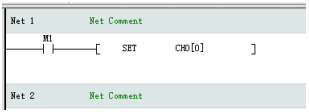

7. After successful compiling, download the project and run it.