INOVANCE

Advancing industrial technology,
for a better world

GR20T-ECT-1600END/3200END Series Digital Input Module

User Guide

Industrial Automation

Intelligent Elevator

New Energy Vehicle

Industrial Robot

Rail Transit

Data code PS00018141A00

Preface

Introduction

The GR20T-ECT-1600END/3200END is a transistor PNP/NPN module with 16/32 digital channels. The module adapts to AM600 series products.

This guide describes the information, mechanical installation, electrical installation, and program commissioning of the product.

Standards compliance

The following table lists the certifications, directives, and standards that the product may comply with. For details about the acquired certificates, see the certification marks on the product nameplate.

Certification	Directive		Standard
CE Certification	EMC Directive	2014/30/EU	**24 VDC products:** EN 61131-2 **220 VAC products:** EN 61131-2 EN 61000-3-2 EN 61000-3-3
	LVD Directive	2014/35/EU	EN 61010-1 EN 61010-2-201
	RoHS Directive	2011/65/EU amended by (EU)2015/863	EN IEC 63000
UL/cUL Certification	-		UL 61010-1 UL 61010-2-201 CAN/CSA-C22.2 No. 61010-1 CSA C22.2 NO. 61010-2-201
KCC Certification	-		-
EAC Certification	-		-
UKCA Certification	Safety Regulations	Electrical Equipment (Safety) Regulations 2016	EN 61010-1 EN 61010-2-201
	EMC Regulations	Electromagnetic Compatibility Regulations 2016	**24 VDC products:** EN 61131-2 **220 VAC products:** EN 61131-2 EN 61000-3-2 EN 61000-3-3
	RoHS Regulations	Directive (RoHS) Regulations 2012	EN IEC 63000

More data

Name	Code	Description
AM600 Series Programmable Controller (NPN Output) User Guide	19010723	Introduces the information, electrical and mechanical design, communication connection, programming tools, operation and maintenance, indicators, MFK keys, and module connection of the product.
GR20T-ECT-1600END/3200END Series Digital Input Module User Guide (This guide)	PS00018055	Introduces the information, mechanical installation, electrical installation, programming, and commissioning of the product.

Revision history

Date	Version	Revision
January 2025	A00	Initial release.

Access to the guide

This guide is not delivered with the product. You can obtain the PDF version in the following ways

- Do keyword search under Service and Support at *www.inovance.com*.
- Scan the QR code on the product with your smart phone.
- Scan the QR code below to install My Inovance app, where you can search for and download user guides.

Warranty disclaimer

Inovance provides warranty service within the warranty period (as specified in your order) for any fault or damage that is not caused by improper operation of the user. You will be charged for any repair work after the warranty period expires.

Within the warranty period, maintenance fee will be charged for the following damage:

- Damage caused by operations not following the instructions in the user guide
- Damage caused by fire, flood, or unusual voltage
- Damage caused by unintended use of the product
- Damage caused by use beyond the specified scope of application of the product
- Damage or secondary damage caused by force majeure (natural disaster, earthquake, and lightning strike)

The maintenance is charged according to the latest Price List of Inovance. If otherwise agreed upon, the terms and conditions in the agreement shall prevail.

For details, see Product Warranty Card.

Safety Instructions

Safety disclaimer

1. Read and follow the safety instructions when installing, operating, and maintaining the equipment.
2. To ensure your safety and prevent damage to the equipment, follow the marks on the equipment and all the safety instructions in this guide.
3. "CAUTION", "WARNING", and "DANGER" items in this guide do not indicate all safety precautions that need to be followed; instead, they just supplement the safety precautions.
4. Use this equipment according to the designated environment requirements; otherwise, a fault may occur. Malfunction or damage caused by improper use is not covered by warranty.
5. Inovance shall take no responsibility for any personal injury or property damage caused by improper use.

Safety levels and definitions

DANGER	"DANGER" indicates that failure to comply with the notice will result in death or severe personal injuries.
WARNING	"WARNING" indicates that failure to comply with the notice may result in death or severe personal injuries.
CAUTION	"CAUTION" indicates that failure to comply with the notice may result in minor personal injuries or equipment damage. Keep this user guide properly for future use and deliver it to the end user.

Control system design
DANGER • Provide a safety circuit outside the PLC so that the control system can still work safely once external power failure or controller fault occurs. • Add an external fuse or circuit breaker to prevent the module from smoking or catching fire due to long-time overcurrent caused by operation above rated current or load short-circuit.
WARNING • An emergency stop circuit, a protection circuit, a forward/reverse operation interlocked circuit, and an upper position limit and lower position limit interlocked circuit must be set in the external circuits of PLC to prevent damage to the equipment. • To ensure safe operation, for the output signals that may cause critical accidents, use external protection circuit and safety mechanism. • Once the CPU of the PLC detects an exception in the system, all outputs may be closed; however, when a fault occurs in the controller circuit, the output may not be under control. Therefore, it is necessary to design an appropriate external control circuit to ensure normal operation. • If the output units such as relays or transistors are damaged, the output may fail to switch between ON and OFF states according to the commands. • The PLC is designed to be used in an indoor electrical environment compliant with overvoltage category II. The power supply must have a system-level surge protector to ensure that overvoltage caused by lightning shock cannot be applied to power supply input terminals, signal input terminals, and control output terminals of the PLC, therefore preventing damage to the product.

Installation
WARNING • Installation must be carried out by skilled personal who have undergone specialized electrical training and possess comprehensive electrical expertise. • Disconnect all external power supplies of the system before installing/removing the module. Failure to do so may result in electric shock, module fault, or malfunction. • Do not use the PLC in environments with dust, greasy smoke, conductive dust, corrosive or combustible gases, exposed to high temperature, condensation, wind & rain, or subject to vibration and shock. Electric shock, fire, and malfunction may also result in damage or deterioration to the product. • The PLC is open-type equipment that must be installed in a control cabinet with lock (cabinet housing protection > IP20). Only the skilled personnel who have undergone specialized electrical training and possess comprehensive electrical expertise can open the cabinet.
CAUTION • Prevent metal filings and wire ends from dropping into ventilation holes of the PLC during installation. Failure to comply may result in fire, fault, and malfunction. • Ensure there are no unwanted matters on ventilation surface. Failure to comply may result in poor ventilation, which may cause fire, fault, or malfunction. • Ensure the module is connected to the respective connector securely and hook the module firmly. Improper installation may result in malfunction, fault, or fall-off.

Wiring
DANGER • Wiring must be carried out by skilled personnel who have undergone specialized electrical training and possess comprehensive electrical expertise. • Disconnect all external power supplies of the system before wiring. Failure to comply may result in electric shock, module fault, or malfunction. • After wiring, install the terminal cover attached to the product before power-on or operation. Failure to comply may result in electric shock. • Insulate the cable terminals properly to ensure the insulation distance between cables will not be shortened after cables are connected to the terminal block. Failure to comply may result in electric shock or damage to the product.
CAUTION • To avoid electric shock, cut off the power supply before connecting the product to the power supply. • The input power supply of this product is 24 VDC. Power supplies outside ±20% of 24 VDC can cause severe damage to the product. Therefore, check whether the DC power supply provided by the switching-mode power supply is stable at a regular interval.

Operation and maintenance
CAUTION • Operation and maintenance must be carried out by skilled personnel who have undergone specialized electrical training and possess comprehensive electrical expertise. • Do not touch the terminals while the power is on. Failure to comply may result in electric shock or malfunction. • Disconnect all external power supplies of the system before cleaning the module or re-tightening screws on the terminal block or the connector. Failure to comply may result in electric shock. • Disconnect all external power supplies of the system before assembling/disassembling the module or connecting/removing the communication cables. Failure to comply may result in electric shock or malfunction.
Safety Recommendations • In the position where the operator directly touches the machinery part, for example, where a machinery tool is loaded/unloaded, or where a machine runs automatically, the on-site manual operating devices and any other alternative means must be carefully arranged and designed so that they are independent of the PLC and can start or terminate the automatic running of the system. • If modification on the program is needed during system operation, use the lock function or other protective measures. Ensure that only authorized personnel can make the necessary modifications.

Disposal
CAUTION • Treat the scrapped product as industrial waste. Dispose of the battery according to local laws and regulations. • Recycle retired equipment by observing industry waste disposal standards to avoid environmental pollution.

1 Product Information

1.1 Model and Nameplate

Model

G R 20 T -ECT-1600 E N D

① ② ③ ④ ⑤ ⑥ ⑦ ⑧ ⑨

① **Product Family** G: Inovance controller general-purpose module	⑥ **Number of Input Channels** 1600: 16 configurable input channels 3200: 32 configurable input channels
② **Product Type** R: Remote module	⑦ **Product Type** E: Logic I/O expansion module
③ **Series** 20: 20 series	⑧ **Function Type** N: No output
④ **Product Form** T: Horizontal	⑨ **Voltage Type** D: 24 VDC
⑤ **Communication Protocol** ECT: EtherCAT	-

Nameplate

- **GR20T-ECT-1600END**

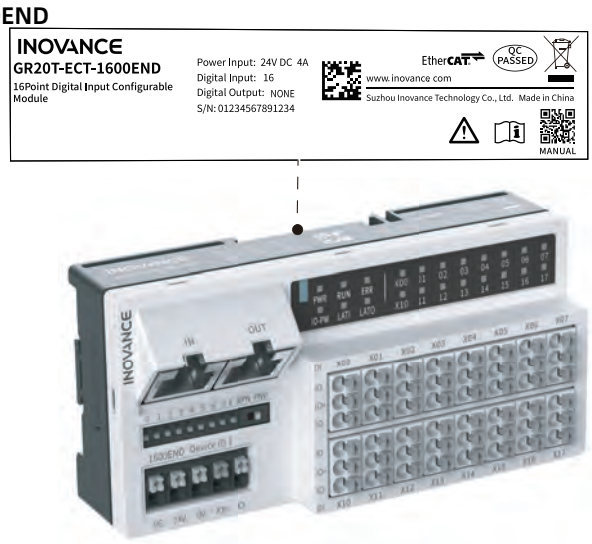

- **GR20T-ECT-3200END**

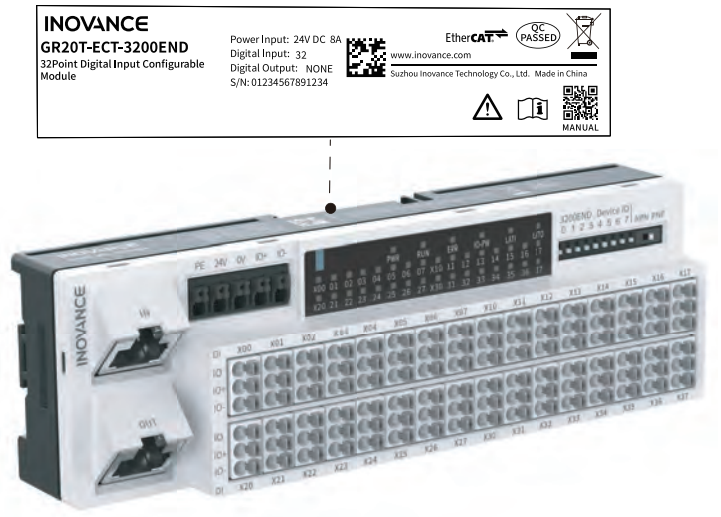

The data for ordering the product is shown in the following table.

Model	Description	Material Code	Applicable Model
GR20T-ECT-1600END	GR20T series 16-channel digital input module	01440860	AM600 series
GR20T-ECT-3200END	GR20T series 32-channel digital input module	01440902	

1.2 Components

The GR20T-ECT-1600END and GR20T-ECT-3200END models share the same components. Take the GR20T-ECT-1600END model as an example for component description.

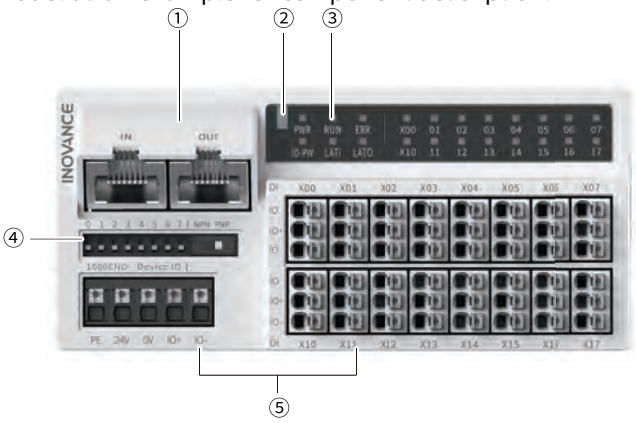

No.	Component	Description		
①	EtherCAT communica-tion interface	IN	EtherCAT communica-tion input	The IN interface supports EtherCAT communication data input with connection to PLC, communication interface module, or the upstream EtherCAT slave.
		OUT	EtherCAT communica-tion output	The OUT interface supports EtherCAT communication data output with connection to the downstream EtherCAT slave.
②	Color identification	Red: Digital output	Orange: Analog output	
		Gray: Digital input	Green: Analog input	
		White: Communication	Blue: Other modules	

No.	Component	Description		
③	Signal indicator	PWR	System power supply indicator	The indicator is solid ON for power-on and OFF for power-off (24 VDC).
		RUN	Running state indicator	The ECT communication status indicator indicates status of the ECT simple slave. • OFF: The ECT module is in the initial (INIT) state. • Flashing: The ECT module is in the pre-operational (PREOP) state. • Single flashing: The ECT module is in the safe-operational (SafeOP) state. • Solid ON: The ECT module is in the operational (OP) state. • Double flashing: The ECT module is in the bootstrap state.
		ERR	Fault indicator	The indicator is ON when the module is faulty.
		IO-PW	I/O power indicator	The indicator is solid ON for power-on and OFF for power-off (24 VDC).
		LATI	ECT_IN network port indicator	• OFF: No connection • Flashing: Connected with data being exchanged • Solid ON: Connected with no data exchange
		LATO	ECT_OUT network port indicator	• OFF: No connection • Flashing: Connected with data being exchanged • Solid ON: Connected with no data exchange
		X00 to X07	Signal indicator of DI0 to DI7	The indicator turns green when the DI signal is active.
		X10 to X17	Signal indicator of DI8 to DI15	
④	DIP switch	Device ID (0 to 7)	Slave address DIP switch (with 8 positions)	Toggling up a position to turn it ON and toggling down a position to turn it OFF. For example, when position 0 is toggled up to ON, the corresponding Device ID is 1.
		NPN (sink mode) and PNP (source mode)	DIP switch for switching DI type between NPN and PNP	The default DI type is PNP.

No.	Component	Description
⑤	User terminal	For details, see *"3.2 Terminal Definition" on page 25*

Note

- Flashing: The indicator is on for 200ms and off for 200ms, repeating this cycle.
- Single flashing: The indicator is on for 200ms and off for 1000ms, repeating this cycle.
- Double flashing: The indicator is on for 200ms, off for 200ms, on for 200ms, and off for 1s, repeating this cycle.

Caution

After the module is powered on, do not touch or toggle the DIP switches. Failure to comply can result in abnormal system functions.

1.3 Technical Specifications

General specifications

Item	GR20T-ECT-1600END	GR20T-ECT-3200END
IP rating	IP20	
Dimensions (W x H x D)	110 mm x 50 mm x 35.9 mm	160 mm x 50 mm x 35.9 mm
Weight	About 121.8 g	About 186.0 g

Power supply specifications

Item	Specification
Rated voltage of US power supply	24 VDC (20.4 VDC to 28.8 VDC)
Maximum current of US power supply	1 A (@24 V)
US reverse polarity protection	Supported
Rated voltage of UA power supply	24 VDC (20.4 VDC to 28.8 VDC)
Output current of UA power supply	• GR20T-ECT-1600END: 0.25 A for a channel, 1 A for 4 channels, and 4 A for the entire module (max @24 V). • GR20T-ECT-3200END: 0.25 A for a channel, 1 A for 4 channels, and 8 A for the entire module (max @24 V).
UA reverse polarity protection	Supported
Reversed polarity protection of US system power supply	Supported
Short circuit protection of US system power supply	Supported

Item	Specification
Reversed polarity protection of UA I/O power supply	Supported
Short circuit protection of UA I/O power supply	Supported
I/O power supply diagnosis	Supports identifying an abnormal I/O power failure

EtherCAT specifications

Item	Specification
Communication protocol	EtherCAT protocol (SDO not supported)
Communication speed	100 Mbit/s (100Base-TX)
Work mode	Full duplex
Transmission medium	Shielded cables of Cat 5e or higher
Transmission distance	100 m
Interface type	RJ45

Input specifications

Item	GR20T-ECT-1600END	GR20T-ECT-3200END
Configuration of inputs	Supports configuration of the inputs of NPN (sink mode) and PNP (source mode) types	
Input type	Digital input	
Input mode	NPN (sink mode) and PNP (source mode)	
Maximum number of input channels	16	32
Input voltage class	24 VDC (20.4 VDC to 28.8 VDC)	
Input current	3.5 mA (typical value @24 V)	
ON voltage	> 15 VDC	
OFF voltage	< 5 VDC	
Hardware response time upon ON/OFF	100μs(Max.)/100μs(Max.)	
Input impedance	6.8 kΩ to 7.8 kΩ	
Isolation	Isolated	
Input indicator	The input indicator turns ON when the input is in the active state.	

Item	GR20T-ECT-1600END	GR20T-ECT-3200END
Input derating (without dust cover)	• The module works at full load at 45° C. The number of simultaneously ON input channels does not exceed 16 and the load capacity of the UA power does not exceed 4 A. • The module works at 50% of full load at 55°C. The number of simultaneously ON input channels does not exceed 8 and the load capacity of the UA power does not exceed 2 A.	• The module works at full load at 45° C. The load capacity of the UA power does not exceed 8A. • The module works at 50% of full load at 55°C. The number of simultaneously ON input channels does not exceed 16 and the load capacity of the UA power does not exceed 4 A.
Input derating (with dust cover)	• The module works at full load at 40° C. The number of simultaneously ON input channels does not exceed 16 and the load capacity of the UA power does not exceed 4 A. • The module works at 50% of full load at 50°C. The number of simultaneously ON input channels does not exceed 8 and the load capacity of the UA power does not exceed 2 A.	• The module works at full load at 40° C. The load capacity of the UA power does not exceed 8A. • The module works at 50% of full load at 55°C. The number of simultaneously ON input channels does not exceed 16 and the load capacity of the UA power does not exceed 4 A.

Software specifications

Item	Specification
Input PDO data volume	• GR20T-ECT-1600END: 8 bytes • GR20T-ECT-1600END: 16 bytes
ECT simple slave	Meets ECT certification requirements of conformance
Basic ECT function	Supports the ECT ring-type networking
Input filter (I)	Supports configuring the input filter through PDO. The filter can be set to a value including no-filter, 0.25ms, 0.5ms, 1ms, 2ms, 4ms, 8ms, 16ms, and 32ms. The default value is 1ms, which is adopted when the module is enabled. The filter parameter applies to all channels.
Input terminal fault detection and indication	Not supported
Input indicator configuration	Supports configuring the input indicator to become ON upon input.
Station number configuration	Supports configuring the station number from 1 to 255 through the DIP switch. This method is enabled when at least one of the switch positions is set to non-zero.
	Supports configuring the station number from 0 to 65535 through the software tool. This method is enabled when all switch positions are set to 0.

1.4 Environmental Specifications

Item	Specification
Operating environment	Free from conductive dust, conductive fibers, explosive dust, flammable gases, water mist/greasy dirt, corrosive dusts/gases, strong vibration, and repetitive shock
Altitude	≤ 2000 m
Pollution degree	2

Item	Specification
Noise immunity	2 kV on power supply cable (compliant with IEC 61000-4-4)
Overvoltage category	I
EMC immunity level	Zone B, IEC61131-2
ESD protection level	Contact discharge +/-6 kV, air discharge +/-8 kV
Vibration resistance	• Application scenario: The module passes the sinusoidal vibration test according to IEC60068-2-6. (Test conditions: 3.5 mm amplitude at 5 Hz to 8.4 Hz; 1 g gravitational acceleration at 8.4 Hz to 200 Hz; 10 cycles per axial direction) • Transport scenario: The module passes the random vibration test according to IEC 60068-2-64. (Test conditions: 0.01g^2/Hz at 5 Hz to 100 Hz; 0.001g^2/Hz at 200 Hz, 1.14g Grms)
Shock resistance	Application/Transportation scenario: The module passes the test according to IEC60068-2-27. (Test conditions: 15 g peak gravitational acceleration; 11ms pulse width; 18 times in X/Y/Z directions)
Operating temperature/humidity	• Temperature: -20°C to +55°C • Relative humidity: 10% to 90% RH, non-condensing **Note:** Install a fan or air conditioner in the direction of the ventilation holes when the operating temperature is greater than the maximum allowable temperature.
Storage temperature/humidity	• Temperature: -40°C to +70°C • Relative humidity: < 90% RH, non-condensing

2 Mechanical Installation

2.1 Installation Precautions

- Before installing or removing the module, ensure that the module is powered off.
- Do not hot swap the modules. Otherwise, the modules may be damaged by overcurrent or overvoltage, and the communication interface module or PLC may be subject to restart, user data loss, or corruption.
- Prevent the enclosure or terminals of the module from dropping or being impacted to avoid damage to the module.

2.2 Installation Position

Installation limits

The inputs of the GR20T-ECT-1600END/3200END module are derated based on the actual number of I/O channels (taking the configuration without a dust cover as an example).

GR20T-ECT-1600END

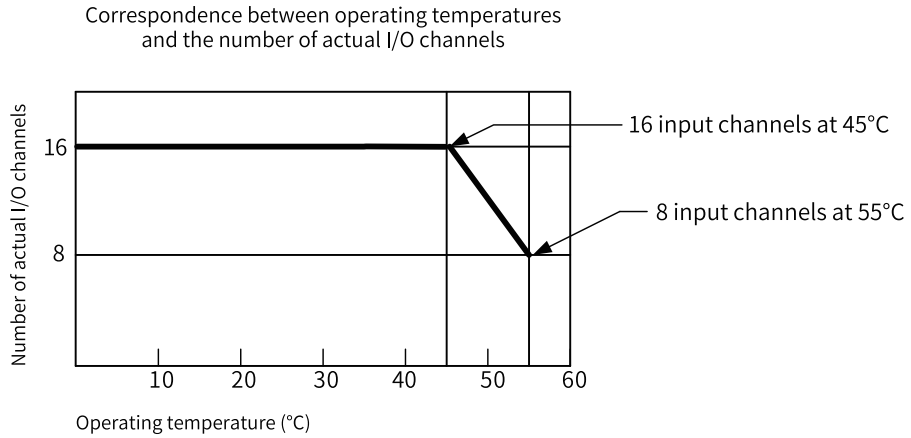

GR20T-ECT-3200END

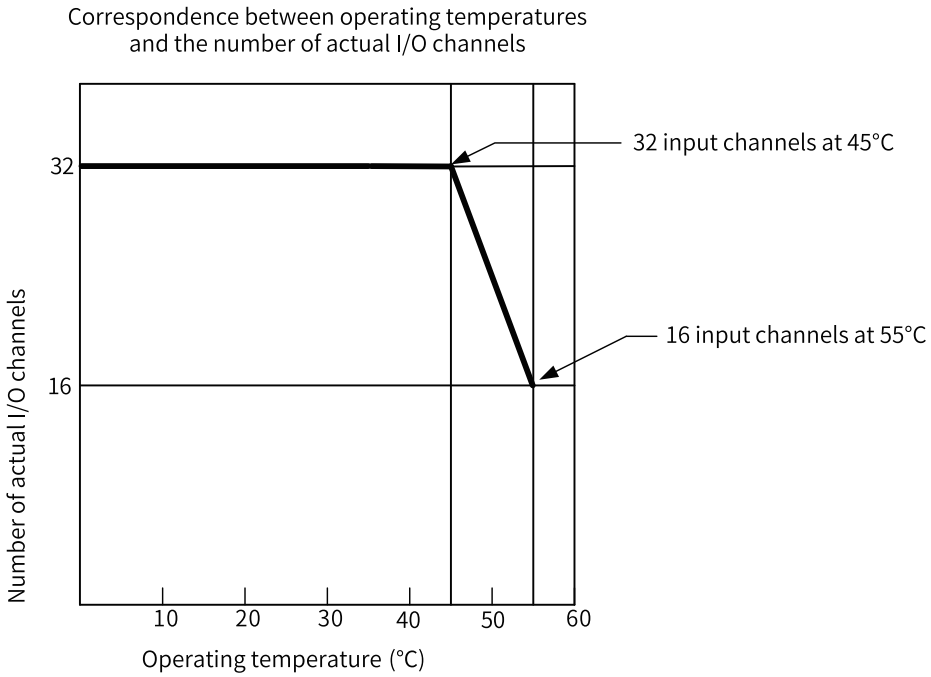

Optimal installation position

It is recommended to install the product horizontally. To ensure normal ventilation and heat dissipation and allow sufficient wiring space, reserve enough clearance (in mm) around the product, as shown in the following figure. Different installation modes require different operating temperatures.

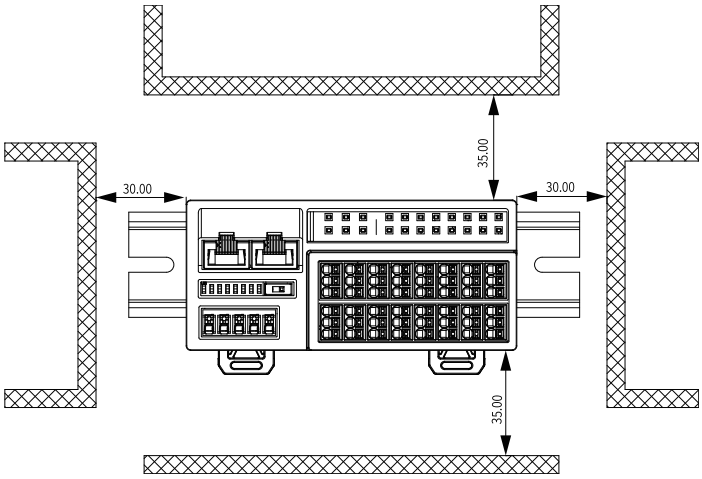

Note

If there is a high-temperature heat source (heater, transformer, large resistor, etc.) in vicinity of the product, keep the product away from the heat source by at least 100 mm.

Other installation positions

Other installation positions are shown below. The same clearances as the optimal installation position are also required.

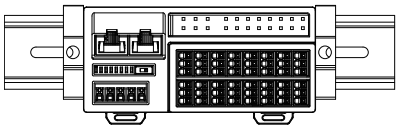

Horizontal installation with
a horizontal DIN rail

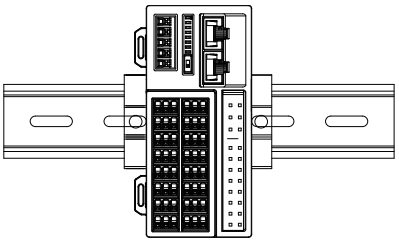

Vertical installation with
a horizontal DIN rail

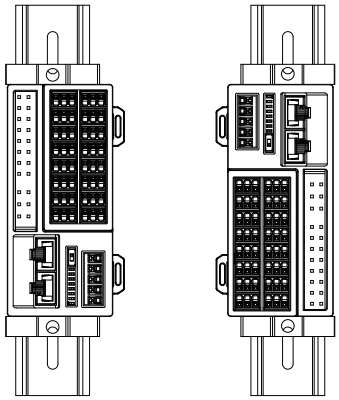

Vertical installation with
a vertical DIN rail

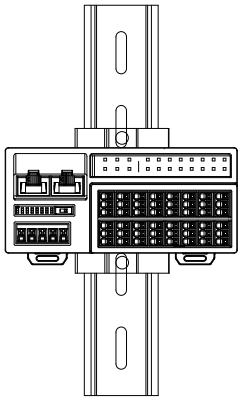

Horizontal installation
with a vertical DIN rail

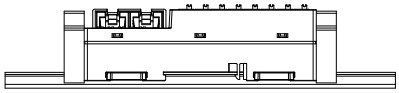

Installed at the bottom of
the electrical cabinet

Note

The preceding mounting options allow the installation of external screws.

2.3 Installation Dimensions

The module installation dimensions (in mm) are shown in the figure below.

- GR20T-ECT-1600END
  - Outline dimensions of the module

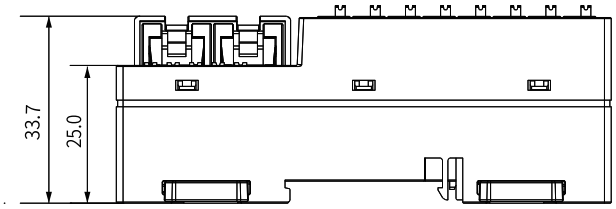

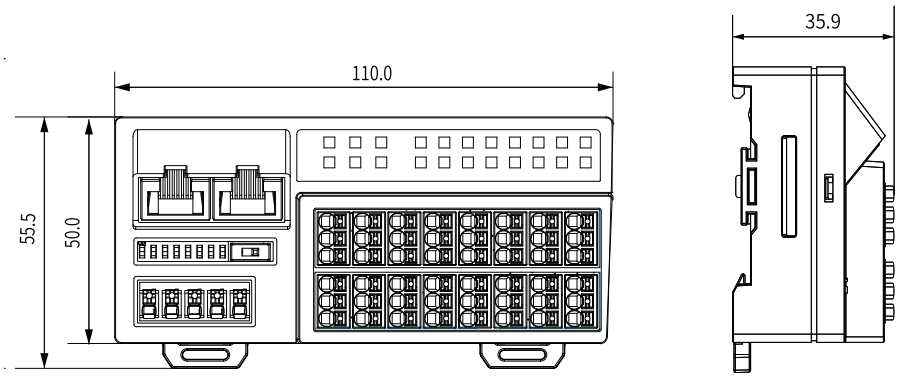

- Installation dimensions of external screws

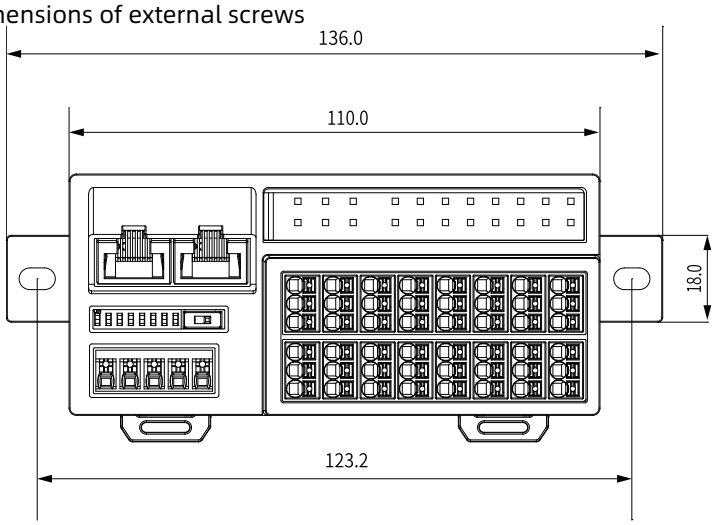

- GR20T-ECT-3200END
  - Outline dimensions of the module

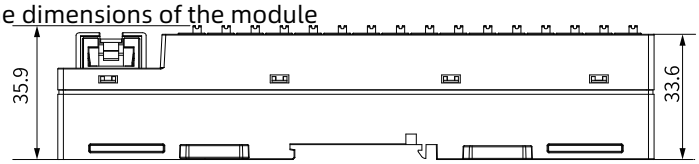

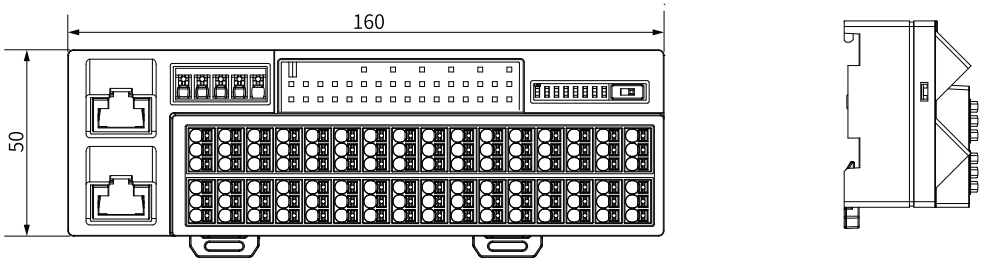

  - Installation dimensions of external screws

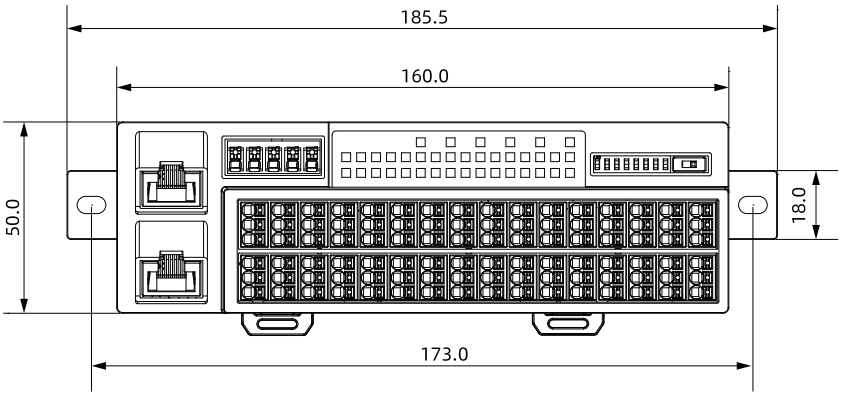

2.4 Installation Method

The GR20T-ECT-1600END and GR20T-ECT-3200END models share the same structure. Take the GR20T-ECT-1600END model as an example for installation instructions.

Module installation

The module can be installed in three modes: horizontal installation with a horizontal DIN rail, vertical installation with a horizontal DIN rail, and installation with screws.

The DIN rail used for installation shall comply with IEC 60715 (width: 35 mm, thickness: 1 mm). The dimensions (unit: mm) are shown below.

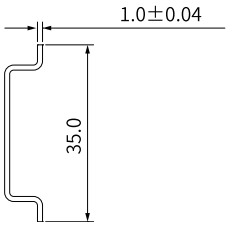

Caution

The module is mounted onto a DIN rail in conformity with IEC 60715 (thickness: 1 mm). If the thickness of the DIN rail is not as required, the product will not fit in place and function properly as the snap-fit joint does not work.

- **Horizontal installation with a horizontal DIN rail**
  Hang the slot at the top of the module on the rail, rotate the module, and press down the bottom until you hear a click of the DIN rail snap-fit joint rebounding, as shown in the following figure.

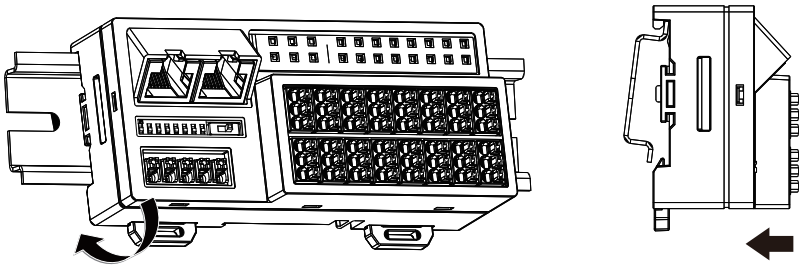

After the module is installed, the DIN rail snap-fit joint will automatically move upwards to lock the module to the rail. If the snap-fit joint does not move upwards, press the bottom of the snap-fit joint upwards to lock the module, as shown in the following figure.

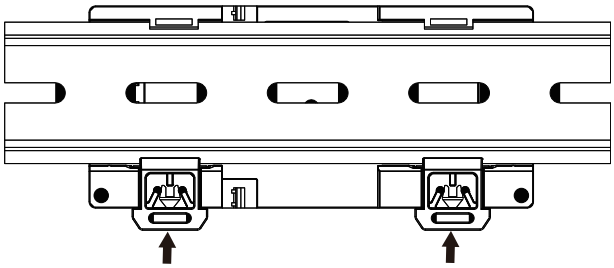

- **Vertical installation with a horizontal DIN rail**

1. Hang the slot at the upper part of the module on the rail, rotate the module, and press down the bottom until you hear a click of the DIN rail snap-fit joint rebounding, as shown in the following figure.

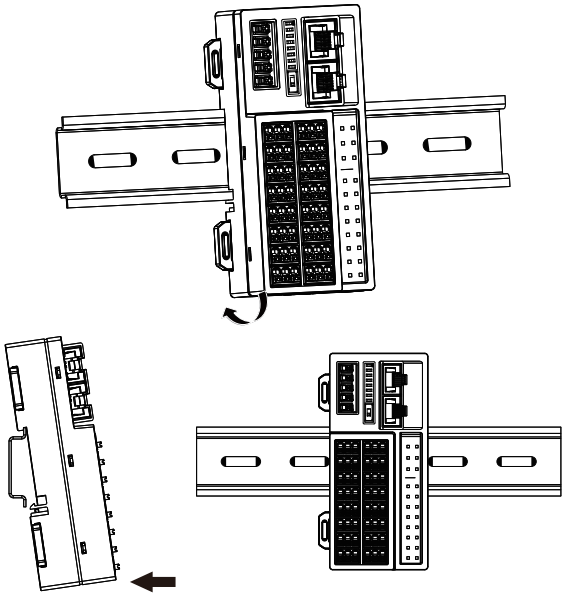

2. Install and secure the side plates on guide rails on both sides of the module properly, as shown in the following figure.

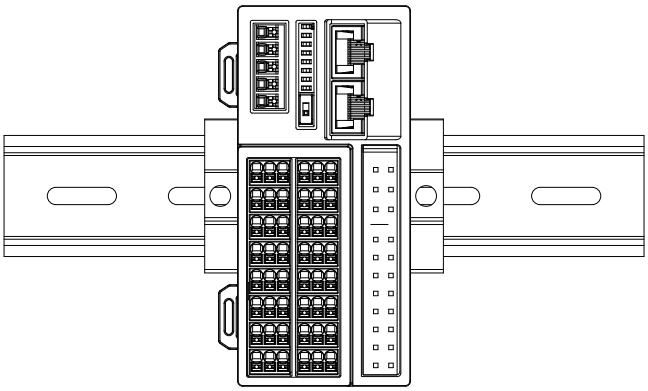

Note

- After the module is installed in place, the snap-fit joint will automatically rebound to lock the module to the rail.
- Ensure that the network port faces up when the module is mounted vertically onto the horizontal DIN rail.

- **Installation with screws**

1. Push the snap-fit joints (standard accessories in the accessory kit) from both sides into the bottom of the module, in the direction indicated by the following figure.

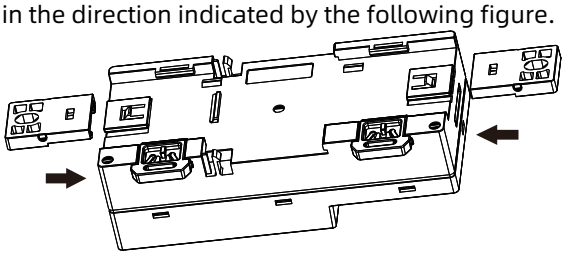

2. Push the snap-fit joints onto the module until you hear a click of the joint rebounding, as shown in the following figure.

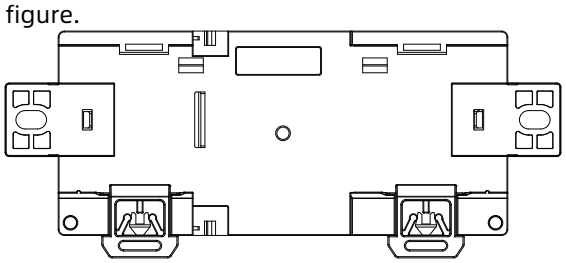

3. Secure the snap-fit joints with M4 screws, as shown in the following figure.

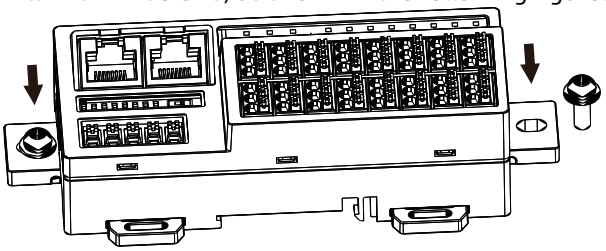

Module removal

- **Removal for horizontal installation with a horizontal DIN rail**

1. Pry the DIN snap-fit joint downwards with a disassembly tool such as screwdriver to release the joint, as shown in the following figure.

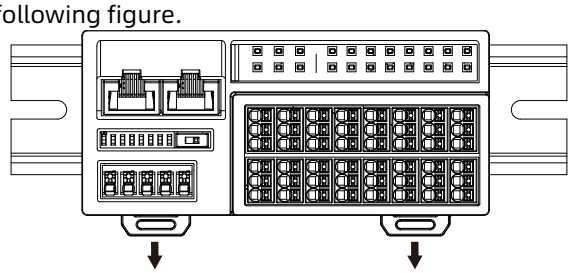

The following figure indicates that the snap-fit joint has been released.

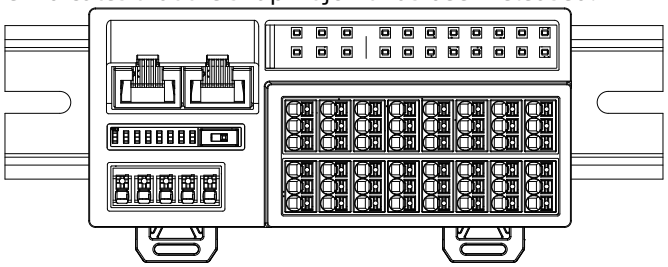

2. Rotate and remove the module out of the guide rail, as shown in the following figure.

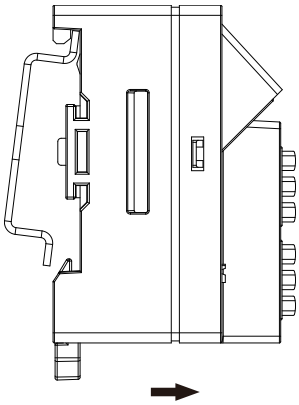

- **Removal for vertical installation with a horizontal DIN rail**

1. Remove all cables from the module.
2. Push the module upwards in the direction indicated by the arrow, as shown in the following figure.

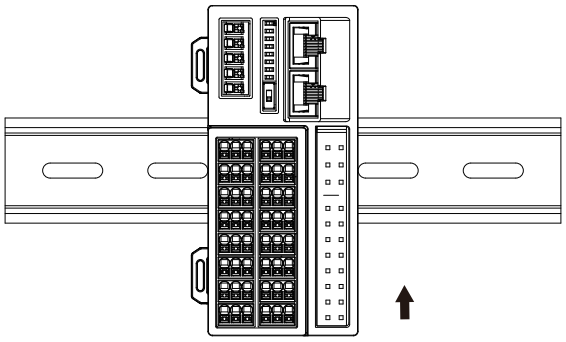

3. When pushing the module upwards, move the top of the module away from the guide rail in the direction indicated by the arrow, as shown in the following figure.

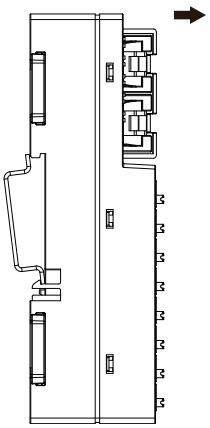

4. Rotate and remove the module out of the guide rail, as shown in the following figure.

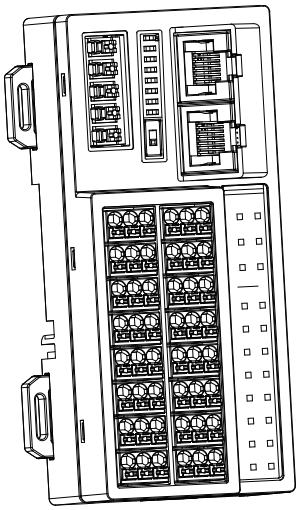

- **Removal for installation with screws**

1. Remove the two M4 screws on both sides of the module using a screwdriver, as shown in the following figure.

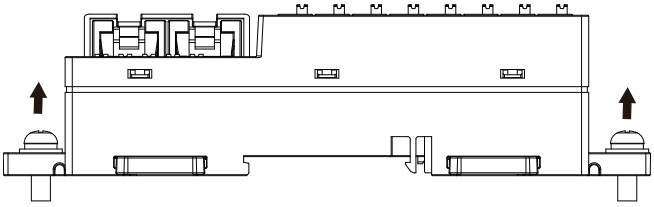

2. Remove the snap-fit joints manually, as shown in the following figure.

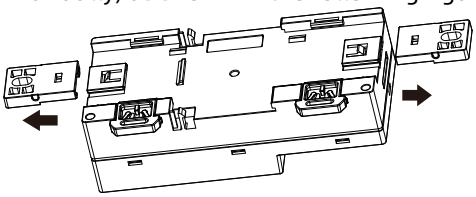

The module has been removed successfully, as shown in the following figure.

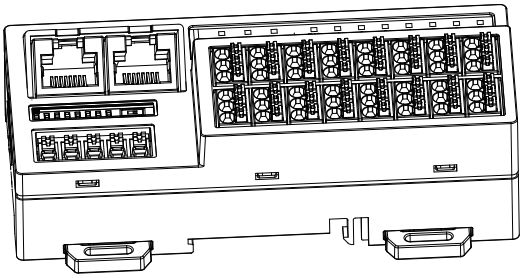

2.5 Dust Cover Installation (Optional)

The dust cover is available. The order data is shown in the following table.

Model	Description	Material Code	Applicable model
GR20T-ECT-16P-FCZ	GR20T-ECT-16P-FCZ-GR20T series dust cover	01480056	GR20T-ECT-1600END
GR20T-ECT-32P-FCZ	GR20T-ECT-32P-FCZ-GR20T series dust cover	01480057	GR20T-ECT-3200END

The dust cover is designed to prevent dust, splashing, and impact. It is made of transparent PC, which allows you to observe the running state of the module at any time. It is suitable for non-standard equipment and intelligent production lines.

Dust cover dimensions

- GR20T-ECT-16P-FCZ

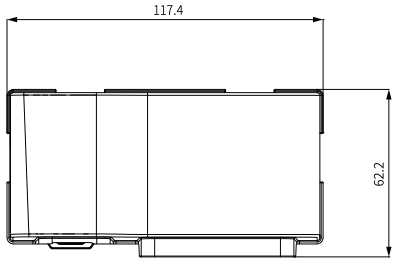

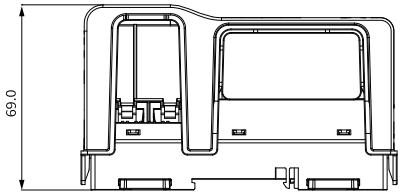

- GR20T-ECT-32P-FCZ

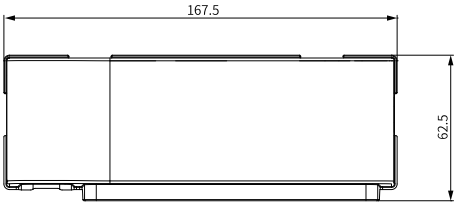

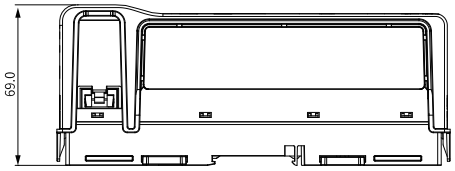

The GR20T-ECT-1600END and GR20T-ECT-3200END models share the same dust cover structure. Take the GR20T-ECT-1600END model as an example for dust cover installation instructions.

Pre-installation instructions

- The dust cover with a retaining plate (by default) at the cable outlet can be used together with I/O cables of diameters no more than 0.35 mm^2 to connect the module, as shown in the following figure.

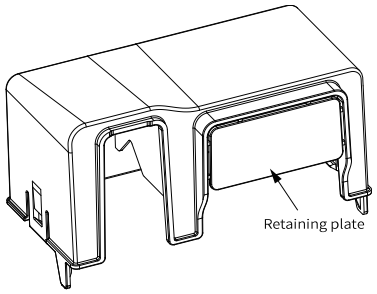

- The dust cover without retaining plate (which can be removed manually or with a tool) can be used together with I/O cables of diameters no more than 0.75 mm^2 to connect the module, as shown in the following figure.

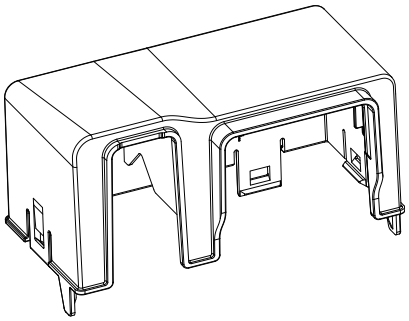

Installation procedure

1. Align the dust cover with the module and route the network cable and I/O cable through the cable slots, as shown in the following figure.

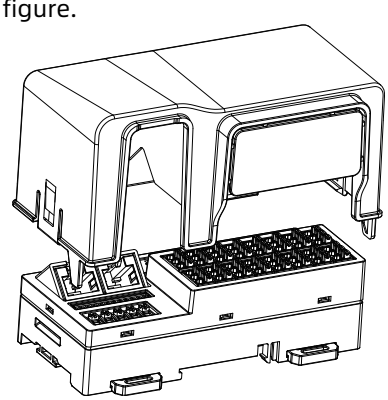

2. Press on both sides of the dust cover in the direction indicated in the following figure until you hear a click.

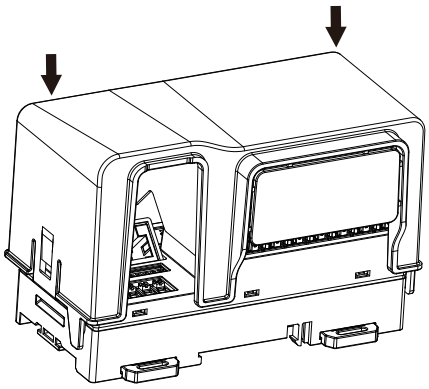

Dust cover removal

Rotate the dust cover in the direction indicated in the following figure to release the two snap-fit joints from the slot.

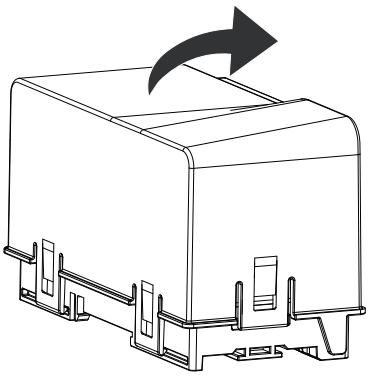

3 Electrical Installation

3.1 Cable Selection

The cable lug and cable diameter included in the following table are only for reference.

Material Name	Cable Diameter		KST		Suzhou Yuanli	
	mm^2	AWG	Model	Crimping Tool	Model	Crimping Tool
Tubular lug	0.3	22	E0308	KST2000L	0308	YAC-5
	0.5	20	E0508		0508	
	0.75[1]	18	E7508		7508	

If other types of tubular lug are used, crimp the lug to the cables according to the shape and dimension requirements shown in the figure below.

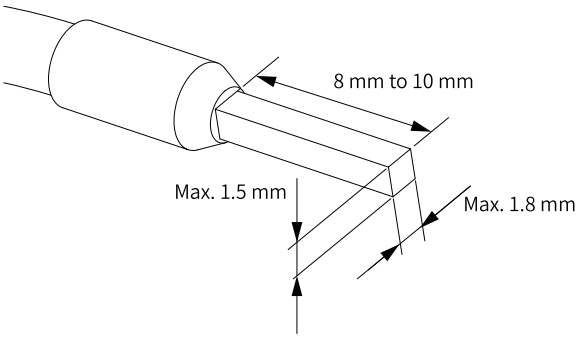

[1]: For 18 AWG cables with a diameter of 0.75 mm^2, it is recommended to use naked cable connectors rather than tubular lugs.

3.2 Terminal Definition

- **GR20T-ECT-1600END**

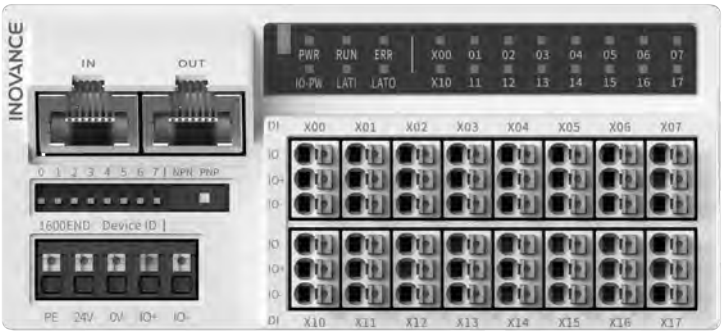

Signal	Terminal	Terminal	Signal
DI0	X00	X10	DI8
DI1	X01	X11	DI9
DI2	X02	X12	DI10
DI3	X03	X13	DI11
DI4	X04	X14	DI12
DI5	X05	X15	DI13
DI6	X06	X16	DI14
DI7	X07	X17	DI15

Refer to the following table for the correspondence between power supply terminals and signal indicators.

Power Supply Terminal	Description	Signal Indicator
PE	Protective grounding	-
24V	US system power supply +	PWR
0V	US system power supply -	
IO+	UA field power supply +	IO-PW
IO-	UA field power supply -	

- **GR20T-ECT-3200END**

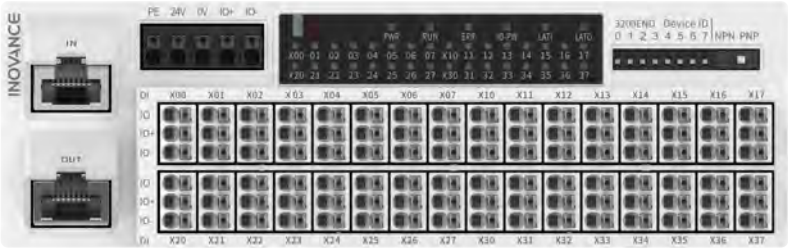

Signal	Terminal	Terminal	Signal
DI0	X00	X20	DI16
DI1	X01	X21	DI17
DI2	X02	X22	DI18
DI3	X03	X23	DI19
DI4	X04	X24	DI20
DI5	X05	X25	DI21
DI6	X06	X26	DI22
DI7	X07	X27	DI23
DI8	X10	X30	DI24
DI9	X11	X31	DI25
DI10	X12	X32	DI26
DI11	X13	X33	DI27
DI12	X14	X34	DI28
DI13	X15	X35	DI29
DI14	X16	X36	DI30
DI15	X17	X37	DI31

Refer to the following table for the correspondence between power supply terminals and signal indicators.

Power Supply Terminal	Description	Signal Indicator
PE	Protective grounding	-
24V	US system power supply +	PWR
0V	US system power supply -	
IO+	UA field power supply +	IO-PW
IO-	UA field power supply -	

3.3 Terminal Wiring

Precautions

- Do not bundle the expansion cable together with power cables (with high voltage and large current) that produce strong interference signals; otherwise, the expansion cable may be influenced by noise, surge, or induction. Separate it from other cables and avoid cabling in parallel.
- Use recommended cables and adapter boards for connection. It is recommended that shielded cables be used as expansion cables to enhance anti-interference capacity.
- Apply single-point grounding for the shielding of shielded cable and solder sealed cable.

Circuit block diagram and wiring diagram

Sink mode

- **GR20T-ECT-1600END**

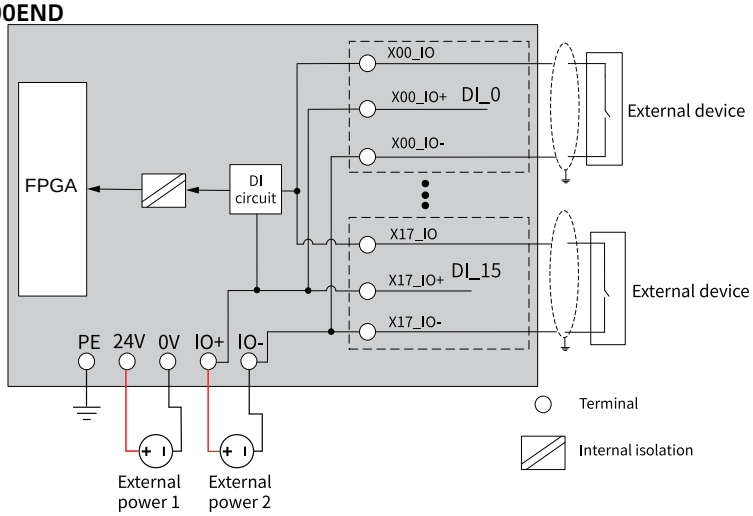

- **GR20T-ECT-3200END**

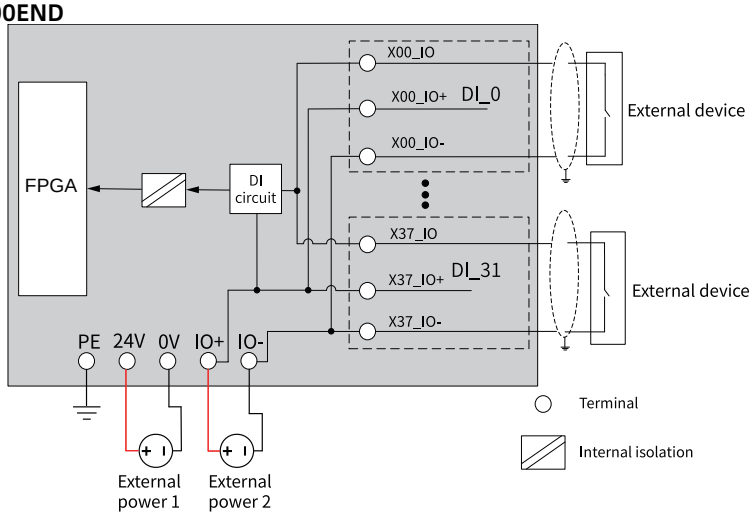

Source mode

- **GR20T-ECT-1600END**

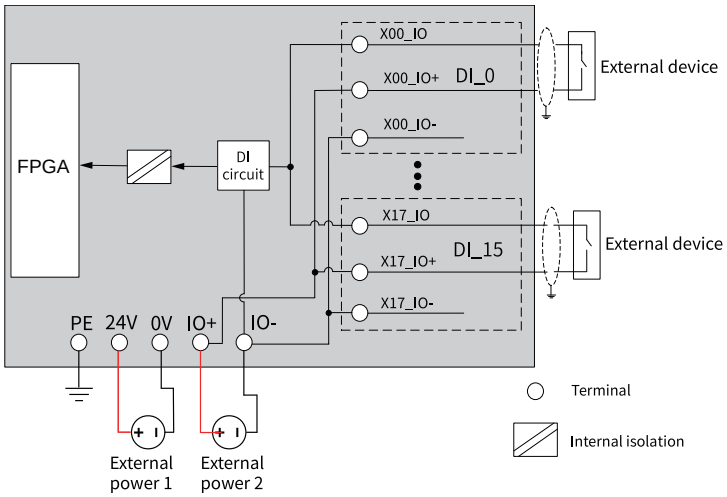

- **GR20T-ECT-3200END**

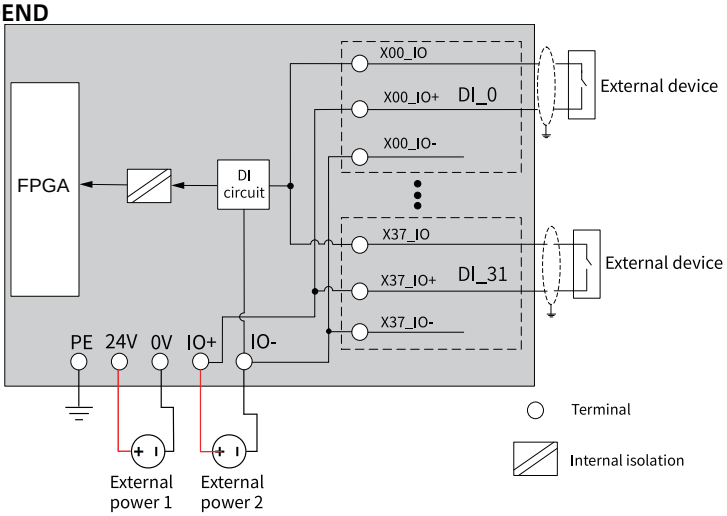

4 Program Commissioning

The following is an example where the AM600 master is used as the primary control module.

1. In the "Devices" pane, double-click "Network Configuration". Click the AM600 PLC figure and check "EtherCAT Master" to enable the PLC as an EtherCAT master.

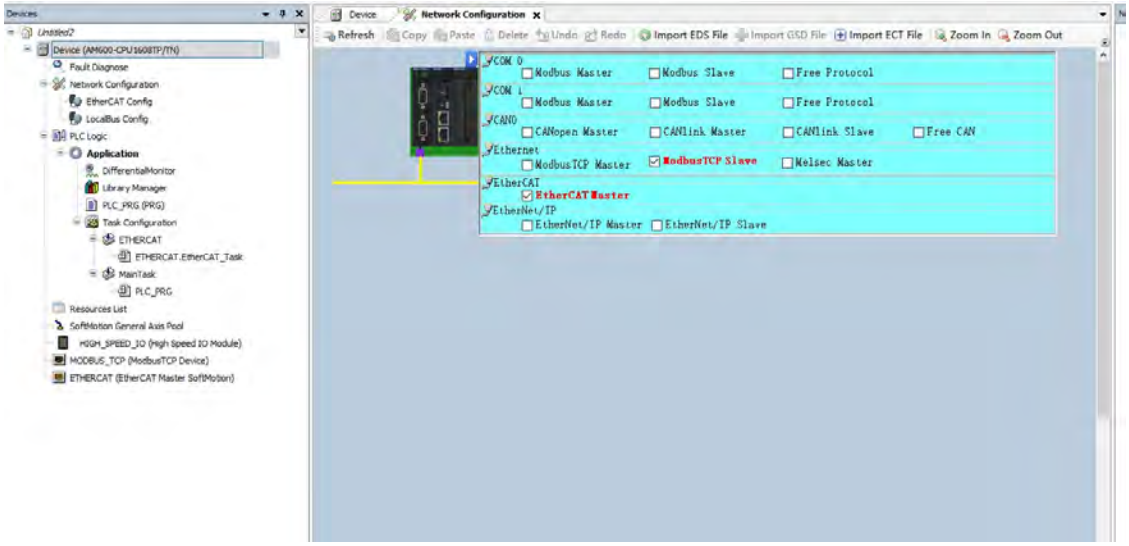

2. In the "Devices" pane, right-click "ETHERCAT(EtherCAT Master SoftMotion)", select "Scan For Devices", and add the scanned device.

   a. Click "Scan For Devices". After the module is successfully scanned, click "Copy all to device".

   b. Set the slave alias.

   Slave alias can be set through the DIP switch and software.

   - When the DIP switch is at non-zero position, the slave alias set by the DIP switch is used. Otherwise, the slave alias set by the software is used.
   - To set slave alias through the software, fill in the alias address in "Write Alias Address". Then, click "Assign Address" and "OK". Power on the slave again and scan the device.

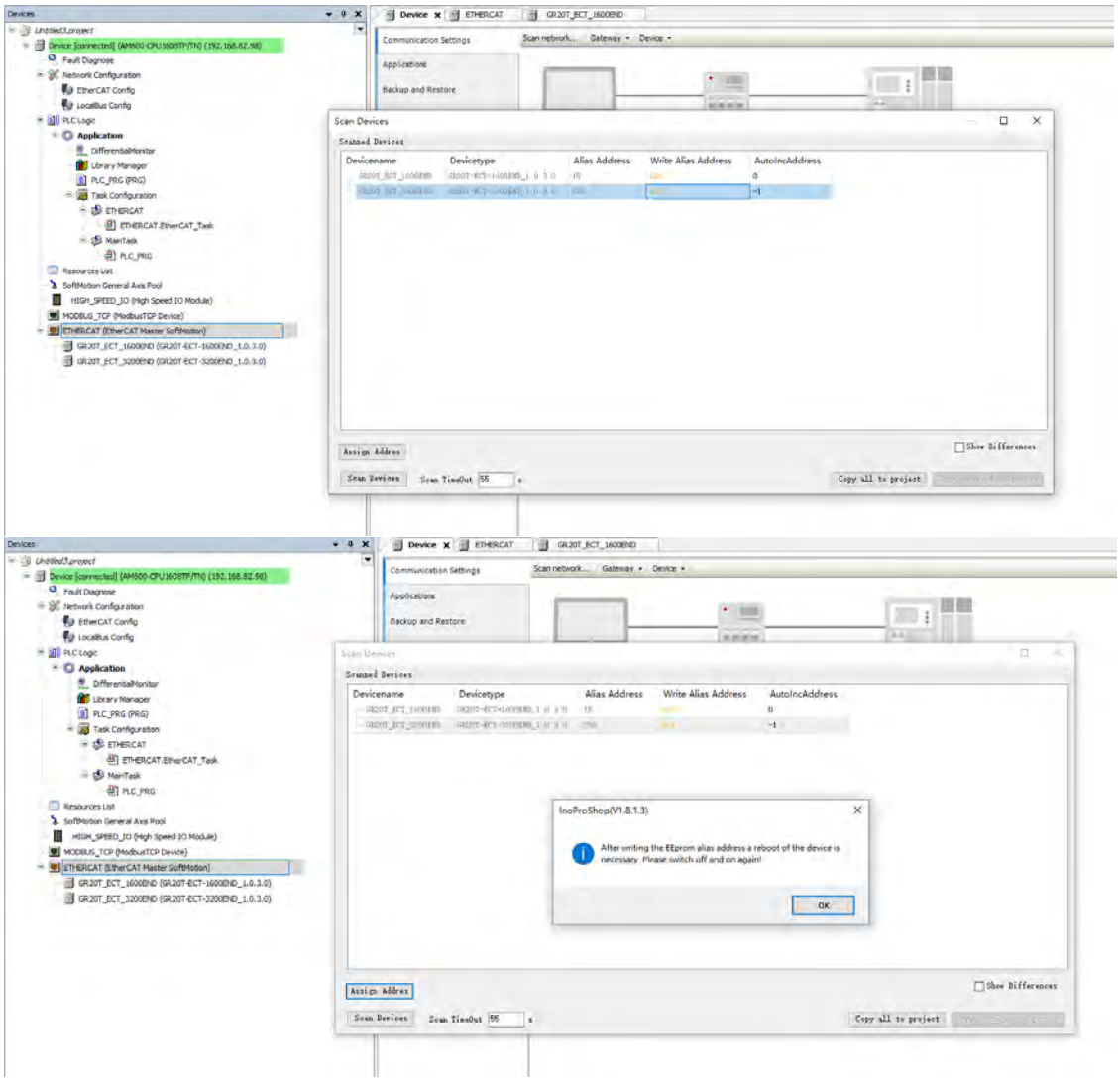

3. After the module is added successfully, the slave is configured in "Mixed mode" by default. To configure a slave in "Alias mode", double-click "ETHERCAT (EtherCAT Master SoftMotion)" in the "Devices" pane. Then, click "Overview" on the "ETHERCAT" tab to select the "Alias mode". Fill in the alias address for each slave and click in the toolbar, as shown in the following figure.

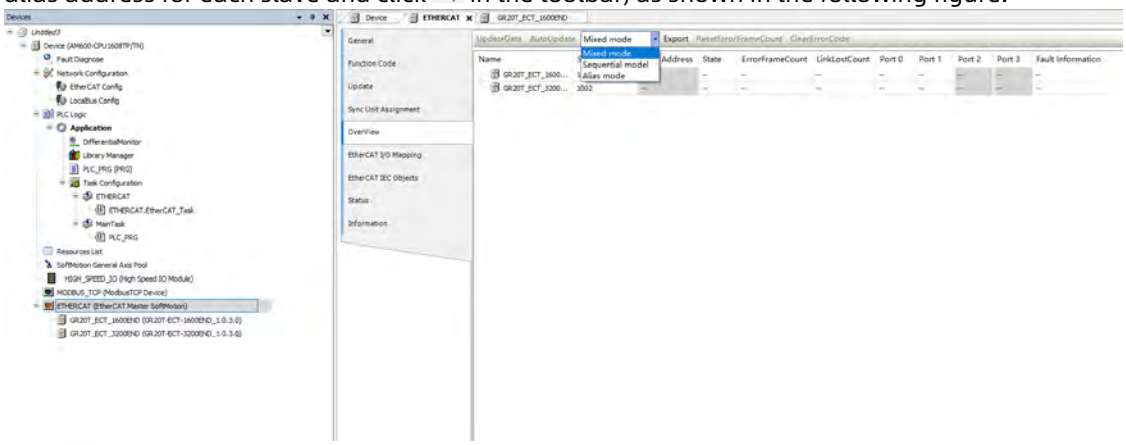

4. Click to start the module, as shown in the following figure.

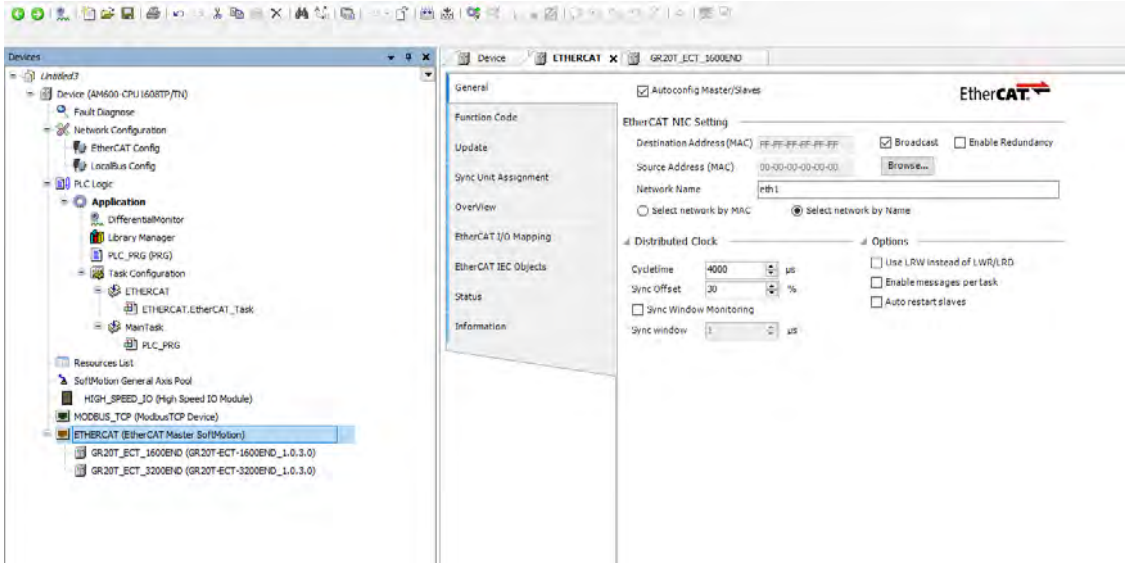

5. Double-click the EtherCAT slave that has been scanned and successfully added in the "Devices" pane. Then, click "EtherCAT I/O Mapping" on the GR20T-ECT-1600END tab to configure parameters and read the uploaded data of the module.
   The "DI input filter time" represents the input filter time of the DI channel and DIO channel, as shown in the following table.

Filter Time	Description	Filter Time	Description
0x0000	Retain	0x0010	The filter time is 2ms.
0x0001	No filter	0x0020	The filter time is 4ms.
0x0002	The filter time is 0.25ms.	0x0040	The filter time is 8ms.
0x0004	The filter time is 0.5ms.	0x0080	The filter time is 16ms.
0x0008	The filter time is 1ms.	0x0100	The filter time is 32ms.

The following table describes the upload parameters of the DI channel.

Parameter	Descriptions
DI Channel Input CH	Input signal value of the DI channel The 16 DI inputs to the GR20T-ECT-1600END module are controlled by Bit 0 to Bit 15 of the "DI Channel Input CH0". The first 16 DI inputs to the GR20T-ECT-3200END module are controlled by Bit 0 to Bit 15 of the "DI Channel Input CH0". The last 16 DI inputs are controlled by Bit 0 to Bit 15 of the "DI Channel Input CH1".

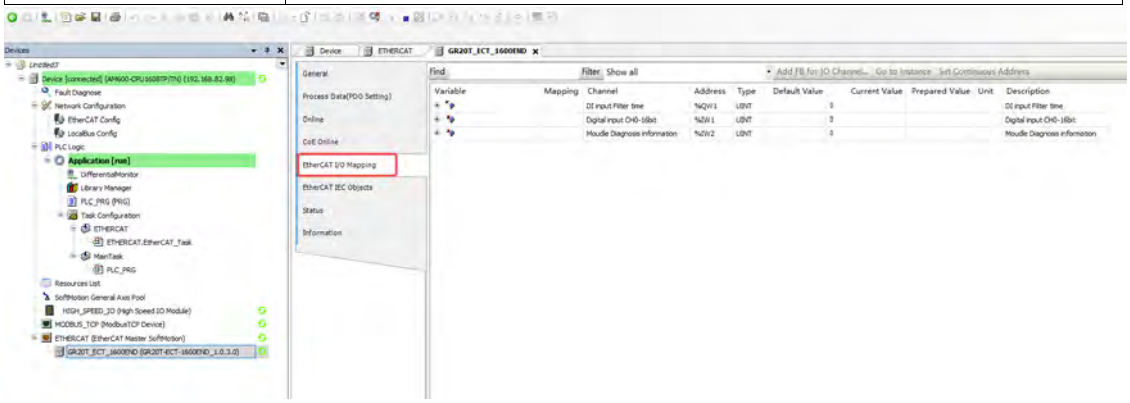

5 Troubleshooting

When the ERR indicator is ON, it indicates that the module is faulty. In this case, a fault code is reported and can be accessed through the "Module Diagnosis Information" in the "EtherCAT I/O Mapping" interface of the module, as shown in the following figure.

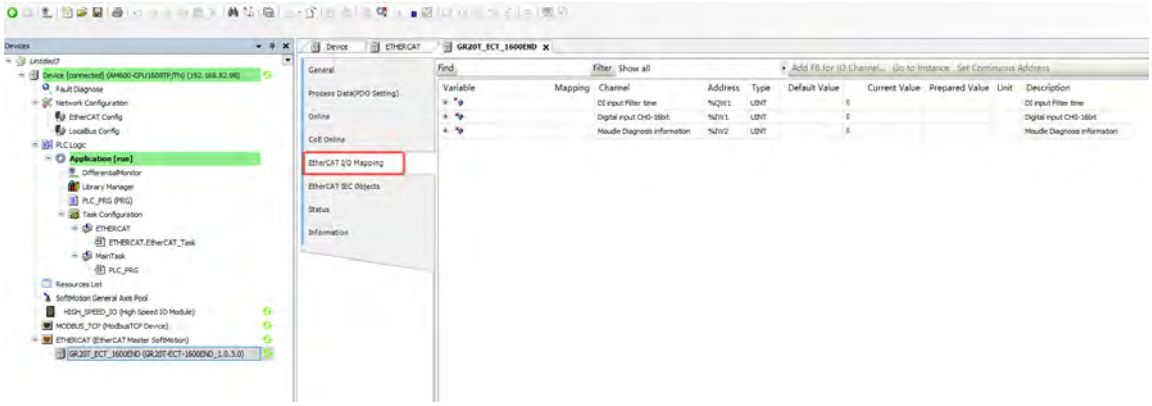

The following table describes the fault codes of the module.

Code	Description	Solution
0x0001	24 VDC power supply not connected	Check whether the 24 VDC power supply of the module is connected properly.

Copyright © Shenzhen Inovance Technology Co., Ltd.

PS00018141A00

Shenzhen Inovance Technology Co., Ltd.

www.inovance.com

Add.: Inovance Headquarters Tower, High-tech Industrial Park,
Guanlan Street, Longhua New District,
Shenzhen 518000, P.R. China

Tel: (0755) 2979 9595 Fax: (0755) 2961 9897

Suzhou Inovance Technology Co., Ltd.

www.inovance.com

Add.: No. 52, Tian E Dang Road, Wuzhong District, 215104,
Suzhou City, Jiangsu Province, P.R. China

Tel: (0512) 6637 6666 Fax: (0512) 6285 6720