INOVANCE

MD520 AC Drive

High performance universal AC drive

IE2 CE c UL us LISTED E467465 IND. CONT. EQ. STO SIL3

- Unified AC asynchronous and PM synchronous motor control
- Wide operating voltage and product range:
  - 3 ph 380-480 Vac: 0.4 to 500 kW
  - 3 ph 200-240 Vac: 0.4 to 75 kW
  - 1 ph 200-240 Vac: 0.4 to 2.2 kW
- STO SIL 3 PL e
- Built-in DC reactor (400 V: 18.5 kW and above; 200 V: 11 kW and above)
- Enhanced reliability: conformal coated PCBs compliant to 3S2 and 3C3 environments
- Complies to efficiency level IE2 as defined in IEC 61800-9-2
- Through-hole mounting options (0.4 to 160 kW)

INOVANCE

MD520 - features & functions

- Induction motor and PM synchronous motor control:
  - Open loop V/F (induction motors only) and SVC
  - Closed loop FVC
- Dual rated: heavy duty (overload: 150%/ 1 min) and normal duty (overload: 110%/ 1 min)
- Starting torque
  - 150% at 0.25 Hz for SVC
  - 180% at 0 Hz for FVC
- Communication options:
  - Modbus-RTU
  - Modbus-TCP
  - PROFIBUS-DP
  - CANopen
  - CANlink
  - PROFINET
  - EtherCAT
  - Ethernet/IP
- Category C2 compliance with external RFI filter. Ratings with built-in filter comply with Category C3*1
- Simplified parameters for easy start up
- 4 independent S-ramps
- Flexible programmable I/Os
- User programmable functions
- Variable DC-injection braking
- Comprehensive trip diagnostics
- Output frequency: 599 Hz
- Built-in dynamic braking unit
- Bipolar analog input as standard (-10 to +10 V)
- PTC input as standard
- Application dedicated functions:
  - Master-slave function (torque, speed)
  - Textile wobble control
- Brake control logic
- 4 motor parameter sets
- Automatic torque boost
- PC-based software: simplified start up & backup*2

*1 For detailed EMC compliance information, consult your local Inovance representative
*2 USB to RS485 adapter required. MDKE-10 or SOP-20 keypads can be used for this purpose

NEW: built-in colour LED keypad

- The clearest possible information display
- Displays multiple pieces of information simultaneously (e.g. drive status and operating information)
- User friendly with additional keys

General specifications

Heavy duty ratings, 150% overload

	Voltage class CE UL	Three phase 380 to 480 Vac										
	Drive model: MD520-4TxxxB(S)-INT	0.4B(S)	0.7B(S)	1.1B(S)	1.5B(S)	2.2B(S)	3.0B(S)	3.7B(S)	5.5B(S)	7.5B(S)	11B(S)	15B(S)
	Frame size	T1*1						T2		T3		T4
Drive input	Rated input voltage	Three phase 380 to 480 Vac -15% to +10%										
Drive input	Rated input current [A]	1.8	2.4	3.7	4.6	6.3	9.0	11.4	16.7	21.9	32.2	41.3
Drive input	Power capacity [kVA]	2	2.8	4.1	5.0	6.7	9.5	12	17.5	22.8	33.4	42.8
Drive input	Rated input frequency	50/60 Hz ±5%										
Drive output	Applicable motor [kW]	0.4	0.75	1.1	1.5	2.2	3.0	3.7	5.5	7.5	11	15
Drive output	Output current [A]*2	1.5	2.1	3.1	3.8	5.1	7.2	9.0	13.0	17.0	25.0	32.0
Drive output	Default carrier frequency [kHz]	6	6	6	6	6	6	6	6	6	6	6
Drive output	Overload capacity	150% for 60 s										
Drive output	Max. output voltage	Three phase 380 to 480 Vac (proportional to input voltage)										
Drive output	Max. output frequency	599 Hz										
Braking resistor	Recommended power [kW]	0.08	0.14	0.22	0.3	0.44	0.6	0.74	1.1	1.5	2.2	3
Braking resistor	Minimum resistance [Ω]	96	96	96	96	64	64	32	32	32	24	24
	Braking unit	Built-in										
	Enclosure	IP 20										

Normal duty ratings, 110% overload

	Voltage class CE UL	Three phase 380 to 480 Vac										
	Drive model: MD520-4TxxxB(S)-INT	0.4B(S)	0.7B(S)	1.1B(S)	1.5B(S)	2.2B(S)	3.0B(S)	3.7B(S)	5.5B(S)	7.5B(S)	11B(S)	15B(S)
	Frame size	T1*1						T2		T3		T4
Drive input	Rated input voltage	Three phase 380 to 480 Vac -15% to +10%										
Drive input	Rated input current [A]	2.5	3.7	4.6	6.4	9.1	11.3	15.9	22.4	32.9	39.7	44.0
Drive input	Power capacity [kVA]	2.3	3.4	4.2	5.9	8.3	10.4	15.5	20.5	30.2	38.2	44.4
Drive input	Rated input frequency	50/60 Hz ±5%										
Drive output	Applicable motor [kW]	0.75	1.1	1.5	2.2	3.0	3.7	5.5	7.5	11	15	18.5
Drive output	Output current [A]*2	2.1	3.1	3.8	5.1	7.2	9.0	13.0	17.0	25.0	32.0	37.0
Drive output	Default carrier frequency [kHz]	6	6	6	6	6	6	6	6	6	6	6
Drive output	Overload capacity	110% for 60 s										
Drive output	Max. output voltage	Three phase 380 to 480 Vac (proportional to input voltage)										
Drive output	Max. output frequency	599 Hz										
Braking resistor	Recommended power [kW]	0.08	0.14	0.22	0.3	0.44	0.6	0.74	1.1	1.5	2.2	3
Braking resistor	Minimum resistance [Ω]	96	96	96	96	64	64	32	32	32	24	24
	Braking unit	Built-in										
	Enclosure	IP 20										

*1 0.75/1.5/2.2 kW are the preferred stocking ratings. To learn more, please get in touch with your local Inovance representative.
*2 Rated output current at default carrier frequency.

General specifications

Heavy duty ratings, 150% overload

	Voltage class CE UL	Three phase 380 to 480 Vac										
	Drive model: MD520-4Txxx(B)(S)(-T)-INT	18.5 (B)(S)(-T)	22 (B)(S)(-T)	30(B)(S)	37(B)(S)	45(B)(S)	55(B)(S)	75(B)(S)	90(S)	110(S)	132(S)	160(S)
	Frame size	T5		T6		T7		T8			T9	
Drive input	Rated input voltage	Three phase 380 to 480 Vac -15% to +10%										
Drive input	Rated input current [A]	43.4	51.3	57	69	89	106	139	164	196	240	287
Drive input	Power capacity [kVA]	45	54	52	63	81	97	127	150	179	220	263
Drive input	Rated input frequency	50/60 Hz ±5%										
Drive output	Applicable motor [kW]	18.5	22	30	37	45	55	75	90	110	132	160
Drive output	Output current [A]*2	37	45	60	75	91	112	150	176	210	253	304
Drive output	Default carrier frequency [kHz]	6	6	6	5	5	4	3	3	3	3	3
Drive output	Overload capacity	150% for 60 s										
Drive output	Max. output voltage	Three phase 380 to 480 Vac (proportional to input voltage)										
Drive output	Max. output frequency	599 Hz										
Braking resistor	Recommended power [kW]	4.5	4.5	6	7	9	11	15	18	22	26	32
Braking resistor	Minimum resistance [Ω]	24	24	19.2	14.8	12.8	9.6	6.8	11.4x2*3	7.7 x2*3	7.7 x2*3	2.8 x2*3
	Braking unit	Built-in							MDBUN-60-5T x2	MDBUN-90-5T x2		MDBUN-200-5T x2
	Enclosure	IP 20										

Normal duty ratings, 110% overload

	Voltage class CE UL	Three phase 380 to 480 Vac										
	Drive model: MD520-4Txxx(B)(S)(-T)	18.5 (B)(S)(-T)	22 (B)(S)(-T)	30(B)(S)	37(B)(S)	45(B)(S)	55(B)(S)	75(B)(S)	90(S)	110(S)	132(S)	160(S)
	Frame size	T5		T6		T7		T8			T9	
Drive input	Rated input voltage	Three phase 380 to 480 Vac -15% to +10%										
Drive input	Rated input current [A]	51.3	65.8	71	86	111	143	167	198	239	295	359
Drive input	Power capacity [kVA]	54	60	65	79	102	131	153	181	219	270	328
Drive input	Rated input frequency	50/60 Hz ±5%										
Drive output	Applicable motor [kW]	22	30	37	45	55	75	90	110	132	160	200
Drive output	Output current [A]*2	45	60	75	91	112	150	176	210	253	304	377
Drive output	Default carrier frequency [kHz]	6	6	6	5	5	4	3	3	3	3	3
Drive output	Overload capacity	110% for 60 s										
Drive output	Max. output voltage	Three phase 380 to 480 Vac (proportional to input voltage)										
Drive output	Max. output frequency	599 Hz										
Braking resistor	Recommended power [kW]	4.5	4.5	6	7	9	11	15	18	22	26	32
Braking resistor	Minimum resistance [Ω]	24	24	19.2	14.8	12.8	9.6	6.8	11.4 x2*3	7.7 x2*3	7.7 x2*3	2.8 x2*3
	Braking unit	Built-in							MDBUN-60-5T x2	MDBUN-90-5T x2		MDBUN-200-5T x2
	Enclosure	IP 20										

*2 Rated output current at default carrier frequency.
*3 Minimum value of the resistance for each braking unit.

General specifications

Heavy duty ratings, 150% overload

	Voltage class CE UL	Three phase 380 to 480 Vac						
	Drive model: MD520-4Txxx(S)-INT*4	200(S)	220(S)	250(S)	280(S)	315(S)	355(S)	400(S)
	Frame size	T10		T11		T12		
Drive input	Rated input voltage	Three phase 380 to 480 Vac -15% to +10%						
Drive input	Rated input current [A]	365	410	441	495	565	617	687
Drive input	Power capacity [kVA]	334	375	404	453	517	565	629
Drive input	Rated input frequency	50/60 Hz ±5%						
Drive output	Applicable motor [kW]	200	220	250	280	315	355	400
Drive output	Output current [A]*2	377	426	465	520	585	650	725
Drive output	Default carrier frequency [kHz]	3	3	3	3	3	3	3
Drive output	Overload capacity	150% for 60 s						
Drive output	Max. output voltage	Three phase 380 to 480 Vac (proportional to input voltage)						
Drive output	Max. output frequency	599 Hz						
Braking resistor	Recommended power [kW]	42	54	60	69	78	87	87
Braking resistor	Minimum resistance [Ω]	2.8 x2*3	2.8 x2*3	2.8 x3*3	2.8 x3*3	2.8 x3*3	2.8 x3*3	2.8 x3*3
	Braking unit	MDBUN-200-5T x2		MDBUN-200-5T x3				
	Enclosure	IP 00						

Normal duty ratings, 110% overload

	Voltage class CE UL	Three phase 380 to 480 Vac						
	Drive model: MD520-4Txxx(S)-INT*4	200(S)	220(S)	250(S)	280(S)	315(S)	355(S)	400(S)
	Frame size	T10		T11		T12		
Drive input	Rated input voltage	Three phase 380 to 480 Vac -15% to +10%						
Drive input	Rated input current [A]	456	507	559	624	708	782	840
Drive input	Power capacity [kVA]	417	464	511	571	647	715	768
Drive input	Rated input frequency	50/60 Hz ±5%						
Drive output	Applicable motor [kW]	250	280	315	355	400	450	500
Drive output	Output current [A]*2	465	520	585	650	725	820	880
Drive output	Default carrier frequency [kHz]	3	3	3	3	3	3	3
Drive output	Overload capacity	110% for 60 s						
Drive output	Max. output voltage	Three phase 380 to 480 Vac (proportional to input voltage)						
Drive output	Max. output frequency	599 Hz						
Braking resistor	Recommended power [kW]	42	54	60	69	78	87	87
Braking resistor	Minimum resistance [Ω]	2.8 x2*3	2.8 x2*3	2.8 x3*3	2.8 x3*3	2.8 x3*3	2.8 x3*3	2.8 x3*3
	Braking unit	MDBUN-200-5T x2		MDBUN-200-5T x3				
	Enclosure	IP 00						

*2 Rated output current at default carrier frequency.
*3 Minimum value of the resistance for each braking unit.
*4 For the standard AC drive, we recommend motor cable lengths to be <100 m. Where your installation exceeds 100 m, the "L" version is an option with a built-in AC output reactor (1% voltage drop) which can help to overcome the effects of long cable installations. To discuss your application, contact your local Inovance representative.

General specifications

Heavy duty ratings, 150% overload

	Voltage class CE UL	Three phase 200 - 240 Vac															
	Drive model: MD520-2Txxx(B)(S)-INT	0.4 B(S)	0.7 B(S)	1.1 B(S)	1.5 B(S)	2.2 B(S)	3.7 B(S)	5.5 B(S)	7.5 B(S)	11 B(S)	15 B(S)	18.5 B(S)	22 B(S)	30 B(S)	37 B(S)	45(S)	55(S)
	Frame size	T1				T2		T3	T4	T5	T6		T7		T8		
Drive input	Rated input voltage	Three phase 200 to 240 Vac -15% to +10%															
Drive input	Rated input current [A]	2.4	4.6	6.3	9.0	11.4	16.7	32.2	41.3	51.3	57	69	89	106	139	164	196
Drive input	Power capacity [kVA]	1.1	2.1	2.9	4.1	5.2	7.6	14.7	18.9	27	26.1	31.6	40.7	48.5	63.6	75	89.6
Drive input	Rated input frequency	50/60 Hz ±5%															
Drive output	Applicable motor [kW]	0.4	0.75	1.1	1.5	2.2	3.7	5.5	7.5	11	15	18.5	22	30	37	45	55
Drive output	Output current [A]*2	2.1	3.8	5.1	7.2	9.0	13	25	32	45	60	75	91	112	150	176	210
Drive output	Default carrier frequency [kHz]	6	6	6	6	6	6	6	6	6	6	5	5	4	3	3	3
Drive output	Overload capacity	150% for 60 s															
Drive output	Max. output voltage	Three phase 200 to 240 Vac (proportional to input voltage)															
Drive output	Max. output frequency	599 Hz															
Braking resistor	Recommended power [kW]	0.09	0.16	0.25	0.34	0.5	0.8	1.3	1.7	2.3	3.0	3.9	4.6	5.5	6.8	5.0 x2	6.0 x2
Braking resistor	Minimum resistance [Ω]	48	48	32	32	16	16	12	12	12	9	7	6	5	4	5.5 x2*3	3.7 x2*3
	Braking unit	Built-in														MDBUN-60-2T x2	MDBUN-90-2T x2
	Enclosure	IP 20															

Normal duty ratings, 110% overload

	Voltage class CE UL	Three phase 200 - 240 Vac															
	Drive model: MD520-2Txxx(B)(S)-INT	0.4 B(S)	0.7 B(S)	1.1 B(S)	1.5 B(S)	2.2 B(S)	3.7 B(S)	5.5 B(S)	7.5 B(S)	11 B(S)	15 B(S)	18.5 B(S)	22 B(S)	30 B(S)	37 B(S)	45(S)	55(S)
	Frame size	T1				T2		T3	T4	T5	T6		T7		T8		
Drive input	Rated input voltage	Three phase 200 to 240 Vac -15% to +10%															
Drive input	Rated input current [A]	3.7	6.4	9.1	11.3	15.9	22.4	39.7	44	65.8	71	86	111	143	167	198	239
Drive input	Power capacity [kVA]	1.7	2.9	4.2	5.2	7.3	10.2	18.2	20.1	30.1	32.5	39.3	50.8	65.4	76.4	90.5	109.3
Drive input	Rated input frequency	50/60 Hz ±5%															
Drive output	Applicable motor [kW]	0.75	1.1	1.5	2.2	3.7	5.5	7.5	11	15	18.5	22	30	37	45	55	75
Drive output	Output current [A]*2	3.1	5.1	7.2	9.0	13	17	32	37	60	75	91	112	150	176	210	253
Drive output	Default carrier frequency [kHz]	6	6	6	6	6	6	6	6	6	6	5	5	4	3	3	3
Drive output	Overload capacity	110% for 60 s															
Drive output	Max. output voltage	Three phase 200 to 240 Vac (proportional to input voltage)															
Drive output	Max. output frequency	599 Hz															
Braking resistor	Recommended power [kW]	0.09	0.16	0.25	0.34	0.5	0.8	1.3	1.7	2.3	3.0	3.9	4.6	5.5	6.8	5.0 x2	6.0 x2
Braking resistor	Minimum resistance [Ω]	48	48	32	32	16	16	12	12	12	9	7	6	5	4	5.5 x2*3	3.7 x2*3
	Braking unit	Built-in														MDBUN-60-2T x2	MDBUN-90-2T x2
	Enclosure	IP 20															

*2 Rated output current at default carrier frequency.
*3 Minimum value of the resistance for each braking unit.

INOVANCE

General specifications

Heavy duty ratings , 150% overload

	Voltage class CE UL	One phase 200 - 240 Vac			
Drive model: MD520-2SxxxB(S)-INT		0.4B(S)	0.7B(S)	1.5B(S)	2.2B(S)
	Frame size	T2			
Drive input	Rated input voltage	One phase 200 to 240 Vac -15% to +10%			
	Rated input current [A]	5.4	8.2	14	20
	Power capacity [kVA]	1.4	2.2	3.7	6
	Rated input frequency	50/60 Hz ±5%			
Drive output	Applicable motor [kW]	0.4	0.75	1.5	2.2
	Output current [A]*2	2.3	4.0	7.0	9.6
	Default carrier frequency [kHz]	6	6	6	6
	Overload capacity	150% for 60 s			
	Max. output voltage	Three phase 200 to 240 Vac (proportional to input voltage)			
	Max. output frequency	599 Hz			
Braking resistor	Recommended power [kW]	0.08	0.08	0.1	0.1
	Minimum resistance [Ω]	64	64	32	32
	Braking unit	Built-in			
	Enclosure	IP 20			

*2 Rated output current at default carrier frequency.

General wiring diagram

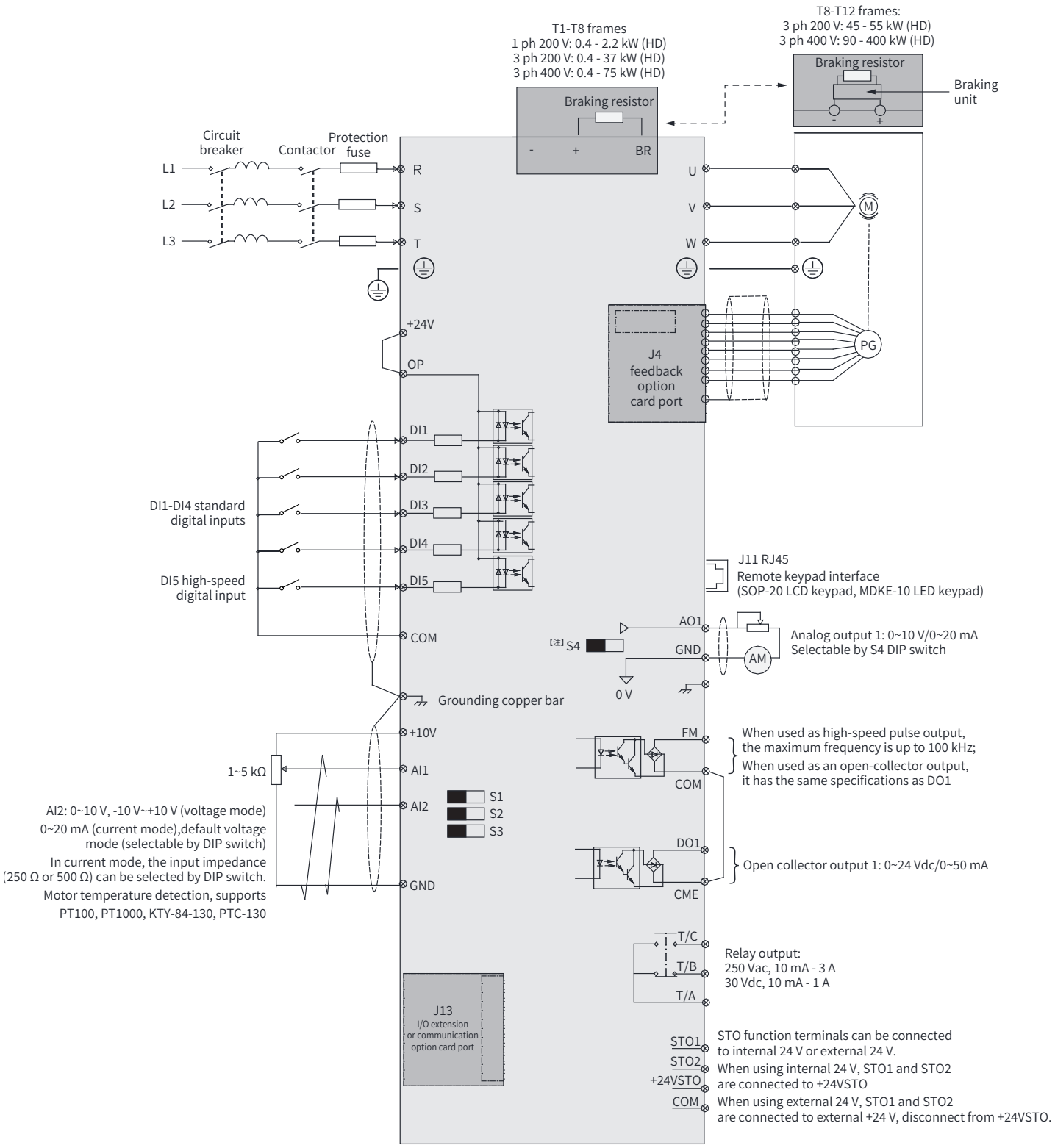

Dimensions

MD520-4T0.4B(S)-INT to MD520-4T15B(S)-INT
MD520-2T0.4B(S)-INT to MD520-2T7.5B(S)-INT
MD520-2S0.4B(S)-INT to MD520-2S2.2B(S)-INT

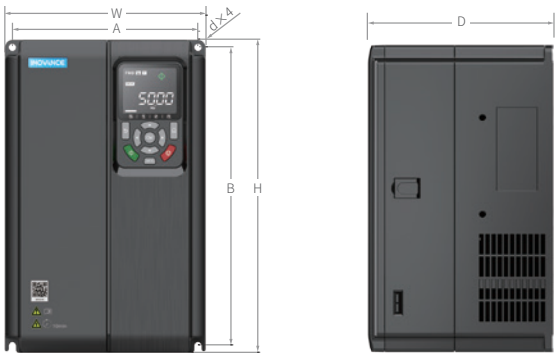

MD520-4T18.5B(S)-INT to MD520-4T37B(S)-INT
MD520-2T11B(S)-INT to MD520-2T18.5B(S)-INT

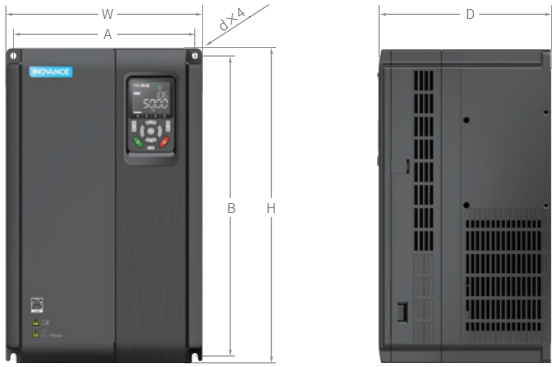

MD520-4T45B(S)-INT to MD520-4T160(S)-INT
MD520-2T22B(S)-INT to MD520-2T55(S)-INT

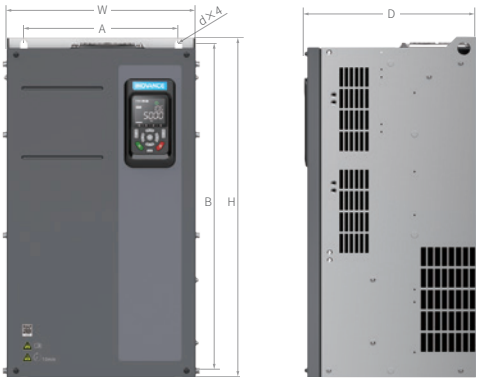

MD520-4T200(S)-INT to MD520-4T400(S)-INT

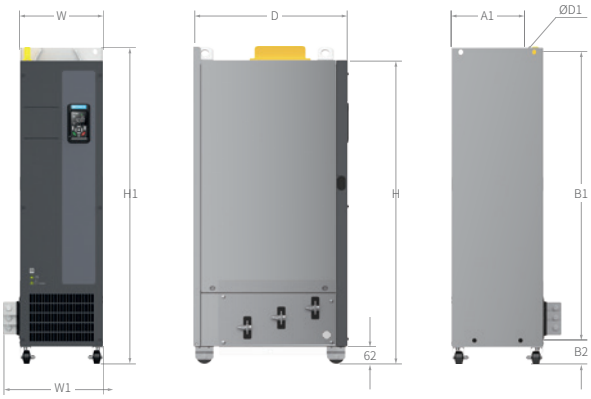

MD520-4T200(S)-L-INT to MD520-4T400(S)-L-INT

MD520 Model	Frame size	Dimensions (mm)										Mass (kg)
		A	A1	B	B1	H	H1	W	W1	D	D1	
MD520-4T0.4B(S)-INT, MD520-4T0.7B(S)-INT, MD520-4T1.1B(S)-INT MD520-4T1.5B(S)-INT, MD520-4T2.2B(S)-INT, MD520-4T3.0B(S)-INT, MD520-2T0.4B(S)-INT, MD520-2T0.7B(S)-INT MD520-2T1.1B(S)-INT, MD520-2T1.5B(S)-INT	T1	119	/	189	/	200	/	130	/	152	Ø5	1.6
MD520-4T3.7B(S)-INT, MD520-4T5.5B(S)-INT MD520-2S0.4B(S)-INT to MD520-2S2.2B(S)-INT MD520-2T2.2B(S)-INT, MD520-2T3.7B(S)-INT	T2	119	/	189	/	200	/	130	/	162	Ø5	2.0
MD520-4T7.5B(S)-INT, MD520-4T11B(S)-INT, MD520-2T5.5B(S)-INT	T3	128	/	238	/	250	/	140	/	170	Ø6	3.3
MD520-4T15B(S)-INT, MD520-2T7.5B(S)-INT	T4	166	/	266	/	280	/	180	/	170	Ø6	4.3
MD520-4T18.5B(S)-INT, MD520-4T22B(S)-INT, MD520-2T11B(S)-INT	T5	195	/	335	/	350	/	210	/	192	Ø6	10
MD520-4T30B(S)-INT, MD520-4T37B(S)-INT MD520-2T15B(S)-INT, MD520-2T18.5B(S)-INT	T6	230	/	380	/	400	/	250	/	220	Ø7	17.5
MD520-4T45B(S)-INT, MD520-4T55B(S)-INT MD520-2T22B(S)-INT, MD520-2T30B(S)-INT	T7	245	/	523	/	525	542	300	/	275	Ø10	35
MD520-4T75B(S)-INT, MD520-4T90(S)-INT, MD520-4T110(S)-INT MD520-2T37B(S)-INT, MD520-2T45(S)-INT, MD520-2T55(S)-INT	T8	270	/	560	/	554	580	338	/	315	Ø10	51.5
MD520-4T132(S)-INT, MD520-4T160(S)-INT	T9	320	/	890	/	874	915	400	/	320	Ø10	85
MD520-4T200(S)-INT MD520-4T220(S)-INT MD520-4T200(S)-L-INT MD520-4T220(S)-L-INT	T10	240 240	150 150	1,035 1,035	86 424	1,086 1,424	1,134 1,472	300 300	360 360	500 500	Ø13 Ø13	110 160
MD520-4T250(S)-INT, MD520-4T280(S)-INT MD520-4T250(S)-L-INT MD520-4T280(S)-L-INT	T11	225 225	185 185	1,175 1,175	97 435	1,248 1,586	1,284 1,622	330 330	390 390	545 545	Ø13 Ø13	155 215
MD520-4T315(S)-INT, MD520-4T355(S)-INT, MD520-4T400(S)-INT MD520-4T315(S)-L-INT, MD520-4T355(S)-L-INT MD520-4T400(S)-L-INT	T12	240 240	200 200	1,280 1,280	101 432	1,355 1,683	1,405 1,733	340 340	400 400	545 545	Ø16 Ø16	185 245

Option cards and mounting position

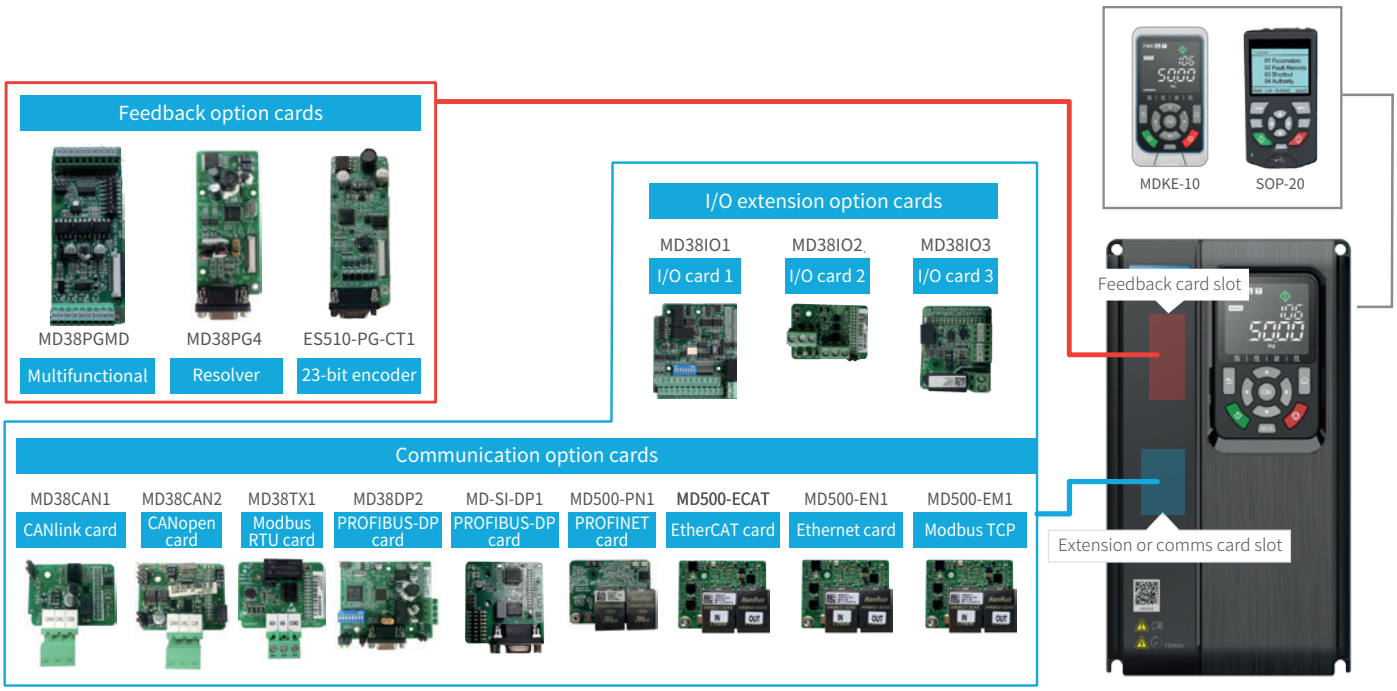

INOVANCE

PC software tools

InoDriverShop

InoDriverShop is Inovance's free of charge PC-based software offering. It is based on a familiar Windows interface. InoDriverShop can upload anddownload drive parameters, and features a variety of other functions, such as a real-time oscilloscope.
For the connection with the PC a standard USB to RS485 adapter can be used. MDKE-10 or SOP-20 keypads can also be used for this purpose.

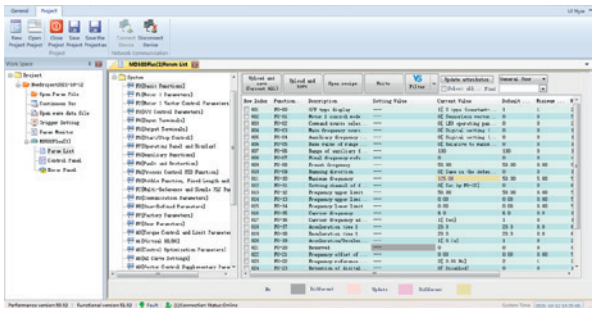

Parameter uploading/downloading

Multi channel oscilloscope

Accessories list

Category	Model	Function description	Suitable for
External braking units	MDBUN-60-5T	External braking unit, rated current 60 A, for supply input voltage 380 to 480 Vac AC drives.	T models: 90G
	MDBUN-90-5T	External braking unit, rated current 90 A, for supply input voltage 380 to 480 Vac AC drives.	T models: 110G - 132G
	MDBUN-200-5T	External braking unit, rated current 200 A, for supply input voltage 380 to 480 Vac AC drives.	T models: 160G - 450G
	MDBUN-60-2T	External braking unit, rated current 60 A, for supply input voltage 200 to 240 Vac AC drives.	2T models: 45G
	MDBUN-90-2T	External braking unit, rated current 90 A, for supply input voltage 200 to 240 VAC AC drives.	2T models: 55G
Keypads	MDKE-10	Remote LED keypad. Can be used as USB to RS485 adapter for the connection to the PC. Includes MDCAB cable.	All
	SOP-20	Remote multi-language LCD keypad. For parameter programming and monitoring, data copy. Keypad can be used as USB to RS485 adapter for the connection to the PC. Includes MDCAB cable.	All
	MDCAB	3 meter connection cable for remote keypad.	All
	MDCAB-1.5	1.5 meter connection cable for remote keypad.	All
	CP600-BASE1	Panel mounting base (only) for SOP-20 keypad. IP20 rating.	All
	SOP20-MP-IP20	Panel mounting base for SOP-20 keypad, including adapting metal plate and PCB protection plate. IP20 rating.	All
	SOP20-MP-IP54	Panel mounting base for SOP-20 keypad, including PCB protection plate and rubber seals. IP54 rating.	All
	MD580-AZJ1	Panel mounting base for MDKE-10. IP20 rating.	All
I/O extension cards	MD38IO1	I/O extension card 1, provides: 5x DI, 1x AI, 1x relay output, 1x DO, 1x AO, Modbus-RTU and CANlink.	Frame sizes T4-T12
	MD38IO2	I/O extension card 2, provides 3x extra DI terminals.	All
	MD38IO3	I/O extension card 3, provides 3x DI, 1x relay output, Modbus-RTU interface.	All
Fieldbus cards	MD500-ECAT	EtherCAT option card.	All
	MD500-EN1	Ethernet option card.	All
	MD38CAN1	CANlink option card, supports only CANlink.	All
	MD38CAN2	CANopen option card, supports only CANopen.	All
	MD38TX1	Modbus-RTU option card.	All
	MD38DP2	PROFIBUS-DP option card.	Frame sizes T4-T12
	MD500-EM1	Modbus TCP option card.	All
	MD-SI-DP1	PROFIBUS-DP option card (designed for smaller frames).	All
	MD500-PN1	PROFINET option card.	All
PG cards	MD38PG4	Option card for resolver (10 kHz excitation) with DB9 connector.	All
	MD38PGMD	Multifunctional encoder option card, compatible with differential, open-collector and push-pull encoder types. Supports differential output and open-collector output.	All
	ES510-PG-CT1	23-bit encoder card.	All
Mounting brackets	MD500-AZJ-A1T1	Through hole mounting bracket for frame T1.	Frame size T1
	MD500-AZJ-A1T2	Through hole mounting bracket for frame T2.	Frame size T2
	MD500-AZJ-A1T3	Through hole mounting bracket for frame T3.	Frame size T3
	MD500-AZJ-A1T4	Through hole mounting bracket for frame T4.	Frame size T4
	MD500-AZJ-A1T5	Through hole mounting bracket for frame T5.	Frame size T5
	MD500-AZJ-A1T6	Through hole mounting bracket for frame T6.	Frame size T6
	MD500-AZJ-A1T7	Through hole mounting bracket for frame T7.	Frame size T7
	MD500-AZJ-A1T8	Through hole mounting bracket for frame T8.	Frame size T8
	MD500-AZJ-A1T9	Through hole mounting bracket for frame T9.	Frame size T9
Guide rails	MD500-AZJ-A3T10	Guide rails for inserting in/ extracting from the cabinet - frame sizes T10 to T12.	Frame sizes T10-T12

Driven by technology

AC drives

AC MultiDrives

MV drives

Single-Axis servos

Multi-Axis servos

EtherCAT

Robotics & motion controllers

PLCs & HMIs

CNC machine tool solutions

EtherCAT

Electric vehicle inverters

International Offices

Germany-Stuttgart
Tel: +49 (0) 7144 8990 | sales.de@inovance.eu

Italy-Milano
Tel: +39 (0) 2268 22318 | sales.it@inovance.eu

France-Bordeaux
Tel: +33 (0) 5594 01050 | sales.fr@inovance.eu

Turkey-Istanbul
Tel: +90 (216) 706 17 89 | info@inovance.eu

South Korea-Seoul
Tel: +82 (0) 10 7428 5732 | info@inovance.eu

India
Head Office Chennai | Tel: +91 (0) 44 4380 0201
Ahmedabad | Tel: +91 794003 4272
Mumbai | Tel: +91 22 4971 5883
New Delhi | Tel: +91 11 4165 4524
Sales Network
in Kolkata, Bengaluru, Pune, Coimbatore, Hyderabad, Vadodara, Jaipur
Email: info@inovance.ind.in

Hong Kong SAR
International Export Office
Tel: +852 2751 6080
info@inovance.eu

For other country distributors, contact the Hong Kong office.

Inovance Technology Companies
Shenzhen Inovance Technology Co. Ltd.
Suzhou Inovance Technology Co. Ltd.

INOVANCE
www.inovance.eu

Copyright 2022 © Inovance Technology Co., Ltd., All rights reserved. The information contained in this brochure is for guidance only.

Data code: 19120220 V0.0