19120286A00

Copyright ©Shenzhen Inovance Technology Co., Ltd.

20 Years' Innovation
for a Century of Automation

2003 - 2023

Shenzhen Inovance Technology Co., Ltd.

www.inovance.com

Add.: Inovance Headquarters Tower, High-tech Industrial Park,
Guanlan Street, Longhua New District, Shenzhen

Tel: (0755) 2979 9595 Fax: (0755) 2961 9897

Suzhou Inovance Technology Co., Ltd.

www.inovance.com

Add.: No. 16 Youxiang Road, Yuexi Town,
Wuzhong District, Suzhou 215104, P.R. China

Tel: (0512) 6637 6666 Fax: (0512) 6285 6720

INOVANCE

20 Years' Innovation for a Century of Automation
2003 - 2023

MD580 Series

High-Performance Engineering AC Drive

Industrial Automation | Intelligent Elevator | New Energy Vehicle | Industrial Robot | Rail Transit

FORWARD,ALWAYS PROGRESSING

20

20 Years' Innovation for a Century of Automation

2003/2023

67 nationwide offices

400 authorized distributors

1020 service centers

6 inventory centers

2500 sales and service staff

About us

Shenzhen Inovance Technology Co., Ltd. (stock code: SZ.300124) is founded in 2003 and has a current stock market value of about RMB 160 billion. Inovance is the key force in developing industrial automation and drive technologies in China and a provider of optical-mechatronics-hydraulic-pneumatic integrated solutions covering drive, control, motor, and precision machinearies.

Ionvance achieves an annual revenue of RMB 17.945 billion and an operating profit of RMB 3.573 billon in 2021, which grew by 56% and 70% respectively on yoy basis. Headquartered in Shenzhen, Inovance has established multiple production bases in Suzhou, Changzhou, Yueyang, and Nanjing, as well as subsidiaries, resident offices, and service centers in over 20 countries and regions worldwide. As of 2021, Inovance has obtained 2,186 patents and software copyrights. Through continuous investment in R&D, Inovance has enhanced its technical strength in such fields as motor and drive control, industrial control software, electric drive assembly for new energy vehicles, digitalization, and industrial robots.

Inovance is dedicated to the development of core technologies in motor drive and control, power electronics, and industrial Internet communication, with business covering industrial automation, elevator electrical assessories, new energy vehicles, industrial robots, and rail transit. Inovance aims to provide integrated solutions and industry-tailored products based on various industry needs, creating continuous values for customers.

The core technologies of Inovance not only covers the information layer, control layer, drive layer, execution layer, and perception layer, but also covers such fields as industrial automation, elevator, new energy vehicle, and trail transit, including:

① high performance vector control technology, servo control technology, and high-power IGCT drive technology in the drive layer;

② small- to large-scale PLC technology, CNC control technology, robot control technology, and high-speed bus technology in the control layer;

③ high-performance servo motor technology, high-efficiency motor technology, high-speed motor and magnetic levitation bearing technology, high-precision encoder design and process technology, precision transmission machine design and process technology, and image recognition technology in the execution layer;

④ industrial Internet, edge computing, industrial AI technology in the information layer; and

⑤ process technologies in industries including new energy vehicle, elevator, air contioner, air compressor, 3C manufacturing, lithium battery, silicon, crane, injection molding machine, textile, metal product, printing, and packaging.

Inovance has been listed into "CCTV Top 10 Socially Responsible Corporate in Top 50 Listed Companies in China" in 2017, "National Enterprise Technology Center" in 2021, "First Batch of Postdoctoral Workstation in Shenzhen", "Top 100 Innovative Enterprise In Jiangsu", "First Batch of Key R&D Projects in Intelligent Robot in China", and "New Energy Vehicle Power Assembly Engineering Center in Jiangsu".

(By end of 2022)

MD580

New Generation High-Performance Engineering AC Drive

Applicable industries: Metallurgy, non-ferrous metal, building material, paper making, chemical engineering, municipal engineering, vehicle equipment, and stage machinery

Multiple certifications

CE certified

Authoritative type test report

Stable and reliable

Conformal coating to meet 3C3 and 3S3 requirements

Built-in dual DC reactors as standard for 690 V models

Data reconfiguration

Supports programming through connectors

Easy to use

Independent 24 V for commissioning

Operating panel for parameter copy and download

Type-C port provided

Powerful functions

Supports 300-meter cable between the drive and motor

Drive of asynchronous/synchronous motors

Motor temperature detection

Five communication buses available

Safety

Meets TUV SIL3 certifications

Fault monitoring by the black box

Industrial AC Drive Portfolio

MD480

General engineering AC drive

Power range: 0.4-630 kW

MD580

High-performance engineering AC drive

Power range: 0.75-450 kW, three-phase 380-480 VAC
5.5-250 kW, three-phase 525-690 VAC

MD880

Engineering AC drive (multidrive system)

Power range: 3.7-5600 kW

MD580 High-Performance Engineering AC drive

MD580 high-performance engineering AC drive

Power: 0.75-450 kW, three-phase 380-480 VAC
5.5-250 kW, three-phase 525-690 VAC

Easy to use

- Programming through connectors
- Fault storage in the black box
- External 24 V for commissioning
- Multiple communication buses available
- Parameter copy through operating panel

Powerful function

- Supports 300-meter cable between the drive and motor
- Seven communication buses to implement PROFINET ring network topology
- Drive algorithm of synchronous and asynchronous motor
- Three-channel sampling of motor temperature

Reliable hardware

- CE certified
- STO to provide SIL3 protection
- Type test report passing the third-party authoritative certification
- Sheet metal design covering all series to meet environmental requirements of 3C3 and 3S3

MD580 Highlights

01. Easy to Use

Control board

- Independent 24 V for communication and control circuits
- Built in STO to confirm with SIL3
- 6 DIs + 1 HDI, PNP or NPN available
- RS-485 and CAN communication (master/slave)
- Two communication protocols supported to meet requirements of PLC/DCS systems
- Communication expansion card
- 1 HDO, PNP or NPN available
- Three-channel sampling of motor temperature ; supports PT100, PT1000, PTC, and KTY
- 2 AIs + 2 AOs, 0-10 V or 0-20 mA
- Encoder PG card
- Three delay outputs; programmable NO/NC contacts

Commissioning panel and software

Improved operating panel

Screen enlarged by 120% to display more information

Improved silicone button to fit your hand for commissioning

TYPE-C port for convenient use

Commissioning wizard for beginners

Operating panel

Parameter display by group
Customized **quick** commissioning

Parameter copy and import **with one key**

Several languages switchover and screen brightness adjustment at your will

02. Data reconfiguration

Data reconfiguration by connector

With the connector, customized requirements can be met without changing the software.

- Configuration of data in the controlled module and resource pool (virtual B connector), including the control word, input terminal status of the expansion card, input terminal status of the control board, driver status word, and driver running status data
- Modular software configuration (virtual K connector) of data in the resource pool, including the software variable, bus process data, speed channel, torque channel, and ramp function generator

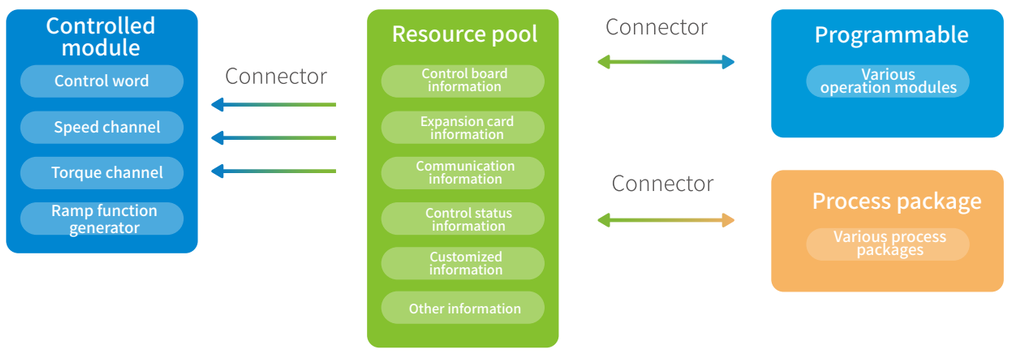

03. Powerful Functions

Drive algorithm of synchronous and asynchronous motors

Supports both synchronous motors and asynchronous motors.
Supports three-channel temperature sampling by PTC, KTY, PT100, and PT1000.

Motor Type	Supported Algorithm
Synchronous motor	SVC, FVC
Asynchronous motor	V/f, SVC, FVC

Type	Model	Function
PG card	MD38PG4	Applicable to the resolver; excitation frequency: 10 kHz; DB9 interface
	MD38PGMD	The card supports differential input, collector input, push-pull input, as well as differential output and collector output; therefore, it can be used to connect to different encoders and supports A/B phase input of the host controller.
	MD580-PG-AS1	Supports sin-cos and SSI encoders; full closed-loop
	MD580-PG-AU1	Supports ABZ (TTL level) and SSI encoders; full closed-loop

Performance

Item	Specification
Speed regulation range	1:50 (V/f control for asynchronous motors)
	1:200 (SVC for asynchronous motors)
	1:1000 (FVC for asynchronous motors)
Speed control accuracy	±1.0% (V/f control)
	±0.5% (SVC)
	±0.02% (FVC)
Speed fluctuation	0.5% (SVC)
	± 0.2% (FVC)
Torque response	< 20 ms (SVC)
	< 5 ms (FVC)

Fault monitoring by the black box

With the black box, you can analyze the fault immediately without waiting for reoccurrence of the fault.

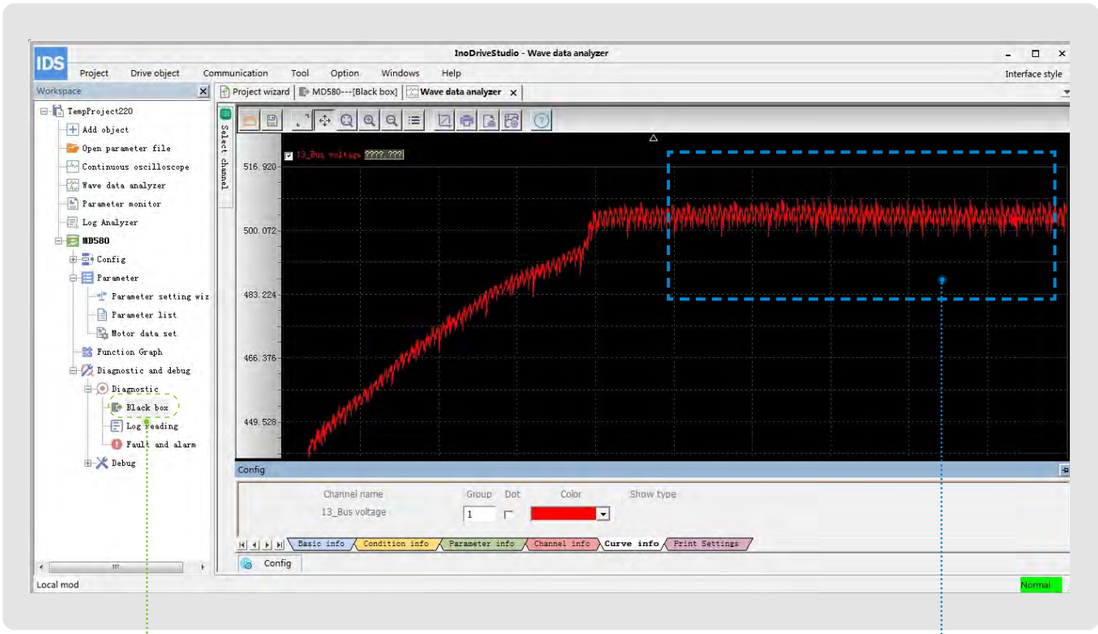

- Wave data within 50 specified periods
- Collection of 8 pieces of carrier periodic data
- Storage of the newest 80 groups of data by overwriting the old ones

- Collection of 4 pieces of internal data every 0.5 ms
- Collection of 48 pieces of internal data every 2 ms
- Collection of 16 pieces of customized data every 2 ms
- Collection of 5 pieces of internal data every 16 ms

Fault level selection

Eleven fault levels and all fault types can be selected.

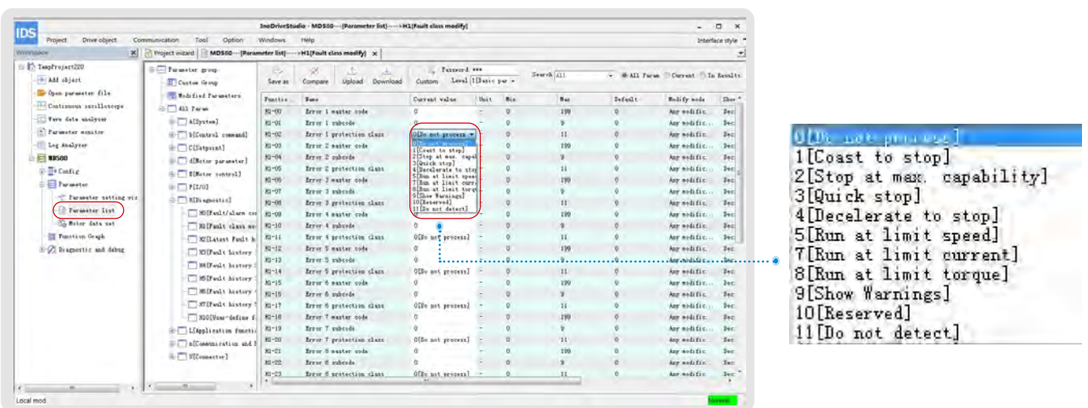

Supported buses

- Modbus TCP bus
- Modbus RTU bus
- CANopen bus
- PROFIBUS DP bus
- PROFINET bus
- EtherNet/IP bus
- EtherCAT bus

Type	Model	Description
Communication card	MD580-SI-EM1	Modbus TCP communication card
	MD580-SI-RS1	Modbus RTU communication card
	MD580-SI-CAN1	CANopen communication card
	MD580-SI-DP1	PROFIBUS DP communication card
	MD580-SI-PN1	PROFINET communication card
	MD580-SI-EN1	EtherNet/IP communication card
	MD580-SI-ECAT1	EtherCAT communication card

04. Stable and Reliable

Hardware upgrade

Sheet metal structure covering all series

Brand new look

Anti-harmonic interference

Independent air duct of the power module heatsink to reduce pollution to electronic devices

Meeting various electromagnetic environment requirements

Standard built-in DC reactor, which improves power factors and reduces harmonic distortion

Built-in C3 filter as standard, and external C2 filter as optional, meeting EU EN 61800-3 requirements

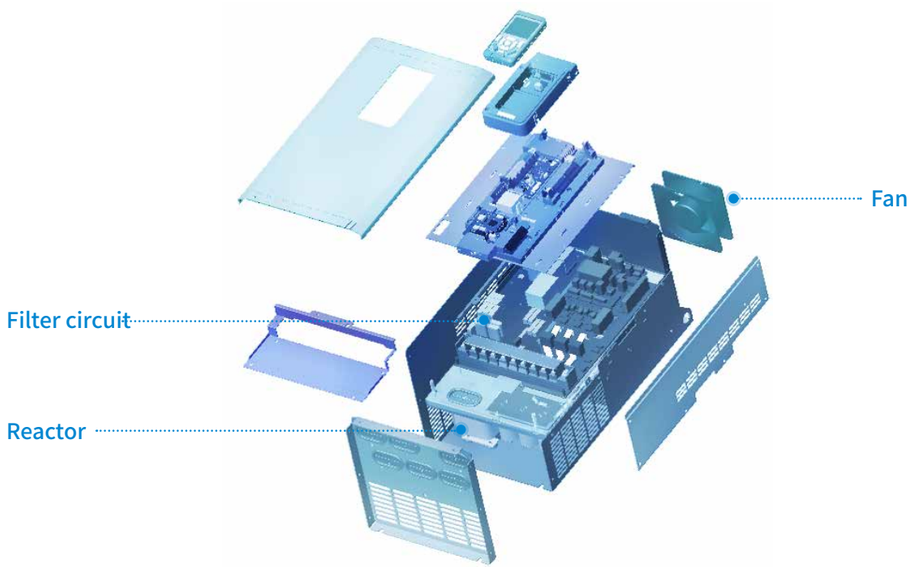

Operation in harsh conditions

- Conformal coating
- Meets the environmental requirements of IEC 60721-3-3 standard 3C3 (chemical gas)
- Meets the environmental requirements of IEC 60721-3-3 standard 3S3 (solid particles)
- Modular design to facilitate quick replacement of faulty components on the site

05. Safety

Advanced safety function

Built-in STO confirms with the following:

- EN/IEC61800-5-2
- IEC 61508 ed2:SIL 3
- EN/IEC62061:SIL CL3
- EN ISO 13849-1:PL e

Certified by TÜV SÜD

Simplified safety circuit

- Saves space and cables.
- Removes components that easily wear out such as contactors.
- Keeps the power on after the emergency stop to ensure quick production recovery.

MD580 engineering AC drive

(single-drive system)—applicable industries

Metallurgy

Non-ferrous metal

Electric power

Rubber

Chemical engineering

Cement

Paper making

Municipal engineering

MD580- Naming Rules

MD580 - 4T 75 B - L

Code	Product Name
MD580	AC drive series

Code	Power Rating (kW)
4T	Three-phase 380-480 V

Code	Output Current (A)
2R1	2.1
...	...
820	820

Code	Output AC Reactor
Null	Without output AC reactor
-L	With output AC reactor Applicable to T10 to T12 models

Code	Braking Unit
Null	Without braking unit
B	With braking unit

MD580 - 01S - 0271 - 7 - B - LCD

Code	Product Name
MD580	AC drive series

Code	Product Series
01S	AC drive (single-drive system)

Code	Output Current
07A4	7.4 A
09A9	9.9 A
...	...
0271	271 A

Code	Voltage Rating
7	690

Code	Standard Option
B	With braking unit
Null	Without braking unit

Code	Standard Option
LCD	LCD operating panel
Null	LED operating panel

MD580 (400 V/690 V Models) - Option List

Name		Order Number	Option Model	Supported AC Drive Model	Function
Braking component	Built-in braking unit	/	Model with "B"	0.7 kW to 90 kW models	Standard for models below 22 kW and optional for 22 kW models and above
	External braking unit	01013133	MDBUN-60-T	110 kW to 132 kW models	45 A, 380 VAC
		01013126	MDBUN-90-T	160 kW to 200 kW models	90 A, 380 VAC
		01040104	MDBUN-200-T	220 kW to 450 kW models	200 A, 380 VAC
Expansion card	Motor safety temperature detection card	01040258	MD580-HSMT-ATEX1	T1 to T3 models of the MD580 (400 V) All models of the MD580 (690 V)	Explosion-proof card
		01621338	HSMT-10	T4 to T12 models of the MD580 (400 V)	
	Sin-cos and SSI encoder card	01040256	MD580-PG-AS1	All models of the MD580 (400 V)	Supports sin-cos and SSI encoders; full closed-loop
	ABZ and SSI encoder card	01040254	MD580-PG-AU1		Supports ABZ (TTL level) and SSI encoders; full closed-loop
	Multi-functional I/O expansion card	01040255	MD580-IO-RD1		I/O expansion card, supporting four DIs, two ROs, two AIs, and two AOs
	EtherCAT communication card	01040259	MD580-SI-ECAT1		EtherCAT industrial Ethernet
	EtherNet/IP communication card	01040246	MD580-SI-EN1		EtherNet/IP industrial Ethernet
	CANopen communication card	01040188	MD580–SI-CAN1	Applicable to all models	CANopen bus adapter card
	MODBUS RTU communication card	01040189	MD580–SI-RS1		Modbus RTU bus adapter card
	PROFIBUS DP communication card	01040190	MD580–SI-DP1		PROFIBUS DP bus adapter card
	PROFINET IO communication card	01040191	MD580–SI-PN1		PROFINET IO industrial Ethernet card
	MODBUS TCP communication card	01040192	MD580–SI-EM1		Modbus TCP industrial Ethernet card
	Resolver interface card	01013081	MD38PG4		Applicable to the resolver; excitation frequency: 10 kHz; DB9 interface
	MD38PGMD multi-function encoder card	01013147	MD38PGMD		The encoder card supports differential input, collector input, push-pull input, as well as differential output and collector output; therefore, it can be used to connect to different encoders and supports A/B phase input of the host controller.
Cable	LED operating panel	01040182	MDKE-10		The external LED operating panel is connected to the AC drive through the RJ45 port.
	External LCD operating panel	01610168	SOP-20-880		The external LCD operationg panel is used for parameter copy and download.
	SOP-20-880 mounting base	01040022	CP600-BASE1		The SOP-20-880 can be installed to the cabinet door by using the mounting base.
	MDKE-10 mounting base	01040202	MD580-AZJ1		The MDKE-10 can be installed to the cabinet door by using the mounting base.
	Extension cable	01013008	MDCAB		The standard eight-conductor, three-meter cable can connect to the LED and LCD operating panel.
	Main circuit cable	/	Lugs manufactured by Suzhou Yuanli are recommended. For details of recommended lugs, see the product user guide.		It is recommended that the input and output main circuit cables, and power cables use symmetrical shielded cables. Compared with four-conductor cables, symmetrical shielded cables can reduce electromagnetic radiation in the whole transmission system.
	Control circuit cable	/	All control circuit cables must be shielded cables. Use a separate shielded cable for each type of analog signal, and use shielded twisted pair cables for digital signal.		

MD580 400 V Model Selection

Structure	Model	Light Duty			Heavy Duty			Option Selection	
		Rated Power (kW)	Rated Input Current (A)	Rated Output Current (A)	Rated Power (kW)	Rated Input Current (A)	Rated Output Current (A)	Optional AC Input Reactor	AC Output Reactor
T1	MD580-4T2R1B	0.7	2.5	2.1	0.4	1.8	1.5	MD-ACL-10-5-4T	MD-OCL-5-1.4-4T-1%
	MD580-4T3R1B	1.1	3.7	3.1	0.8	2.4	2.1	MD-ACL-10-5-4T	MD-OCL-5-1.4-4T-1%
	MD580-4T3R8B	1.5	4.6	3.8	1.1	3.7	3.1	MD-ACL-10-5-4T	MD-OCL-5-1.4-4T-1%
	MD580-4T5R1B	2.2	6.4	5.1	1.5	4.6	3.8	MD-ACL-10-5-4T	MD-OCL-7-1.0-4T-1%
	MD580-4T7R2B	3.0	9.1	7.2	2.2	6.3	5.1	MD-ACL-10-5-4T	MD-OCL-10-0.7-4T-1%
	MD580-4T9B	3.7	11.3	9.0	3.0	9.0	7.2	MD-ACL-15-3-4T	MD-OCL-10-0.7-4T-1%
T2	MD580-4T13B	5.5	15.9	13.0	3.7	11.4	9.0	MD-ACL-15-1.45-4T	MD-OCL-15-0.47-4T-1%
	MD580-4T17B	7.5	22.4	17.0	5.5	16.7	13.0	MD-ACL-15-1.45-4T	MD-OCL-20-0.35-4T-1%
T3	MD580-4T25B	11.0	32.9	25.0	7.5	21.9	17.0	MD-ACL-40-1.45-4T	MD-OCL-30-0.23-4T-1%
	MD580-4T32B	15.0	39.7	32.0	11.0	32.2	25.0	MD-ACL-40-1.45-4T	MD-OCL-40-0.18-4T-1%
T4	MD580-4T37B	18.5	48.6	37.0	15.0	41.3	32.0	MD-ACL-50-0.28-4T	MD-OCL-40-0.18-4T-1%
T5	MD580-4T45(B)	22.0	59.0	45.0	18.5	49.5	37.0	MD-ACL-60-0.24-4T-2%	MD-OCL-50-0.14-4T-1%
	MD580-4T60(B)	30.0	65.8	60.0	22.0	59.0	45.0	MD-ACL-80-0.17-4T-2%	MD-OCL-60-0.12-4T-1%
T6	MD580-4T75(B)	37.0	71.0	75.0	30.0	57.0	60.0	MD-ACL-80-0.17-4T-2%	MD-OCL-80-0.087-4T-1%
	MD580-4T91(B)	45.0	86.0	91.0	37.0	69.0	75.0	MD-ACL-90-0.16-4T-2%	MD-OCL-120-0.058-4T-1%
T7	MD580-4T112(B)	55.0	111.0	112.0	45.0	89.0	91.0	MD-ACL-120-0.12-4T-2%	MD-OCL-120-0.058-4T-1%
	MD580-4T150(B)	75.0	143.0	150.0	55.0	106.0	112.0	MD-ACL-150-0.095-4T-2%	MD-OCL-150-0.047-4T-1%
T8	MD580-4T176(B)	90.0	167.0	176.0	75.0	139.0	150.0	MD-ACL-200-0.07-4T-2%	MD-OCL-200-0.035-4T-1%
	MD580-4T210	110.0	198.0	210.0	90.0	164.0	176.0	MD-ACL-250-0.07-4T-2%	MD-OCL-250-0.028-4T-1%
	MD580-4T253	132.0	239.0	253.0	110.0	196.0	210.0	MD-ACL-250-0.056-4T-2%	MD-OCL-330-0.021-4T-1%
T9	MD580-4T304	160.0	295.0	304.0	132.0	240.0	253.0	MD-ACL-330-0.042-4T-2%	MD-OCL-330-0.021-4T-1%
	MD580-4T377	200.0	359.0	377.0	160.0	287.0	304.0	MD-ACL-330-0.042-4T-2%	MD-OCL-490-0.014-4T-1%
T10	MD580-4T426	220.0	410.0	426.0	200.0	365.0	377.0	MD-ACL-490-0.028-4T-2%	MD-OCL-490-0.014-4T-1%
	MD580-4T426-L	220.0	410.0	426.0	200.0	365.0	377.0	MD-ACL-490-0.028-4T-2%	/
	MD580-4T465	250.0	456.0	465.0	220.0	410.0	426.0	MD-ACL-660-0.028-4T-2%	MD-OCL-490-0.014-4T-1%
	MD580-4T465-L	250.0	456.0	465.0	220.0	410.0	426.0	MD-ACL-660-0.028-4T-2%	/
T11	MD580-4T520	280.0	507.0	520.0	250.0	441.0	465.0	MD-ACL-660-0.021-4T-2%	MD-OCL-660-0.011-4T-1%
	MD580-4T520-L	280.0	507.0	520.0	250.0	441.0	465.0	MD-ACL-660-0.021-4T-2%	/
	MD580-4T585	315.0	559.0	585.0	280.0	495.0	520.0	MD-ACL-660-0.021-4T-2%	MD-OCL-660-0.011-4T-1%
	MD580-4T585-L	315.0	559.0	585.0	280.0	495.0	520.0	MD-ACL-660-0.021-4T-2%	/
T12	MD580-4T650	355.0	624.0	650.0	315.0	565.0	585.0	MD-ACL-800-0.021-4T-2%	MD-OCL-660-0.011-4T-1%
	MD580-4T650-L	355.0	624.0	650.0	315.0	565.0	585.0	MD-ACL-800-0.021-4T-2%	/
	MD580-4T725	400.0	708.0	725.0	355.0	617.0	650.0	MD-ACL-800-0.017-4T-2%	MD-OCL-800-0.0087-4T-1%
	MD580-4T725-L	400.0	708.0	725.0	355.0	617.0	650.0	MD-ACL-800-0.017-4T-2%	/
	MD580-4T820	450.0	782.0	820.0	400.0	687.0	725.0	MD-ACL-1000-0.017-4T-2%	MD-OCL-800-0.0087-4T-1%
	MD580-4T820-L	450.0	782.0	820.0	400.0	687.0	725.0	MD-ACL-1000-0.017-4T-2%	/

MD580 690 V Model Selection

Structure	Model	No Overload		Light Overload		Heavy Overload	
		Rated Current A	Rated Power kW	Rated Current A	Rated Power kW	Rated Current A	Rated Power kW
S4	MD580-01S-07A4-7-B(-LCD)	7.4	5.5	7	5.5	5.6	4
	MD580-01S-09A9-7-B-(-LCD)	9.9	7.5	9.4	7.5	7.4	5.5
	MD580-01S-14A3-7-B(-LCD)	14.3	11	13.6	11	9.9	7.5
	MD580-01S-0019-7-B(-LCD)	19	15	18.1	15	14.3	11
	MD580-01S-0023-7-B(-LCD)	23	18.5	21.9	18.5	19	15
	MD580-01S-0027-7-B(-LCD)	27	22	25.7	22	23	18.5
S5	MD580-01S-0035-7(-LCD)	35	30	33	30	26	22
	MD580-01S-0042-7(-LCD)	42	37	40	37	35	30
	MD580-01S-0049-7(-LCD)	49	45	47	45	42	37
S6	MD580-01S-0061-7(-LCD)	61	55	58	55	49	45
	MD580-01S-0084-7(-LCD)	84	75	80	75	61	55
S7	MD580-01S-0098-7(-LCD)	98	90	93	90	84	75
	MD580-01S-0119-7(-LCD)	119	110	113	110	98	90
S8	MD580-01S-0142-7(-LCD)	142	132	135	132	119	110
	MD580-01S-0174-7(-LCD)	174	160	165	160	142	132
S9	MD580-01S-0210-7(-LCD)	210	200	200	200	174	160
	MD580-01S-0271-7(-LCD)	271	250	257	250	210	200

MD580 400 V Model Dimensions

Outline and mounting dimensions of T1 to T6 models

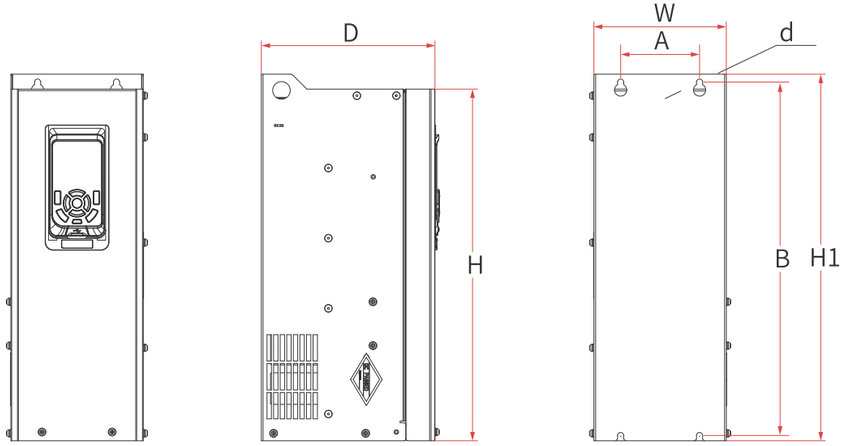

Structure	Mounting Hole Dimension mm (in.)		Outline Dimension mm (in.)				Mounting Hole Diameter mm (in.)	Weight kg (lb)
	A	B	H	H1	W	D		
T1	90 (3.5)	380 (15.0)	381 (15.0)	395 (15.6)	151 (5.9)	175 (6.9)	Ø7 (0.3)	6.2 (13.6)
T2	90 (3.5)	380 (15.0)	381 (15.0)	395 (15.6)	151 (5.9)	181.5 (7.2)	Ø7 (0.3)	7 (15.4)
T3	90 (3.5)	403 (15.9)	404 (15.9)	418 (16.5)	151 (5.9)	198 (7.8)	Ø7 (0.3)	8.2 (18.0)
T4	120 (4.7)	427 (16.8)	427 (16.8)	442 (17.4)	185 (7.3)	203 (8.0)	Ø7 (0.3)	9.9 (21.8)
T5	170 (6.7)	468.5 (18.5)	460 (18.1)	486 (19.1)	210 (8.3)	224 (8.8)	Ø7 (0.3)	14.9 (32.8)
T6	200 (7.9)	438 (17.3)	429 (16.9)	455 (17.9)	250 (9.9)	252.5 (9.9)	Ø7 (0.3)	23.7 (51.9)

MD580 400 V Model Dimensions

Outline and mounting dimensions of T7 to T9 models

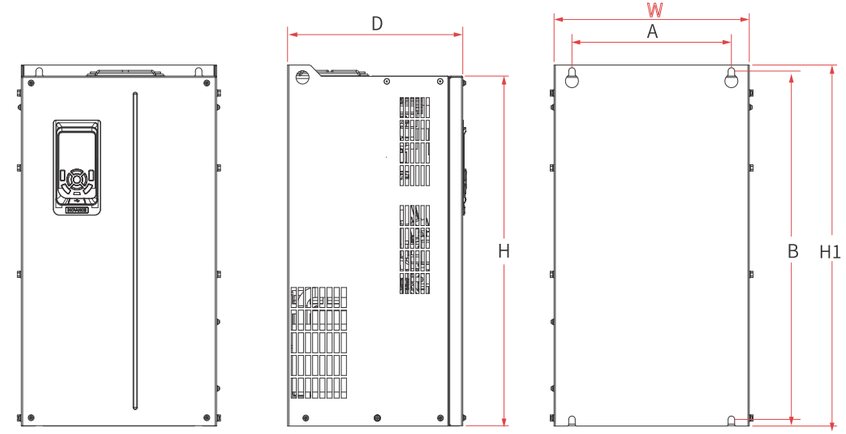

Structure	Mounting Hole Dimension mm (in.)		Outline Dimension mm (in.)				Mounting Hole Diameter mm (in.)	Weight kg (lb)
	A	B	H	H1	W	D		
T7	245 (9.7)	523 (20.6)	525 (20.7)	542 (21.4)	300 (11.8)	269 (10.6)	Ø10 (0.4)	35 (77.2)
T8	270 (10.6)	560 (22.1)	554 (21.8)	580 (22.9)	338 (13.3)	309.4 (12.2)	Ø10 (0.4)	51.5 (113.5)
T9	320 (12.6)	890 (35.1)	874 (34.4)	915 (36.1)	400 (15.8)	314.6 (12.4)	Ø10 (0.4)	85 (187.4)

MD580 400 V Model Dimensions

Outline and mounting dimensions of T10 to T12 models (Without AC output reactors)

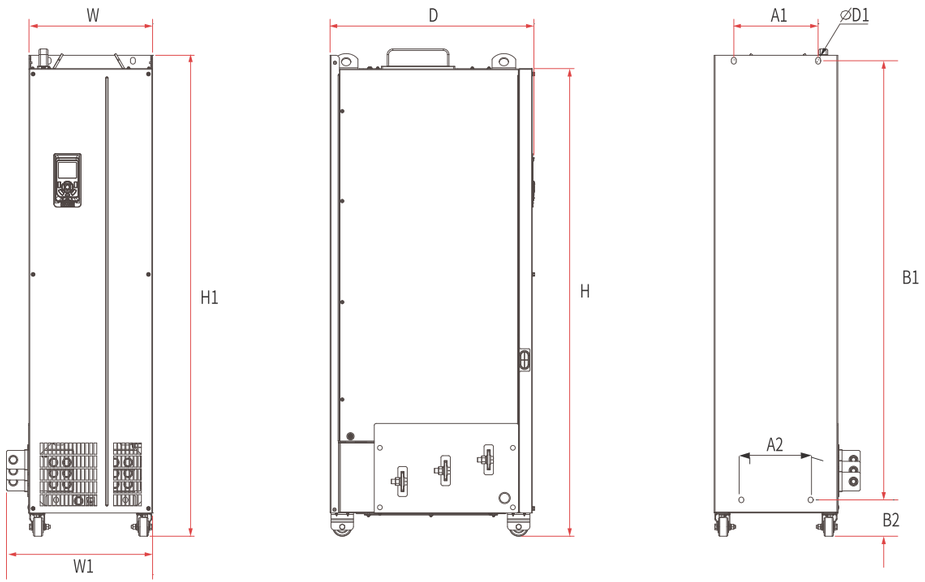

Structure	Mounting Hole Dimension mm (in.)				Outline Dimension mm (in.)					Mounting Hole Diameter mm (in.)	Weight kg (lb)
	A 1	A2	B1	B2	H	H1	W	W1	D	D1	
T10	240 (9.5)	150 (5.9)	1035 (40.8)	86 (3.4)	1086 (42.8)	1134 (44.7)	300 (11.8)	360 (14.2)	500 (19.7)	ϕ13 (0.5)	110 (242.5)
T11	225 (8.9)	185 (7.3)	1175 (46.3)	97 (3.8)	1248 (49.2)	1284 (50.6)	330 (13.0)	390 (15.4)	545 (21.5)	ϕ13 (0.5)	155 (341.7)
T12	240 (9.5)	200 (7.9)	1280 (50.4)	101 (4.0)	1355 (53.4)	1405 (55.4)	340 (13.4)	400 (15.8)	545 (21.5)	ϕ16 (0.6)	185 (407.9)

MD580 400 V Model Dimensions

Outline and mounting dimensions of T10 to T12 models (With AC output reactors)

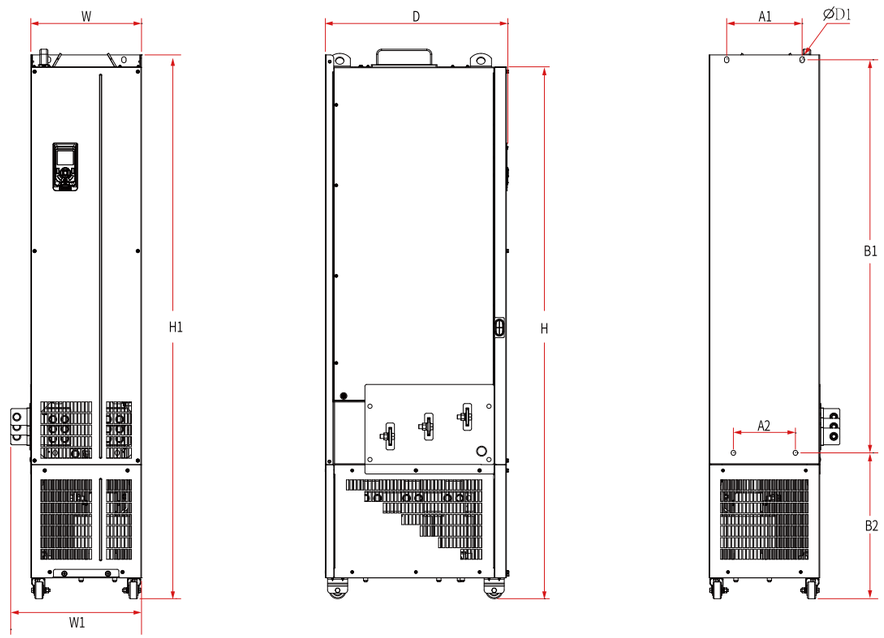

Structure	Mounting Hole Dimension mm (in.)				Outline Dimension mm (in.)					Mounting Hole Diameter mm (in.)	Weight kg (lb)
	A 1	A2	B1	B2	H	H1	W	W1	D	D1	
T10	240 (9.5)	150 (5.9)	1035 (40.8)	424 (16.7)	1424 (56.1)	1472 (58.0)	300 (11.8)	360 (14.2)	500 (19.7)	ϕ13 (0.5)	160 (352.7)
T11	225 (8.9)	185 (7.3)	1175 (46.3)	435 (17.1)	1586 (62.5)	1622 (63.9)	330 (13.0)	390 (15.4)	545 (21.5)	ϕ13 (0.5)	215 (474.0)
T12	240 (9.5)	200 (7.9)	1280 (50.4)	432 (17.0)	1683 (66.3)	1733 (68.3)	340 (13.4)	400 (15.8)	545 (21.5)	ϕ13 (0.5)	245 (540.1)

MD580 690 V Model Dimensions

Outline and mounting dimensions of S4 to S9 models

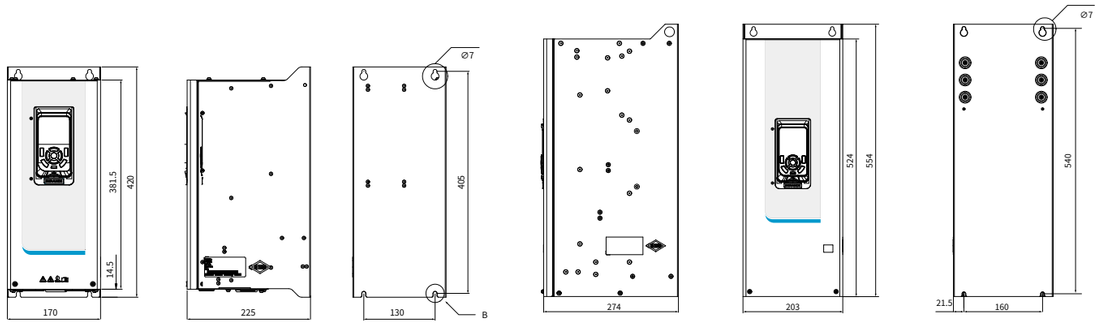

MD580-690V-22KW (S4)

MD580-690V-45KW (S5)

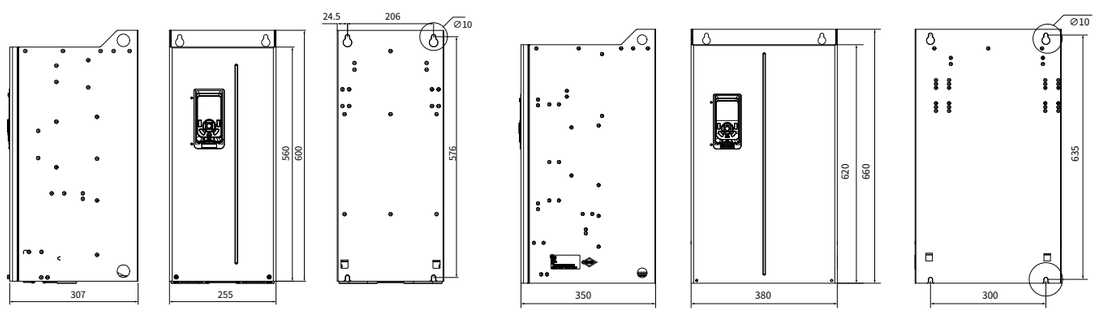

MD580-690V-110KW (S6 to S7)

MD580-690V-250KW (S8 to S9)

Structure	Mounting Hole Dimension mm (in.)		Outline Dimension mm (in.)				Mounting Hole Diameter mm (in.)	Weight kg (lb)
	A	B	H	H1	W	D		
S4	130	405	381.5	420	170	225	Ø7	11
S5	160	540	524	554	203	274	Ø7	20
S6 to S7	206	576	560	600	255	307	∅ 10	35
S8 to S9	300	635	620	660	380	350	∅ 10	65

MD580 Technical Specifications

Item		Technical Specification
Basic functions	Output frequency	V/f control: 0-599 Hz Vector control: 0-599 Hz
	Carrier frequency	0.8-12 kHz (varies with different models)
	Input frequency resolution	Digital setting: 0.01 Hz Analog setting: maximum frequency x 0.025%
	AC drive capacity	5.5-250 kW (690 V series); 0.75-450 kW (400 V series)
	Input voltage	690 V models: Three-phase 525-690 VAC (-15% to +10%, namely 446-759 VAC) 400 V models: Three-phase 380-480 VAC (-15% to +10%, namely 323-528 VAC)
	Motor type and control mode	Three-phase asynchronous motors: SVC, FVC, and V/f control
		Permanent magnet synchronous motors: SVC and FVC
	Speed adjustment range	1:50 (V/f control for asynchronous motors) 1:200 (SVC for asynchronous motors) 1:1000 (FVC for asynchronous motors)
	Speed stability accuracy	±1.0% (V/f control) ±0.5% (SVC) ±0.02% (FVC)
	Speed fluctuation	±0.5% (SVC) ±0.2% (FVC)
	Torque response time	< 20 ms (SVC) < 5 ms (FVC)
	Torque control mode	SVC and FVC
	Torque control accuracy	±5% (SVC) ±3% (FVC)
	Overload capability	Light overload: 110% for 1 minute every 5 minutes Heavy overload: 150% for 1 minute every 5 minutes
	Start torque	0.25 Hz/150% (SVC); 0 Hz/180% (FVC)
	Torque boost	Automatic torque boost; manual torque boost: 0.1% to 30.0%
	V/f curve	Straight-line V/f curve, multi-point V/f curve, square V/f curve, N-power V/f curve (N = 1.2/1.4/1.6/1.8) , and V/f separation curve

Customized functions	Acceleration/ Deceleration curve	Straight-line or S-curve acceleration/deceleration; four modes of acceleration/deceleration time ranging from 0.0s to 1000.0s
	Internal PID	One set of proportional-integral-derivative (PID) parameters to implement closed-loop process control
	Communication/Bus	RS485 communication card: Supports the Modbus RTU protocol. DP communication card: Supports the PROFIBUS DP protocol. CANopen communication card: Supports the CANopen protocol. Ethernet communication card: Supports the Ethernet protocol. PROFINET IO communication card: Supports the PROFINET IO industrial Ethernet protocol. Modbus TCP communication card: Supports the Modbus TCP industrial Ethernet protocol. EtherNet/IP communication card: Supports the EtherNet/IP protocol. EtherCAT communication card: Supports the EtherCAT protocol.
	Running command source	SOP-20 operating panel, InoDriveStudio, LED operating panel, communication, and terminal
	Frequency reference source	Two groups of set values, motorized potentiometer, and multi-reference
	DC braking	DC braking current at startup: 0.0% to 100.0%; DC braking time at startup: 0.00s to 100.00s; Start speed of DC braking for stop: 0.0 RPM to 6000.0 RPM; DC braking current for stop: 0.0% to 100.0%; DC braking time for stop: 0.00s to 100.00s
	Jog control	Jog frequency range: –600.0% to +600.0%; Jog acceleration/deceleration time: 0.0s to 1000.0s
	Multi-speed running	The drive supports up to 16 speeds by using the control terminals.
	Overvoltage/ Overcurrent stall control	The drive limits the current and voltage automatically during operation to avoid frequent tripping caused by overvoltage/overcurrent.
	Quick current limit	This function minimizes the occurrence of overcurrent faults and guarantees proper operation of the drive.
	Torque limit and control	This function limits the torque during running to avoid frequent tripping caused by overcurrent and realizes torque control in the vector control mode.
	VDC voltage control	Load feedback energy compensates for any voltage reduction, allowing the drive to continue to operate for a short time.
	Multi-thread field buses	Modbus RTU, CANopen, PROFIBUS DP, PROFINET IO, Modbus TCP, EtherCAT, and EtherNet/IP
	Multiple encoder types	Differential encoder, open-collector encoder, resolver, ABZ and SSI full closed-loop encoder, and sin-cos and SSI full closed-loop encoder
	Advanced software	The software of the AC drive allows users to configure parameters and provides a virtual oscilloscope that can be used to minotor the internal drive status.
	Motor overtemperature protection	The following temperature sensors are supported: PT100, PT1000, KTY-84, and PTC-130.
	Two control channels and two setpoint channels avaliable	

HMI	AI	Two standard AIs AI1: 0-10 V/0-20 mA input; 12-bit resolution; correction accuracy of 0.5%; PT100/ PT1000/PTC130/KTY84 supported AI2: 0-10 V/0-20 mA input; 12-bit resolution; correction accuracy of 0.5% Two optional AIs (provided by the expansion card) AI3 to AI4 : 0-10 V/0-20 mA input; 12-bit resolution; correction accuracy of 0.5%
	AO	Two standard AOs: 0-10 V or 0-20 mA which is selected via jumper; 12-bit resolution; correction accuracy of 1% Two optional AOs (provided by the expansion card): 0-10 V or 0-20 mA which is selected via parameters; 12-bit resolution; correction accuracy of 1%
	DI	Six standard normal DIs: PNP and NPN input methods available Two optional normal DIs (provided by the expansion card): PNP and NPN input methods available One high-speed DI: PNP and NPN input methods available; input frequency < 100 kHz
	DO	One DO supports normal output and high-speed output. When the DO is used as the normal DO, PNP and NPN output methods are available. When the DO is used as the high-speed DO, a maximum of 100 kHz frequency is supported. Three standard relay output terminals with programmable NO/NC contacts Two optional relay output terminals (provided by the expansion card) with programmable NO/ NC contacts
	Operating panel	LED operating panel as standard, external LCD operating panel as optional
Environment requirements	Operating location	Indoor location without direct sunlight, dust, corrosive gas, combustible gas, oil mist, water vapor, drip, or salt
	Altitude	⩽ 1000 m: derating not required; > 1000 m: derate by 1% for every additional 100 m; Maximum altitude: 3000 m;
	Operating temperature	-10° C to +50° C. When the temperature is higher than 40°C , derate by 1.5% for every additional 1° C.
	Storage temperature	-20° C to +60° C
	Overvoltage category	OVCIII
	Pollution degree	PD2
	IP rating	IP20 (open type, applicable to IEC-certified products)
	Power system	TT/TN (VDR and EMC screws required), IT

MD580 Electrical Wiring

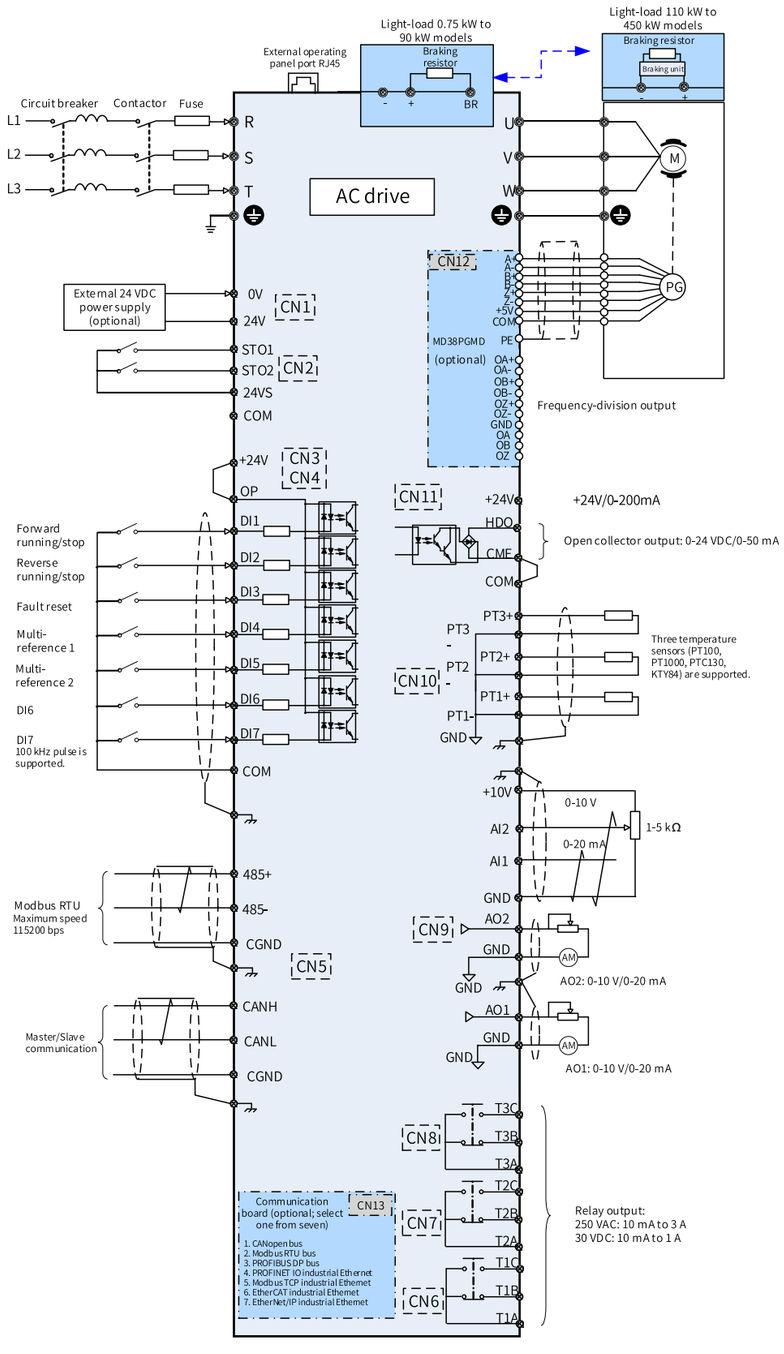

NOTE

NOTE

NOTE