INOVANCE

FORWARD, ALWAYS PROGRESSING

MD520 Series General-Purpose AC Drive

Quick Installation and Commissioning Guide

Industrial Automation

Intelligent Elevator

New Energy Vehicle

Industrial Robot

Rail Transit

Data code 19011712 A00

Preface

About This Guide

The MD520 series AC drive is a general-purpose high-performance current vector control AC drive. It is designed to control and regulate the speed and torque of three-phase AC asynchronous motors and permanent magnet synchronous motors. It can be used to drive textile machines, paper making machines, wire drawing machines, machine tools, packaging machines, food machines, fans, water pumps, and other automated production equipment.

This guide introduces the installation, wiring, commissioning, and trial operation of the product, including installation dimensions, mechanical installation, electrical installation, commissioning and trial operation, troubleshooting, and parameter list.

More Documents

Document Name	Data No.	Description
MD520 Series General-Purpose AC Drive Quick Installation and Commissioning Guide (delivered with the product)	19011712	This guide introduces the installation, wiring, commissioning, troubleshooting, parameters, fault codes, and others.
MD520 Series General-Purpose AC Drive Hardware Guide	19011713	This guide describes the system composition, technical specifications, components, dimensions, options (installation accessories, cables, and peripheral electrical components), expansion cards, as well as product-related daily maintenance and maintenance instructions, certifications, standards, and others.
MD520 Series General-Purpose AC Drive Installation Guide	19011714	This guide describes the installation dimensions, space design, specific installation steps, wiring requirements, routing requirements, option installation requirements, and troubleshooting of common EMC-related problems.
MD520 Series General-Purpose AC Drive Commissioning Guide	19011715	This guide introduces the commissioning tool, process, procedure, troubleshooting, fault codes, and parameters of the AC drive.

Document Name	Data No.	Description
MD520 Series General-Purpose AC Drive Communication Guide	19011716	This guide describes the communication mode, communication networking, and communication configuration of the AC drive.
MD520 Series General-Purpose AC Drive Function Guide	19011717	This guide describes function applications, communication, fault codes, and parameters of the AC drive.

Revision History

Date	Version	Revision Description
January 2022	A00	First release.

How to Obtain

This guide is delivered with the product. You can also obtain the PDF version by the following method:

Log in to Inovance's website (*http://en.inovance.cn/*), choose **Support** > **Download**, search by keyword, and then download the PDF file.

Table of Contents

Preface . . . 1

Fundamental Safety Instructions . . . 4

Product Model List . . . 10

1 Mechanical Installation . . . 11

1.1 Installing T1 to T9 Models . . . 11

1.1.1 Dimensions of T1 to T9 Models . . . 11

1.1.2 Backplate Mounting . . . 13

1.1.3 Through-Hole Mounting . . . 15

1.2 Installing T10 to T12 Models . . . 18

1.2.1 Dimensions of T10 to T12 Models (Without AC Output Reactor) . . . 18

1.2.2 Dimensions of T10 to T12 Models (with AC Output Reactor) . . . 19

1.2.3 Installation in a Cabinet . . . 20

2 Electrical Installation . . . 26

2.1 Electrical Wiring Diagram . . . 26

2.2 Main Circuit Terminals . . . 27

2.3 Control Circuit Terminals . . . 29

3 Commissioning Process . . . 35

3.1 Operating Panel Description . . . 35

3.2 Basic Commissioning Process . . . 38

3.3 Commissioning Process in V/f Control Mode . . . 40

3.4 Commissioning Process in SVC/FVC Control Mode . . . 41

3.5 Commissioning Process in PMVVC Control Mode . . . 42

4 Troubleshooting . . . 43

4.1 Common Faults and Diagnosis . . . 43

4.1.1 Display of Alarms and Faults . . . 43

4.1.2 Restart upon Faults . . . 43

4.1.3 Common Troubleshooting . . . 46

4.1.4 Troubleshooting During Trial Run in Different Control Modes . . . 48

4.2 List of Fault Codes . . . 51

4.3 List of Fault Attributes . . . 65

5 Parameters . . . 74

5.1 List of Parameters . . . 74

Fundamental Safety Instructions

Safety Precautions

1. This chapter presents essential safety instructions for a proper use of the equipment. Before operating the equipment, read through the guide and comprehend all the safety instructions. Failure to comply with the safety instructions may result in death, severe personal injuries, or equipment damage.
2. "CAUTION", "WARNING", and "DANGER" items in the guide only indicate some of the precautions that need to be followed; they just supplement the safety precautions.
3. Use this equipment according to the designated environment requirements. Damage caused by improper use is not covered by warranty.
4. Inovance shall take no responsibility for any personal injuries or property damage caused by improper use.

Safety Levels and Definitions

DANGER	Indicates that failure to comply with the notice will result in death or severe personal injuries.
WARNING	Indicates that failure to comply with the notice may result in death or severe personal injuries.
CAUTION	Indicates that failure to comply with the notice may result in minor or moderate personal injuries or equipment damage.

General Safety Instructions

- Drawings in the guide are sometimes shown without covers or protective guards. Remember to install the covers or protective guards as specified first, and then perform operations in accordance with the instructions.
- The drawings in the guide are shown for illustration only and may be different from the product you purchased.

Unpacking
WARNING • Do not install the equipment if you find damage, rust, or signs of use on the equipment or accessories upon unpacking. • Do not install the equipment if you find water seepage or missing or damaged components upon unpacking. • Do not install the equipment if you find the packing list does not conform to the equipment you received.

CAUTION

- Check whether the packing is intact and whether there is damage, water seepage, dampness, and deformation before unpacking.
- Unpack the package by following the unpacking sequence. Do not strike the package violently.
- Check whether there is damage, rust, or injuries on the surface of the equipment and equipment accessories before unpacking.
- Check whether the package contents are consistent with the packing list before unpacking.

Storage and Transportation

WARNING

- Large-scale or heavy equipment must be transported by qualified professionals using specialized hoisting equipment. Failure to comply may result in personal injuries or equipment damage.
- Before hoisting the equipment, ensure the equipment components such as the front cover and terminal blocks are secured firmly with screws. Loosely-connected components may fall off and result in personal injuries or equipment damage.
- Never stand or stay below the equipment when the equipment is being hoisted by the hoisting equipment.
- When hoisting the equipment with a steel rope, ensure the equipment is hoisted at a constant speed without suffering from vibration or shock. Do not turn the equipment over or let the equipment stay hanging in the air. Failure to comply may result in personal injuries or equipment damage.

CAUTION

- Handle the equipment with care during transportation and mind your steps to prevent personal injuries or equipment damage.
- When carrying the equipment with bare hands, hold the equipment casing firmly with care to prevent parts from falling. Failure to comply may result in personal injuries.
- Store and transport the equipment based on the storage and transportation requirements. Failure to comply will result in equipment damage.
- Avoid storing or transporting the equipment in environments with water splash, rain, direct sunlight, strong electric field, strong magnetic field, and strong vibration.
- Avoid storing the equipment for more than three months. Long-term storage requires stricter protection and necessary inspections.
- Pack the equipment strictly before transportation. Use a sealed box for long-distance transportation.
- Never transport the equipment with other equipment or materials that may harm or have negative impacts on this equipment.

Installation

DANGER

- The equipment must be operated only by professionals with electrical knowledge.

WARNING

- Read through the guide and safety instructions before installation.
- Do not install this equipment in places with strong electric or magnetic fields.
- Before installation, check that the mechanical strength of the installation site can bear the weight of the equipment. Failure to comply will result in mechanical hazards.
- Do not wear loose clothes or accessories during installation. Failure to comply may result in an electric shock.
- When installing the equipment in a closed environment (such as a cabinet or casing), use a cooling device (such as a fan or air conditioner) to cool the environment down to the required temperature. Failure to comply may result in equipment over-temperature or a fire.
- Do not retrofit the equipment.
- Do not fiddle with the bolts used to fix equipment components or the bolts marked in red.
- When the equipment is installed in a cabinet or final assembly, a fireproof enclosure providing both electrical and mechanical protections must be provided. The IP rating must meet IEC standards and local laws and regulations.
- Before installing devices with strong electromagnetic interference, such as a transformer, install a shielding device for the equipment to prevent malfunction.
- Install the equipment onto an incombustible object such as a metal. Keep the equipment away from combustible objects. Failure to comply will result in a fire.

CAUTION

- Cover the top of the equipment with a piece of cloth or paper during installation. This is to prevent unwanted objects such as metal chippings, oil, and water from falling into the equipment and causing faults. After installation, remove the cloth or paper on the top of the equipment to prevent over-temperature caused by poor ventilation due to blocked ventilation holes.
- Resonance may occur when the equipment operating at a constant speed executes variable speed operations. In this case, install the vibration-proof rubber under the motor frame or use the vibration suppression function to reduce resonance.

Wiring

DANGER

- Equipment installation, wiring, maintenance, inspection, or parts replacement must be performed only by professionals.
- Before wiring, cut off all the power supplies of the equipment, and wait for at least the time designated on the equipment warning label before further operations because residual voltage still exists after power-off. After waiting for the designated time, measure the DC voltage in the main circuit to ensure the DC voltage is within the safe voltage range. Failure to comply will result in an electric shock.
- Do not perform wiring, remove the equipment cover, or touch the circuit board with power ON. Failure to comply will result in an electric shock.
- Check that the equipment is grounded properly. Failure to comply will result in an electric shock.

WARNING

- Do not connect the input power supply to the output end of the equipment. Failure to comply will result in equipment damage or even a fire.
- When connecting a drive to the motor, check that the phase sequences of the drive and motor terminals are consistent to prevent reverse motor rotation.
- Cables used for wiring must meet cross sectional area and shielding requirements. The shield of the cable must be reliably grounded at one end.
- Fix the terminal screws with the tightening torque specified in the user guide. Improper tightening torque may overheat or damage the connecting part, resulting in a fire.
- After wiring is done, check that all cables are connected properly and no screws, washers or exposed cables are left inside the equipment. Failure to comply may result in an electric shock or equipment damage.

CAUTION

- During wiring, follow the proper electrostatic discharge (ESD) procedure, and wear an antistatic wrist strap. Failure to comply will damage the equipment or the internal circuits of the equipment.
- Use shielded twisted pairs for the control circuit. Connect the shield to the grounding terminal of the equipment for grounding purpose. Failure to comply will result in equipment malfunction.

Power-on

DANGER

- Before power-on, check that the equipment is installed properly with reliable wiring and the motor can be restarted.
- Check that the power supply meets equipment requirements before power-on to prevent equipment damage or a fire.
- After power-on, do not open the cabinet door or protective cover of the equipment, touch any terminal, or disassemble any unit or component of the equipment. Failure to comply will result in an electric shock.

WARNING

- Perform a trial run after wiring and parameter setting to ensure the equipment operates safely. Failure to comply may result in personal injuries or equipment damage.
- Before power-on, check that the rated voltage of the equipment is consistent with that of the power supply. Failure to comply may result in a fire.
- Before power-on, check that no one is near the equipment, motor, or machine. Failure to comply may result in death or personal injuries.

Operation

DANGER

- The equipment must be operated only by professionals. Failure to comply will result in death or personal injuries.
- Do not touch any connecting terminals or disassemble any unit or component of the equipment during operation. Failure to comply will result in an electric shock.

WARNING

- Do not touch the equipment casing, fan, or resistor with bare hands to feel the temperature. Failure to comply may result in personal injuries.
- Prevent metal or other objects from falling into the equipment during operation. Failure to comply may result in a fire or equipment damage.

Maintenance

DANGER

- Equipment installation, wiring, maintenance, inspection, or parts replacement must be performed only by professionals.
- Do not maintain the equipment with power ON. Failure to comply will result in an electric shock.
- Before maintenance, cut off all the power supplies of the equipment and wait for at least the time designated on the equipment warning label.
- In case of a permanent magnet motor, do not touch the motor terminals immediately after power-off because the motor terminals will generate induced voltage during rotation even after the equipment power supply is off. Failure to comply will result in an electric shock.

WARNING

- Perform routine and periodic inspection and maintenance on the equipment according to maintenance requirements and keep a maintenance record.

Repair

DANGER

- Equipment installation, wiring, maintenance, inspection, or parts replacement must be performed only by professionals.
- Do not repair the equipment with power ON. Failure to comply will result in an electric shock.
- Before inspection and repair, cut off all the power supplies of the equipment and wait for at least the time designated on the equipment warning label.

WARNING

- When the fuse is blown or the circuit breaker or earth leakage current breaker (ELCB) trips, wait for at least the time designated on the equipment warning label before power-on or further operations. Failure to comply may result in death, personal injuries or equipment damage.
- When the equipment is faulty or damaged, the troubleshooting and repair work must be performed by professionals that follow the repair instructions, with repair records kept properly.
- Replace quick-wear parts of the equipment according to the replacement instructions.
- Do not use damaged equipment. Failure to comply may result in death, personal injuries, or severe equipment damage.
- After the equipment is replaced, check the wiring and set parameters again.

Disposal
WARNING • Dispose of retired equipment in accordance with local regulations and standards. Failure to comply may result in property damage, personal injuries, or even death. • Recycle retired equipment by observing industry waste disposal standards to avoid environmental pollution.

Safety Labels

For safe equipment operation and maintenance, comply with the safety labels on the equipment. Do not damage or remove the safety labels. See the following table for descriptions of the safety labels.

Safety Label	Description
	• Read through the safety instructions before operating the equipment. Failure to comply may result in death, personal injuries, or equipment damage. • Do not touch the terminals or remove the cover with power ON or within 10 min after power-off. Failure to comply will result in an electric shock.

Product Model List

The following table lists mapping between the product model and structure.

Table –1 Mapping between product model and structure

Structure	Model (Three Phase 380–480 V)	Model (Three Phase 200–240 V)	Model (Single Phase 200-240 V)
T1	MD520-4T0.4B(S) MD520-4T0.7B(S) MD520-4T1.1B(S) MD520-4T1.5B(S) MD520-4T2.2B(S) MD520-4T3.0B(S)	MD520-2T0.4B(S) MD520-2T0.7B(S) MD520-2T1.1B(S) MD520-2T1.5B(S)	-
T2	MD520-4T3.7B(S) MD520-4T5.5B(S)	MD520-2T2.2B(S) MD520-2T3.7B(S)	MD520-2S0.4B(S) MD520-2S0.7B(S) MD520-2S1.5B(S) MD520-2S2.2B(S)
T3	MD520-4T7.5B(S) MD520-4T11B(S)	MD520-2T5.5B(S)	-
T4	MD520-4T15B(S)	MD520-2T7.5B(S)	-
T5	MD520-4T18.5(B)(S)(-T) MD520-4T22(B)(S)(-T)	MD520-2T11(B)(S)(-T)	-
T6	MD520-4T30(B)(S) MD520-4T37(B)(S)	MD520-2T15(B)(S) MD520-2T18.5(B)(S)	-
T7	MD520-4T45(B)(S) MD520-4T55(B)(S)	MD520-2T22(B)(S) MD520-2T30(B)(S)	-
T8	MD520-4T75(B)(S) MD520-4T90(S) MD520-4T110(S)	MD520-2T37(B)(S) MD520-2T45(S) MD520-2T55(S)	-
T9	MD520-4T132(S) MD520-4T160(S)	MD520-2T75(S)	-
T10	MD520-4T200(S)(-L) MD520-4T220(S)(-L)	MD520-2T90(S) MD520-2T110(S)	-
T11	MD520-4T250(S)(-L) MD520-4T280(S)(-L)	MD520-2T132(S)	-
T12	MD520-4T315(S)(-L) MD520-4T355(S)(-L) MD520-4T400(S)(-L)	MD520-2T160(S) MD520-2T200(S)	-

Note:

- (B): with the braking unit
- (S): with the safe torque off (STO) function
- (-T): with the DC reactor
- (-L): with the AC output reactor

1 Mechanical Installation

1.1 Installing T1 to T9 Models

1.1.1 Dimensions of T1 to T9 Models

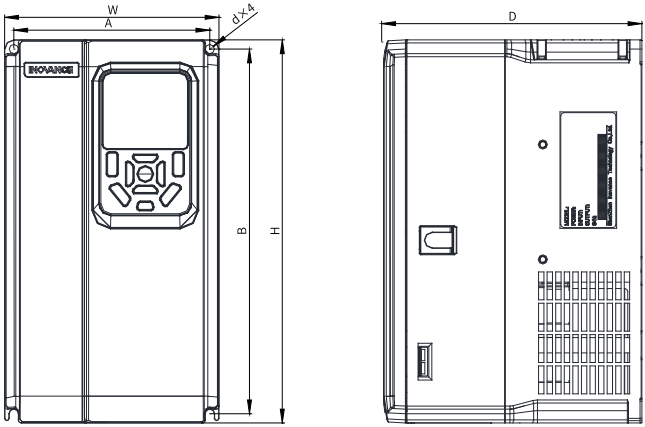

Figure 1-1 Outline dimensions and mounting dimensions of T1 to T4 models

Table 1–1 Outline dimensions and mounting dimensions of T1 to T4 models

Structure	Mounting Hole Spacing mm (in.)		Outline Dimension mm (in.)			Mounting Hole Diameter mm (in.)	Weight kg (lb)
	A	B	H	W	D		
T1	119 (4.7)	189 (7.5)	200 (7.9)	130 (5.1)	150 (6.0)	Ø5 (0.2)	1.6 (3.5)
T2	119 (4.7)	189 (7.5)	200 (7.9)	130 (5.1)	160 (6.4)	Ø5 (0.2)	2.0 (4.4)
T3	128 (5.0)	238 (9.4)	250 (9.9)	140 (5.5)	168.3 (6.7)	Ø6 (0.2)	3.3 (7.3)
T4	166 (6.5)	266 (10.5)	280 (11.0)	180 (7.1)	169 (6.7)	Ø6 (0.2)	4.3 (9.5)

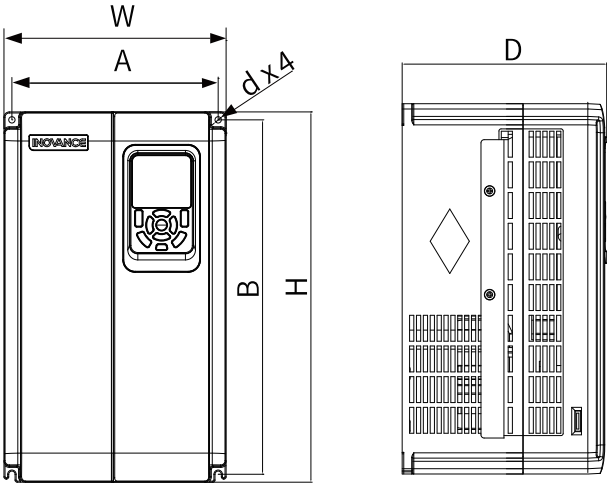

Figure 1-2 Outline dimensions and mounting dimensions of T5 to T6 models

Table 1–2 Outline dimensions and mounting dimensions of T5 to T6 models

Structure	Mounting Hole Spacing mm (in.)		Outline Dimension mm (in.)				Mounting Hole Diameter mm (in.)	Weight kg (lb)
	A	B	H	H1	W	D		
T5 (without DC reactor)	195 (7.7)	335 (13.2)	350 (13.8)	-	210 (8.3)	193.4 (7.6)	Ø6 (0.2)	7.6 (16.8)
T5 (-T, with the DC reactor)	195 (7.7)	335 (13.2)	350 (13.8)	-	210 (8.3)	193.4 (7.6)	Ø6 (0.2)	10.0 (22.0)
T6	230 (9.1)	380 (15.0)	400 (15.8)	-	250 (9.9)	220.8 (8.7)	Ø7 (0.3)	17.5 (38.6)

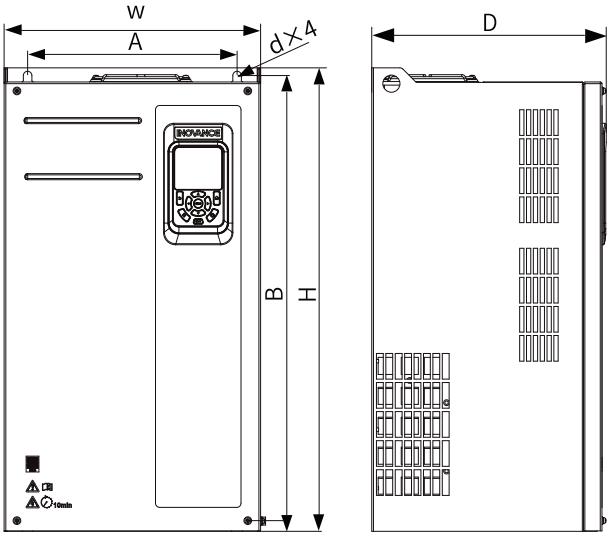

Figure 1-3 Outline dimensions and mounting dimensions of T7 to T9 models

Table 1–3 Outline dimensions and mounting dimensions of T7 to T9 models

Structure	Mounting Hole Spacing mm (in.)		Outline Dimension mm (in.)				Mounting Hole Diameter mm (in.)	Weight kg (lb)
	A	B	H	H1	W	D		
T7	245 (9.7)	523 (20.6)	525 (20.7)	542 (21.4)	300 (11.8)	275 (10.8)	Ø10 (0.4)	35 (77.2)
T8	270 (10.6)	560 (22.1)	554 (21.8)	580 (22.9)	338 (13.3)	315 (12.4)	Ø10 (0.4)	51.5 (113.5)
T9	320 (12.6)	890 (35.1)	874 (34.4)	915 (36.1)	400 (15.8)	320 (12.6)	Ø10 (0.4)	85 (187.4)

1.1.2 Backplate Mounting

For backplate mounting, fasten all retaining nuts, instead of only the two retaining nuts on the top of the AC drive. Otherwise, the connections will come loose or damaged with time due to uneven distribution of loads.

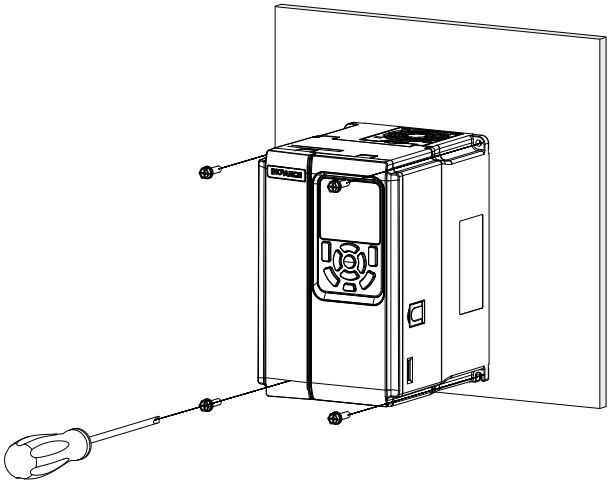

Figure 1-4 Backplate mounting (T1 to T6 models)

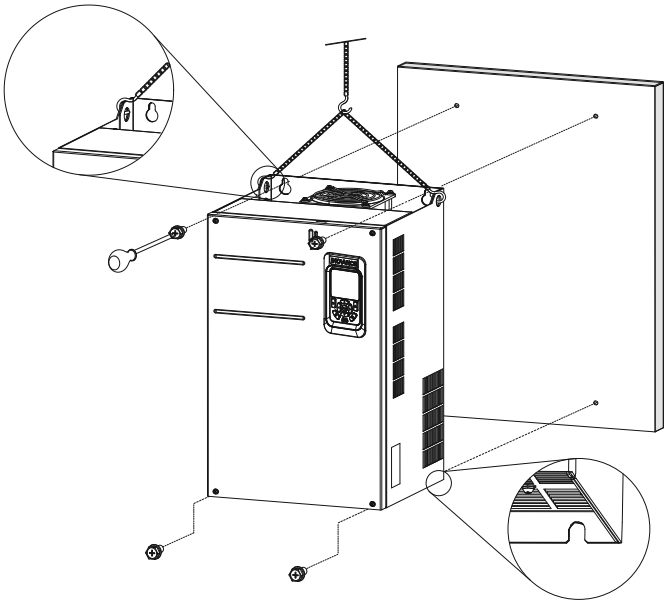

Figure 1-5 Backplate mounting (T7 to T9 models)

1.1.3 Through-Hole Mounting

T1 to T6 models

1. Frame the AC drive with the bracket and tighten the bracket fixing screws on both sides of the AC drive.

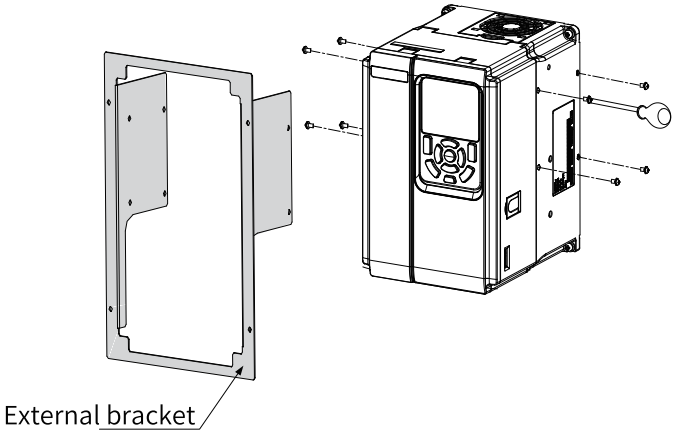

The following figure shows an AC drive with a bracket mounted.

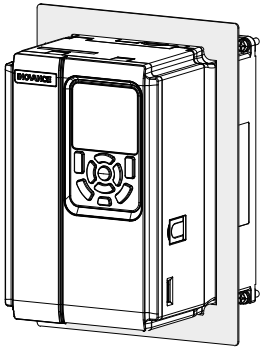

2. Fasten the AC drive with the bracket onto the mounting backplate of the control cabinet.

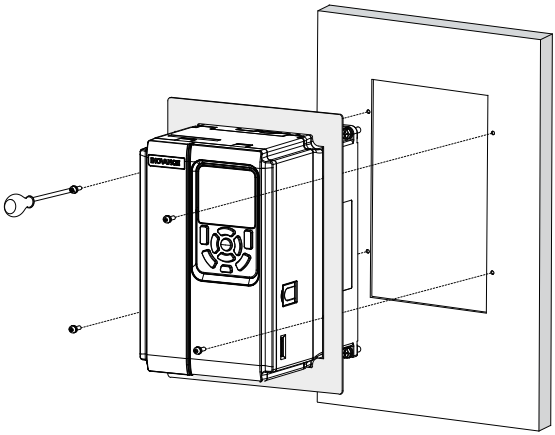

The following figure shows an AC drive that is through-hole mounted.

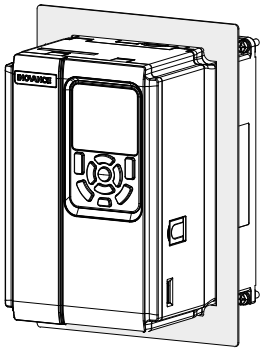

T7 to T9 models

1. Fasten brackets from the two sides of the AC drive.

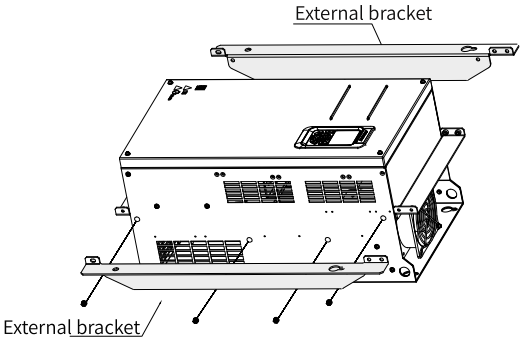

The following figure shows an AC drive with brackets mounted.

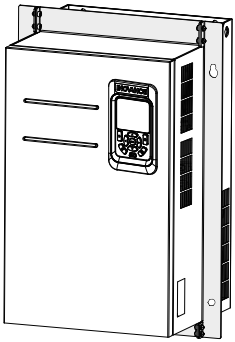

2. Fasten the AC drive onto the backplate of the control cabinet from the front of the control cabinet.

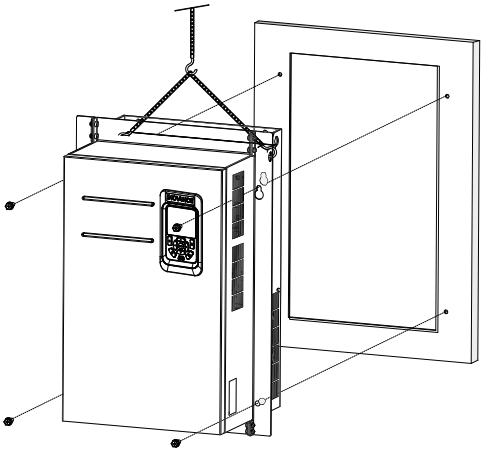

The following figure shows an AC drive that is through-hole mounted.

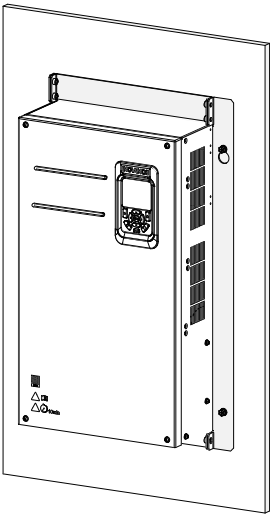

1.2 Installing T10 to T12 Models

1.2.1 Dimensions of T10 to T12 Models (Without AC Output Reactor)

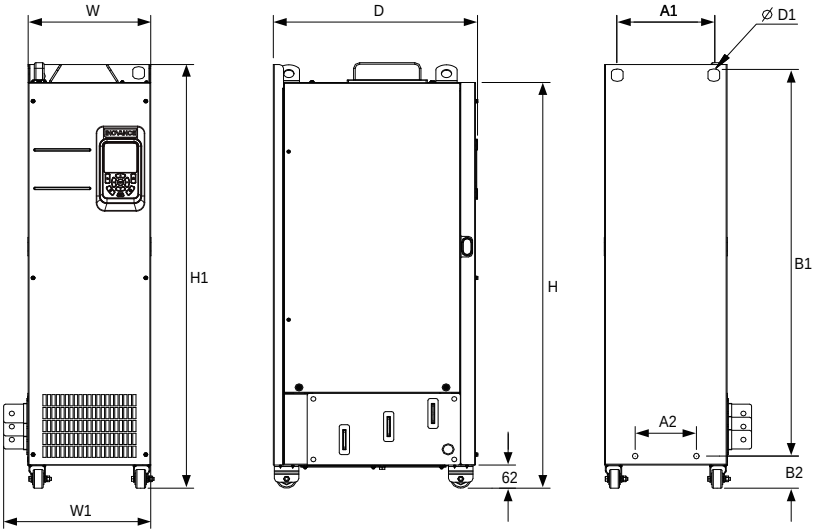

Figure 1-6 Outline dimensions and mounting dimensions of T10 to T12 models (without AC output reactor)

Table 1–4 Outline dimensions and mounting dimensions of T10 to T12 models (without AC output reactor)

Appearance Structure	Mounting Hole Spacing mm (in.)				Outline Dimension mm (in.)					Mounting Hole Diameter mm (in.)	Weight kg (lb)
	A1	A2	B1	B2	H	H1	W	W1	D	D1	
T10	240 -9.5	150 -5.9	1035 -40.8	86 -3.4	1086 -42.8	1134 -44.7	300 -11.8	360 -14.2	500 -19.7	ϕ13(0.5)	110 (242.5)
T11	225 -8.9	185 -7.3	1175 -46.3	97 -3.8	1248 -49.2	1284 -50.6	330 -13	390 -15.4	545 -21.5	ϕ13(0.5)	155 (341.7)
T12	240 -9.5	200 -7.9	1280 -50.4	101 -4	1355 -53.4	1405 -55.4	340 -13.4	400 -15.8	545 -21.5	ϕ16(0.6)	185 (407.9)

1.2.2 Dimensions of T10 to T12 Models (with AC Output Reactor)

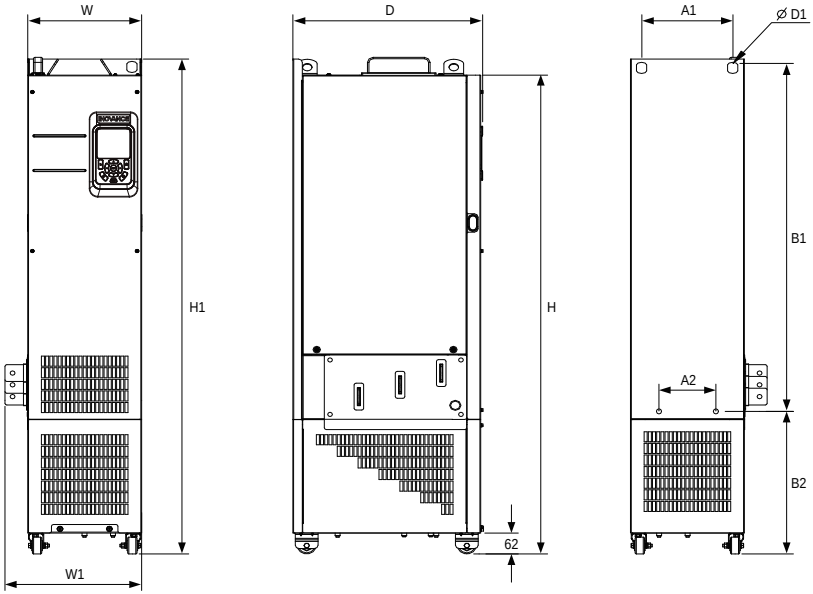

Figure 1-7 Outline dimensions and mounting dimensions of T10 to T12 models (with AC output reactor)

Table 1–5 Outline dimensions and mounting dimensions of T10 to T12 models (with AC output reactor)

Structure	Mounting Hole Spacing mm (in.)				Outline Dimension mm (in.)					Mounting Hole Diameter mm (in.)	Weight kg (lb)
	A1	A2	B1	B2	H	H1	W	W1	D	D1	
T10	240 (9.5)	150 (5.9)	1035 (40.8)	424 (16.7)	1424 (56.1)	1472 (58.0)	300 (11.8)	360 (14.2)	500 (19.7)	ϕ13(0.5)	160 (352.7)
T11	225 -8.9	185 (7.3)	1175 (46.3)	435 (17.1)	1586 (62.5)	1622 (63.9)	330 (13.0)	390 (15.4)	545 (21.5)	ϕ13(0.5)	215 (474.0)
T12	240 -9.5	200 (7.9)	1280 (50.4)	432 (17.0)	1683 (66.3)	1733 (68.3)	340 (13.4)	400 (15.8)	545 (21.5)	ϕ16(0.6)	245 (540.1)

1.2.3 Installation in a Cabinet

Context

Use a nine-fold profile cabinet (PS cabinet) to contain the AC drive. Nine-fold profile cabinets employ assembled frames and therefore save the cost. Columns of the cabinets come with openings conforming to common standards and therefore simplify installation of fixing beams and reinforcements, making the cabinets versatile. Nine-fold profile cabinets are more reliable than standard cabinets. They are considered as the benchmark of the industry. *"Figure 1–8 " on page 21* shows the cross section of the nine-fold profile.

Procedure

1. Install the fixing beams in the nine-fold profile cabinet (PS cabinet) and reserve mounting holes for fastening the AC drive.

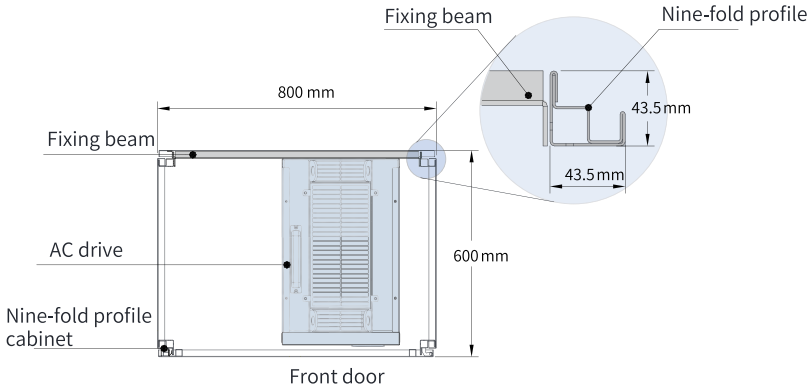

Figure 1-8 Top view of a cabinet for T11 and T12 models

To install a T11 or T12 model in a nine-fold profile cabinet 600 mm in depth, fold the back mounting plate inward, as shown in *"Figure 1–9 " on page 21* , to borrow the space of the column. (This requirement is not applicable to standard cabinets greater than 800 mm in depth.) To install a T11 or T12 model in a cabinet with access doors at both the front and the back, use a cabinet that is 800 mm in depth, instead of a 600 mm one.

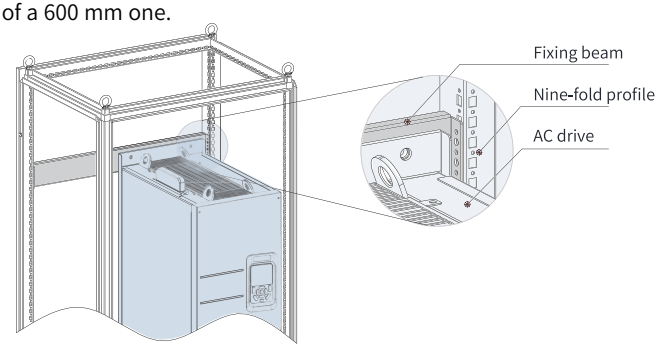

Figure 1-9 Perspective view of a cabinet for T11 and T12 models

2. Fix the bottom mounting bracket in the nine-fold profile cabinet.
   Use six M5 self-tapping screws to fix the mounting bracket onto the rack base of the nine-fold profile cabinet, as shown in *"Figure 1–10 " on page 22* .

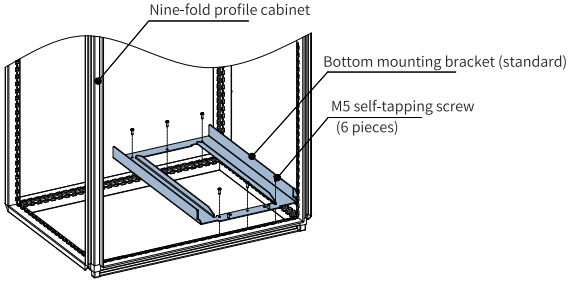

Figure 1-10 Installing the bottom mounting bracket

Drill holes for the mounting bracket and assemble the bracket on site if the cabinet is not a nine-fold profile one.

3. Assemble the guide rails (model: MD500-AZJ-A3T10) and mount them on the cabinet.
   a. Assemble the guide rails, as shown in *"Figure 1–11 " on page 22* .

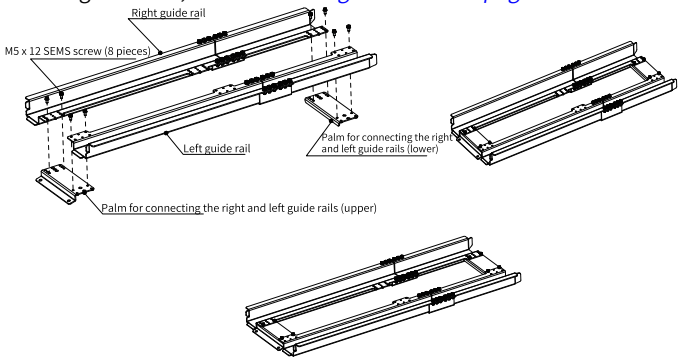

Figure 1-11 Assembling guide rails

   b. Align the two round holes on the front end of the guide rails with the screws of the mounting bracket, and lock them with two M6 nuts, to mount the guide rails on the cabinet, as shown in *"Figure 1–12 " on page 23* .

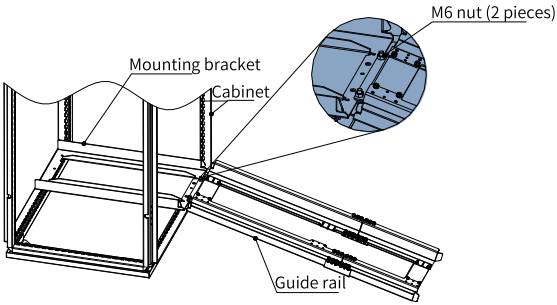

Figure 1-12 Mounting the guide rails on the cabinet

4. Remove the cover from the AC drive.
   For details about how to remove the cover, see "Removing the Cover". Remove the cover to access the auxiliary handle on the AC drive.
5. Align the casters of the AC drive with the guide rails and gently push the AC drive into the cabinet.
   When pushing or pulling the AC drive, use an auxiliary strap to prevent it from toppling. It is recommended that two persons cooperate to complete this job.

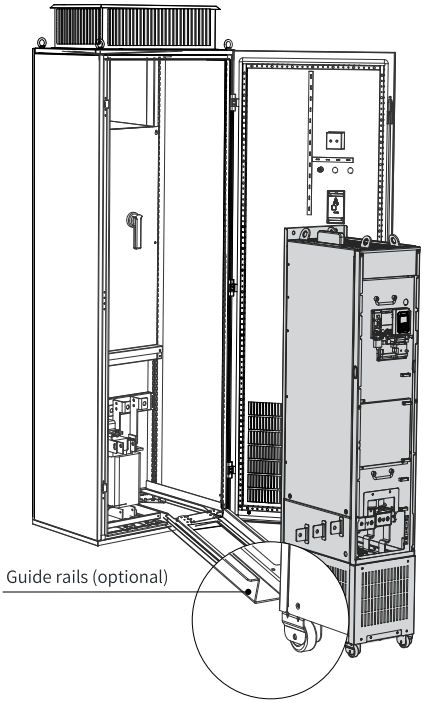

Figure 1-13 Aligning the casters with the guide rails

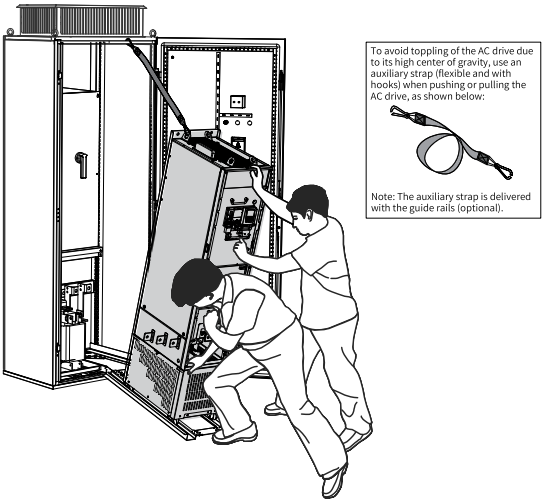

Figure 1-14 Pushing the AC drive into the cabinet

6. Remove the auxiliary strap, and drive screws into the four mounting holes on the back of the AC drive to fasten the AC drive to the fixing beams in the cabinet.

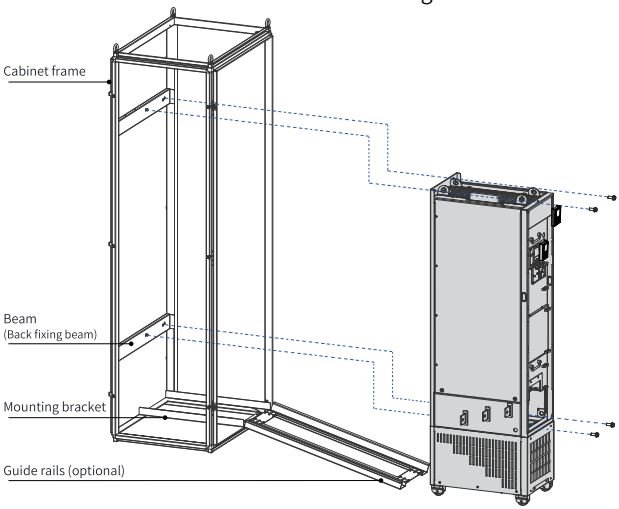

Figure 1-15 Fastening the AC drive to the fixing beams

7. Verify that the AC drive is securely installed, and remove the guide rails.
8. Remove the baffle from the top air filter of the AC drive. The baffle is used to prevent foreign objects, such as screws, from falling into the air filter during installation of the AC drive.

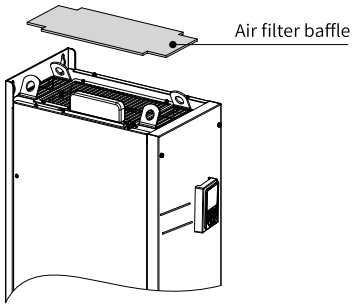

Figure 1-16 Removing the air filter baffle

2 Electrical Installation

2.1 Electrical Wiring Diagram

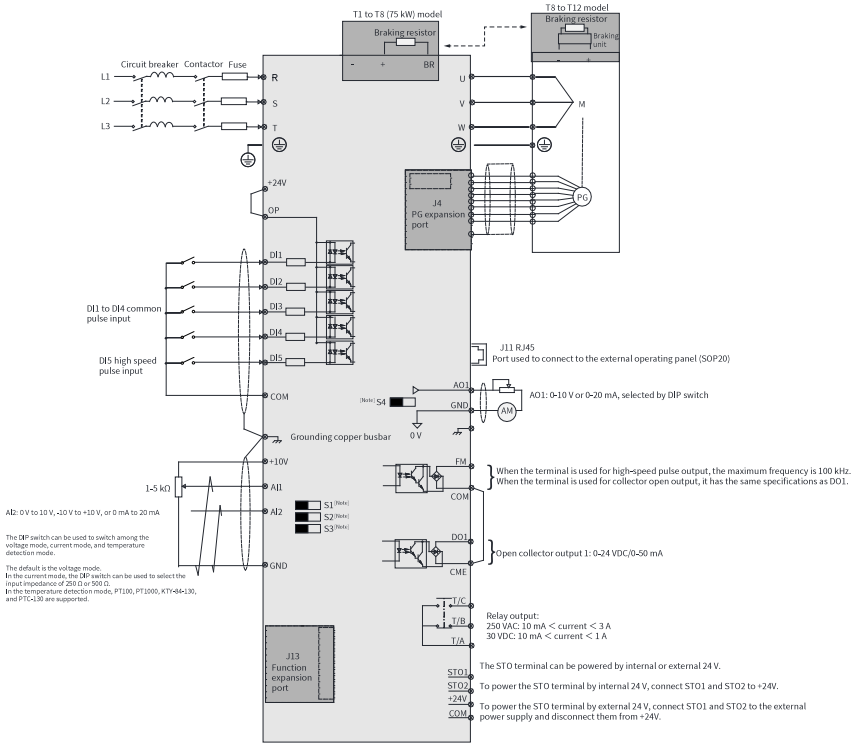

Figure 2-1 Standard wiring

Note

- For details on S1 to S4 DIP switches, see *"Table 2–3 Description of control circuit terminals" on page 31*.
- For three-phase 380–480 VAC drives, a 0.4–75 kW model differs from a 90–450 kW model in the wiring detail marked by the double arrows in the figure.
- For three-phase 200–240 VAC drives, a 0.4–37 kW model differs from a 45–200 kW model in the wiring detail marked by the double arrows in the figure.

2.2 Main Circuit Terminals

T1 to T9 models

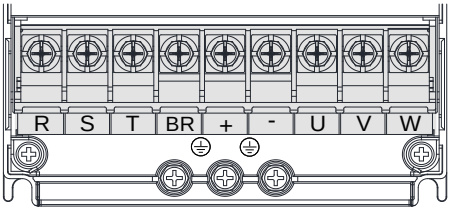

Figure 2-2 Main circuit terminals of T1 to T4 models

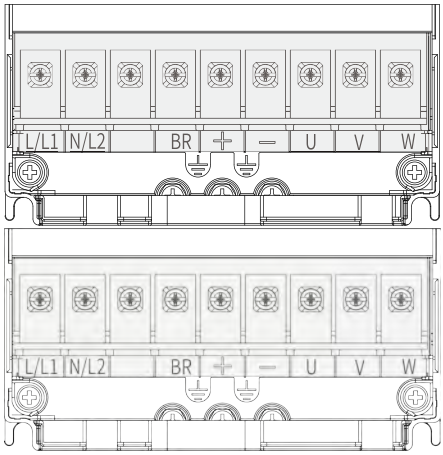

Figure 2-3 Main circuit terminals of T2 models (single phase)

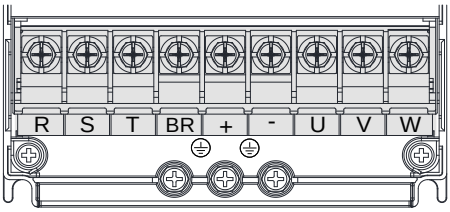

Figure 2-4 Main circuit terminals of T1 to T4 models

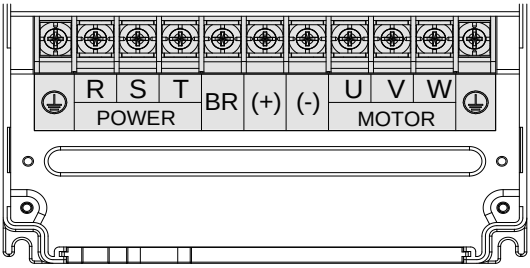

Figure 2-5 Main circuit terminals of T5 to T8 models

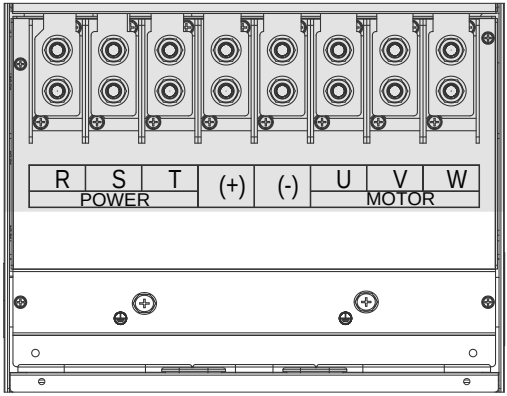

Figure 2-6 Main circuit terminals of T9 models

Table 2–1 Description of main circuit terminals

Mark	Name	Description
R, S, T	Three-phase power supply input terminals	Connected to AC input three-phase power supply.
(+), (-)	Positive and negative terminals of DC bus	Common DC busbar input, connected to the external braking unit of T9 models and above.
(+), BR-	Braking resistor connection terminals	Connected to the braking resistor of T8 models and below.
U, V, W	Output terminals	Connected to a three-phase motor.
⏚	Grounding terminal (PE)	Used for protective grounding.

T10 to T9 models

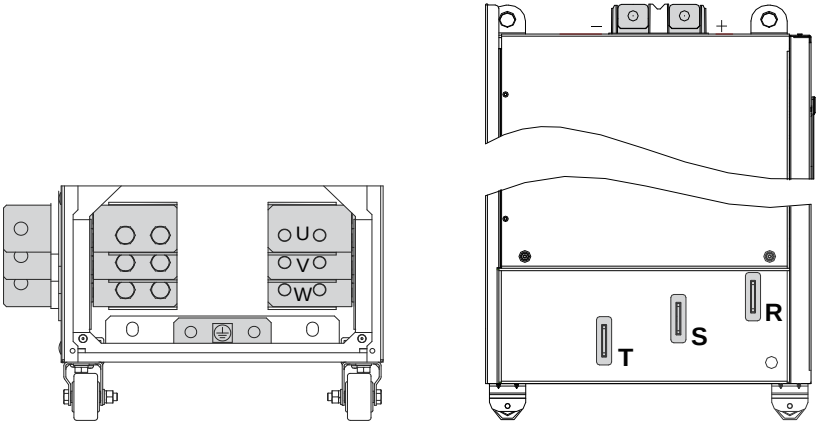

Figure 2-7 Main circuit terminals of T10 to T12 models

Table 2–2 Descriptions of main circuit terminals

Mark	Name	Description
R, S, T	Three-phase power supply input terminals	Connected to AC input three-phase power supply.
+, -	Positive and negative terminals of DC bus	Common DC busbar input, connected to an external braking unit.
U, V, W	AC drive output terminals	Connected to a three-phase motor.
⏚	Grounding terminal (PE)	Used for protective grounding.

2.3 Control Circuit Terminals

"Table 2–4 " on page 33 describes control circuit terminals.

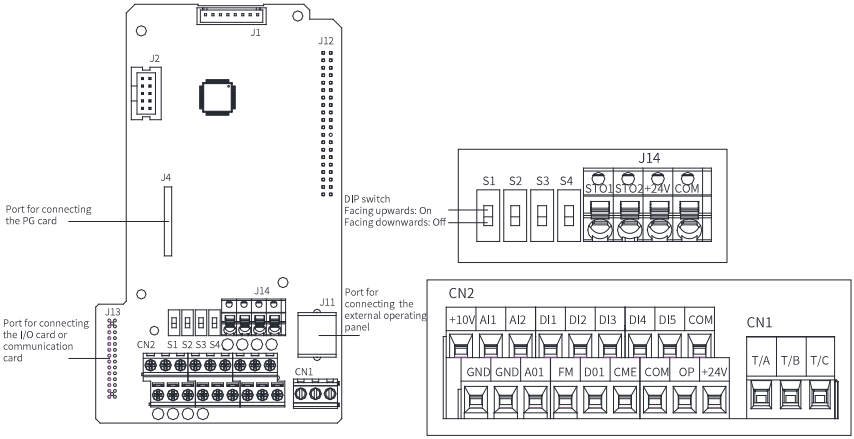

Figure 2-8 Control circuit terminals

Table 2–3 Description of control circuit terminals

Type	Mark	Name	Function Description
Power supply	+10V-GND	External +10 V power supply	The terminal is used to provide +10 V power supply to an external unit with the maximum output current 10 mA. Generally, it is used to power an external potentiometer with resistance ranging from 1 kΩ to 5 kΩ.
	+24V-COM	External +24 V power supply	The terminal is used to provide +24 V power supply to an external unit. Generally, it is used to power DI/DO terminals and external sensors. The maximum output current is 200 mA[Note 1].
	OP	Input terminal for external power supply	It is connected to +24V by default. To use an external signal to drive terminals DI1 to DI5, disconnect OP from +24V and connect it to an external power supply.
Analog input	AI1-GND	Analog input terminal 1	Input voltage range: –10 VDC to +10 VDC Input impedance: 22 kΩ
	AI2-GND	Analog input terminal 2	The terminal supports voltage input (default), current input, and temperature input. When used as voltage/current input, the terminal supports 0 V to 10 V, -10 V to +10 V, or 0 mA to 20 mA with the resolution 12-bit and the correction accuracy 0.3%. The input impedance is 22 kΩ for voltage input and 500 Ω or 250 Ω for current input, which is set by S2 and S3 DIP switches[Note [2]].

Type	Mark	Name	Function Description
Digital input	DI1-OP	Digital input 1	Photocoupler isolation and bipolar input Input impedance: 1.72 kΩ Voltage range for effective level input: 9 V to 30 V
	DI2-OP	Digital input 2	
	DI3-OP	Digital input 3	
	DI4-OP	Digital input 4	
	DI5-OP	Digital input 5	Besides features of DI1 to DI4, DI5 can also be used for high-speed pulse input. Input impedance: 1.16 kΩ Maximum input frequency: 100 kHz Operating voltage range: 15 V to 30 V
Analog output	AO1-GND	Analog output 1	The DIP switch on the control board is used to determine voltage output (default) or current output. Output voltage range: 0–10 V Output current range: 0–20 mA
Digital output	DO1-CME	Digital output 1	Photocoupler isolation and bipolar open collector output Output voltage range: 0–24 V Output current range: 0–50 mA Note that CME and COM are internally insulated, but are shorted externally by jumper as the factory settings. In this case, DO1 is driven by +24V. To drive DO1 by external power supply, remove the jumper between CME and COM.
	FM-COM	High-speed pulse output	The terminal is set by F5-00 (FM terminal output selection). When the terminal is used for high-speed pulse output, the maximum frequency is 100 kHz. When the terminal is used for collector open output, it has the same specifications as DO1.
Relay output	T/A	Common terminal	Contact driving capacity: 250 VAC, 3 A, COSø = 0.4 30 VDC, 1 A
	T/B	Normally closed terminal	
	T/C	Normally open terminal	

Type	Mark	Name	Function Description
Auxiliary ports	J13	Expansion card terminal	It is a 28-conductor terminal used to connect optional cards, such as bus cards
	J4	PG card terminal	It is used to connect the resolver, differential, and 23-bit encoders.
	J11	Port for external operating panel	It is used to connect the LCD operating panel (SOP-20) and the LED operating panel (MDKE-10).
DIP switches	S1		For details, see *"Table 2–4 Description of control circuit terminals 2" on page 33*.
	S2		For details, see *"Table 2–4 Description of control circuit terminals 2" on page 33*.
	S3		For details, see *"Table 2–4 Description of control circuit terminals 2" on page 33*.
	S4		It is used to determine whether AO1 supports the current mode. If S4 is closed, AO1 supports the current mode.

Table 2–4 Description of control circuit terminals 2

DIP Switch				Description
Mark	S1	S2	S3	
Name	OFF	OFF	OFF	Voltage mode for AI2
	ON	OFF	OFF	Temperature mode for AI2. The temperature sensor type can be set by F9-57.
	OFF	ON	OFF	Current mode for AI2 with the input impedance 500 Ω
	OFF	ON	ON	Current mode for AI2 with the input impedance 250 Ω

Note

- [Note 1] If the ambient temperature exceeds 23°C, the output current must be derated by 1.8 mA for every additional 1°C. The maximum output current is 170 mA at 40°C. When OP and 24V are shorted, the maximum output current is calculated by the following formula: 170 mA minus current over the DI.
- [Note 2] Based on the maximum output voltage of the signal source, select 500 Ω or 250 Ω impedance. For example, if 500 Ω is selected, the maximum output voltage cannot be lower than 10 V so that AI2 can measure 20 mA current.

3 Commissioning Process

3.1 Operating Panel Description

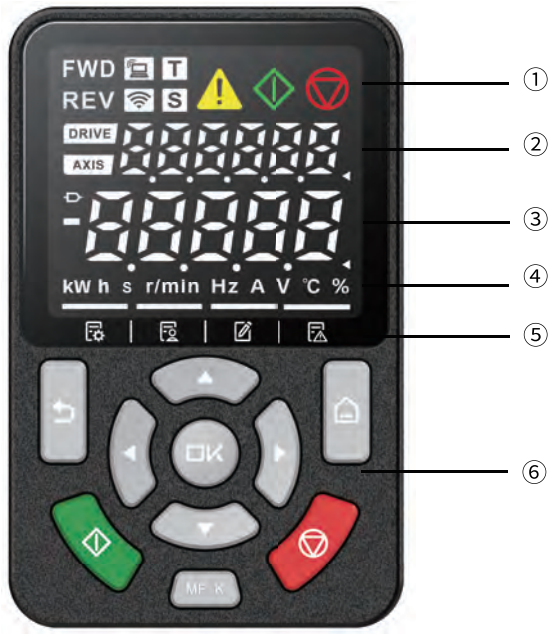

Figure 3-1 Operating panel display

Table 3–1 Operating panel description

No.	Name	Description
①	Status display area	-
②	Multi-function display area	• Key test and auto-tuning • Fault and system status monitoring • Site number, jog, and STO status
③	Parameter display	-
④	Unit display area	-
⑤	Menu	The menus from left to right are the basic menu, user menu, check menu, and fault history menu.
⑥	Key	-

Table 3–2 Status description

Icon	Name	Function Description	Status Description
FWD	FWD	Forward run	-
REV	REV	Reverse run	-
	Local/remote	Local/remote connection mode	• Steady off: Local control • Steady on: Terminal control • Flash every 500 ms: Communication control • Flash every 100 ms: Others
	Wi-Fi	Wi-Fi connection mode	Steady off
T	Torque control	Torque control mode	Steady on: torque control mode
S	Speed control	Speed control mode	Steady on: speed control mode
	Alarm	Alarm state	Steady on: A fault occurs.
	Run	Running state	-
	Stop	Stop state	-

Table 3–3 Key description

Key	Name	Function
	Menu key	Long press the menu key to switch between the parameter display area and multi-function display area. In the multi-function display area, press the menu key to switch among the basic menu, user menu, check menu, and fault history menu.
	Back key	Return to the last interface or undo the operation.

Key	Name	Function
	OK key	Enter the settings interface or confirm the settings.
	Navigation keys	In the multi-function display area, press the right or left key to switch the display status. Parameter display area: • Basic menu, user menu, and check menu: In the monitoring interface, use the down key as the potentiometer, and press the left and right keys to switch the monitoring variables. In the parameter interface, press the up or down key to adjust the value, and press the left or right key to select the value. • Fault history menu: Press the left or right key to switch the fault history records in loop.
	Multi-function key	You can allocate different functions, such as command source switch, forward run and reverse run switch, or jog to this key.
	Run key	Press this key to start the AC drive when the operating panel control mode is used.
	Stop/Fault reset key	When the AC drive is running, press this key to stop it. When the AC drive is faulty, press this key to reset it.

Caution

Do not repair or modify the AC drive by yourself. In case of any fault that cannot be rectified, contact the agent or Inovance for technical support.

3.2 Basic Commissioning Process

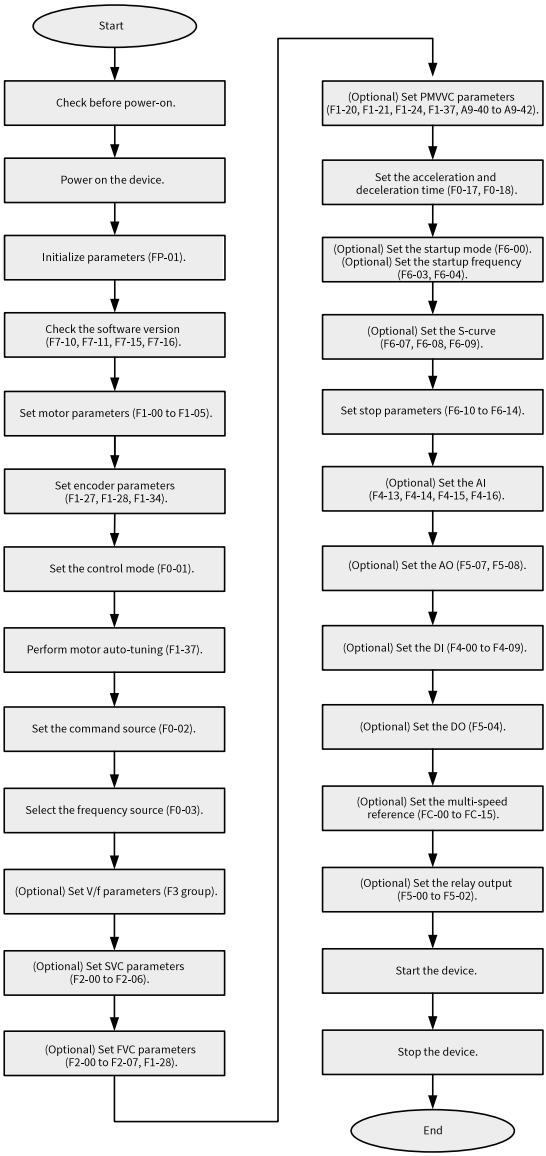

Figure 3-2 Commissioning process

Table 3–4 Commissioning process

No.	Step	Parameter
1	Check before power-on.	N/A
2	Power on the device.	N/A
3	Initialize parameters.	FP-01
4	Check the software version.	F7-10, F7-11, F7-15, F7-16
5	Set motor parameters.	F1-00 to F1-05 Note that you must set the motor type.
6	Set encoder parameters.	F1-27, F1-28, F1-34
7	Set the control mode.	F0-01
8	Perform motor auto-tuning.	F1-37
10	Set the command source.	F0-02
11	Select the frequency source.	F0-03
12	(Optional) Set V/f parameters.	F3 group
13	(Optional) Set SVC parameters.	F2-00 to F2-06
14	(Optional) Set FVC parameters.	F2-00 to F2-07, F1-28
15	(Optional) Set PMVVC parameters.	F0-01, F1-00, F1-24, F3-50 to F3-55
16	Set the acceleration and deceleration time.	F0-17, F0-18
17	(Optional) Set the startup mode.	F6-00
18	(Optional) Set the startup frequency.	F6-03, F6-04
19	(Optional) Set the S-curve.	F6-07, F6-08, F6-09
20	Set stop parameters.	F6-10 to F6-14
21	(Optional) Set the AI.	F4-13, F4-14, F4-15, F4-16
22	(Optional) Set the AO.	F5-07, F5-08
23	(Optional) Set the DI.	F4-00 to F4-09
24	(Optional) Set the DO.	F5-04
25	(Optional) Set the multi-speed reference.	FC-00 to FC-15
26	(Optional) Set the relay output.	F5-00, F5-01, F5-02
27	Start the device.	N/A
28	Stop the device.	N/A

3.3 Commissioning Process in V/f Control Mode

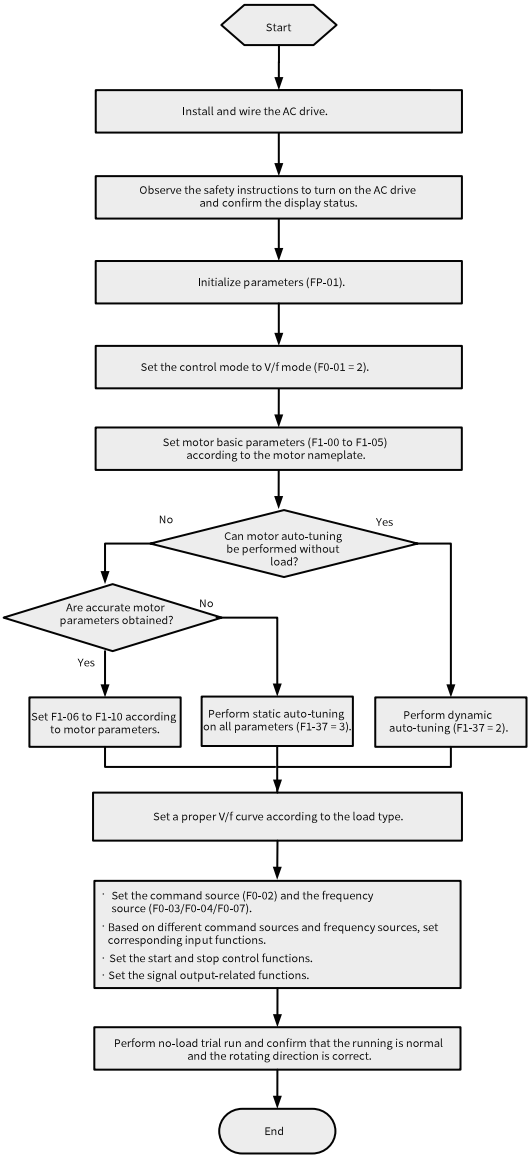

Figure 3-3 Commissioning process in V/f control mode

3.4 Commissioning Process in SVC/FVC Control Mode

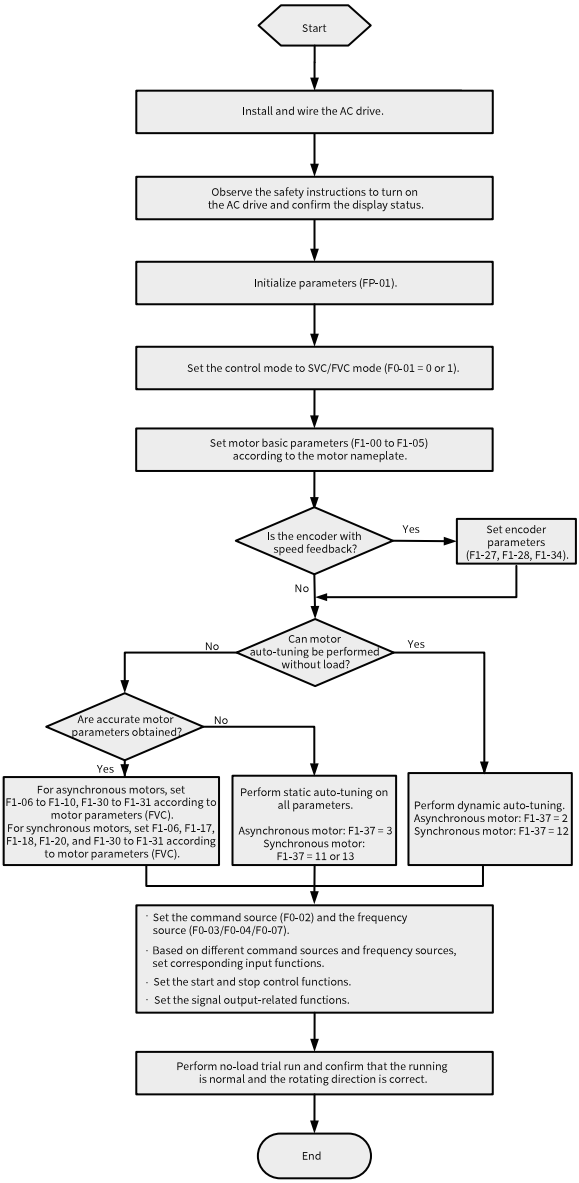

Figure 3-4 Commissioning process in SVC/FVC control mode

3.5 Commissioning Process in PMVVC Control Mode

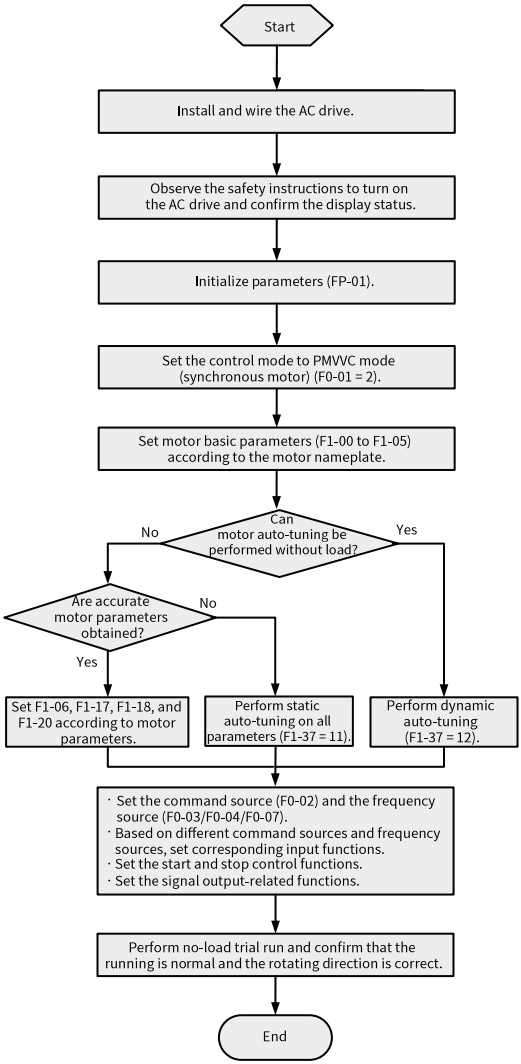

Figure 3-5 Commissioning process in PMVVC control mode

4 Troubleshooting

4.1 Common Faults and Diagnosis

4.1.1 Display of Alarms and Faults

When a fault occurs during running, the AC drive stops output immediately, the fault indicator becomes steady on, and the contact of the fault relay acts. The operating panel displays the fault code, such as E0021. The following figure shows the fault display screen.

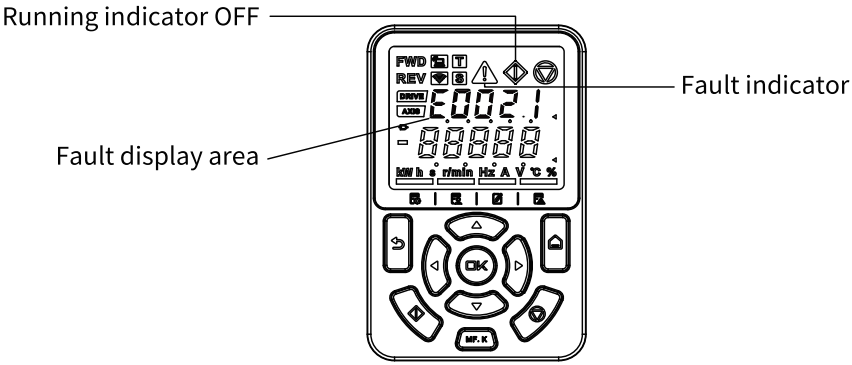

Figure 4-1 Display of faults

Caution

Do not repair or modify the AC drive by yourself. In case of any fault that cannot be rectified, contact the agent or Inovance for technical support.

4.1.2 Restart upon Faults

You can view the active fault code, active fault subcode, active fault information, active limit code, active limit subcode, active limit information, active alarm code, active alarm subcode, and active alarm information on the operating panel.

Table 4–1 Restart upon faults

Stage	Solution	Description
When a fault occurs	Fault record 1: View the active fault code, active fault subcode, active fault information, active limit code, active limit subcode, active limit information, active alarm code, active alarm subcode, and active alarm information on the operating panel.	View the information by using H0-00 to H0-53.
	Fault record 2: View the frequency, current, bus voltage, input terminal state, output terminal state, AC drive state, power-on duration, running duration, status word A, progression status word B, and command word upon the latest three faults on the operating panel.	View the information by using F9-14 to F9-44.
	Fault record 3: View the fault code, fault subcode, fault information, frequency, current, bus voltage, input terminal state, output terminal state, AC drive state, power-on duration, running duration, status word A, progression status word B, and command word upon the latest six faults on the operating panel.	View the information by using parameters in groups H3 to H8.
Before fault reset	Locate and rectify the fault cause based on the fault code displayed on the operating panel.	-

Stage	Solution	Description
During fault reset	1. Set any of F4-00 to F4-09 to 9 (fault reset).	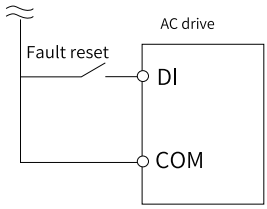
	2. Verify that F7-02 is set to 1 (default value), indicating that the STOP/RES key is available in any operating mode.	Press the STOP/RES key on the operating panel. 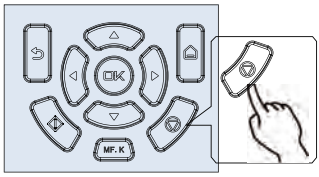
	3. Power off and then power on the AC drive for automatic reset. Disconnect the main circuit power supply and reconnect the power supply after the display on the operating panel disappears.	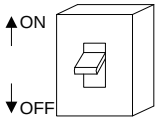
	4. Use a host controller for reset (for communication control mode). Verify that F0-02 is set to 2 (communication control mode) and write "7" to the communication address 2000H by using the host controller.	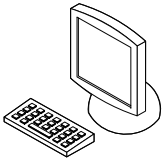

4.1.3 Common Troubleshooting

Table 4–2 Symptoms and troubleshooting

No.	Symptom	Possible Cause	Solution
1	The display does not work upon power-on.	The grid voltage is not input or too low.	Check the input power supply.
		The switched-mode power supply (SMPS) on the drive board of the AC drive is faulty.	Check whether the 24 V output voltage and 10 V output voltage on the control board are normal.
		The control board is disconnected from the drive board or the operating panel.	Re-connect the 8-conductor and 40-conductor flat cables.
		The pre-charge resistor of the AC drive is damaged.	Contact Inovance.
		The control board or operating panel is faulty.	
		The rectifier bridge is damaged.	
2	"–H–C–" is displayed upon power-on.	The connection between the drive board and the control board is poor.	Re-connect the 8-conductor and 28-conductor flat cables.
		Related components on the control board are damaged.	Contact Inovance.
		The motor or motor cable is shorted to ground.	
		The Hall device is faulty.	
		The grid voltage is too low.	
3	"E023.1" is displayed upon power-on.	The motor or output cable is shorted to ground.	Use a megger to measure the insulation resistance of the motor and motor cable.
		The AC drive is damaged.	Contact Inovance.

No.	Symptom	Possible Cause	Solution
4	The display is normal upon power-on. But after the AC drive starts to run, "–H–C–" is displayed and the AC drive stops immediately. 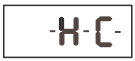	The fan is damaged, or locked-rotor occurs.	Replace the cooling fan.
		Wiring of any external control terminals is short-circuited.	Rectify the short circuit fault.
5	E14.00 (module overheat) is reported frequently.	The carrier frequency is set too high.	Reduce the carrier frequency (F0-15).
		The fan is damaged, or the air filter is blocked.	Replace the fan or clean the air filter.
		Components (thermistor or other devices) inside the AC drive are damaged.	Contact Inovance.
6	The motor does not rotate when the AC drive is running.	The AC drive and motor are incorrectly connected.	Double check the connection between the AC drive and motor.
		Related AC drive parameters (motor parameters) are set incorrectly.	Restore the AC drive to factory settings and re-set the following parameters correctly:
			Encoder parameters and rated motor specifications (such as rated motor frequency and rated motor speed)
			F0-01 and F0-02
			F3-01 for heavy-load start in V/f control mode
		The connection between the drive board and the control board is poor.	Re-connect the cables and ensure secure wiring.
		The drive board is faulty.	Contact Inovance.

No.	Symptom	Possible Cause	Solution
7	DI terminals are inactive.	Related parameters are set incorrectly.	Check and set parameters in group F4 again.
		External signal transmission errors occur.	Re-connect external signal cables.
		The jumper across the OP and +24 V terminals becomes loose.	Check and ensure secure connection of the jumper across OP and +24 V.
		The control board is faulty.	Contact Inovance.
8	In FVC mode, the motor cannot speed up.	The encoder is faulty.	Replace the encoder and double check the wiring.
		The encoder wiring is incorrect or in poor contact.	Reconnect the encoder to ensure good contact.
		The PG card is faulty.	Replace the PG card.
		The drive board is faulty.	Contact Inovance.
9	The AC drive reports overcurrent and overvoltage frequently.	Motor parameters are incorrectly set.	Adjust motor parameters or perform motor auto-tuning again.
		The acceleration/ deceleration time is improper.	Set acceleration/deceleration time properly.
		The load fluctuates.	Contact Inovance.
10	E017.1 is reported upon power-on or during running.	The soft start contactor is not closed.	Check whether the contactor cable is loose.
			Check whether the contactor is faulty.
			Check whether the 24 V power supply of the contactor is faulty.
			Contact Inovance.
11	The motor coasts to stop, or braking is disabled during deceleration or deceleration to stop.	The encoder is disconnected, or overvoltage stall protection is enabled.	Check the encoder wiring in FVC mode (F0-01 = 1).
			If a braking resistor is configured, set F3-23 to 0 to disable overvoltage stall suppression.

4.1.4 Troubleshooting During Trial Run in Different Control Modes

- SVC mode (F0-01 = 0, default setting)

In this mode, the drive controls the speed and torque of motor in scenarios without an encoder for speed feedback. Motor auto-tuning is required to obtain motor-related parameters.

Table 4–3 Troubleshooting in SVC mode

Problem	Solution
Overload or overcurrent reported during motor startup	Set motor parameters F1-01 to F1-05 according to the motor nameplate. Perform motor auto-tuning (by setting F1-37). Dynamic auto-tuning on all parameters of the motor is preferred when possible.
Slow torque or speed response and motor vibration at frequencies below 5 Hz	In the case of slow motor torque or speed response, increase the value of F2-00 (speed loop proportional gain) by increments of 10 or decrease the value of F2-01 (speed loop integral time) by decrements of 0.05. In the case of motor vibration, decrease the value of F2-00 and increase the value of F2-01.
Slow torque or speed response and motor vibration at frequencies above 5 Hz	In the case of slow motor torque or speed response, increase the value of F2-03 (speed loop proportional gain) by increments of 10 or decrease the value of F2-04 (speed loop integral time) by decrements of 0.05. In the case of motor vibration, decrease the value of F2-03 and increase the value of F2-04.
Low speed accuracy	In the case of excessive speed deviation during with-load operation, increase the value of F2-06 (vector control slip compensation gain) by increments of 10%.
Large speed fluctuation	In the case of abnormal motor speed fluctuation, increase the value of A9-05 (speed filter time) by increments of 0.001s.
Loud motor noise	Increase the value of F0-15 (carrier frequency) by increments of 1.0 kHz. Note that an increase in the carrier frequency will result in an increase in the leakage current of the motor.
Insufficient motor torque	Check whether the torque upper limit is set too low. If yes, increase the value of F2-10 (torque upper limit) in speed control mode or increase the torque reference in torque control mode.

- FVC mode (F0-01 = 1)
  This mode is applicable to scenarios with an encoder for speed feedback. In this mode, you need to set the encoder pulses per revolution, encoder type, and encoder direction correctly and perform auto-tuning on motor parameters.

Table 4–4 Troubleshooting in FVC mode

Problem	Solution
Overload or overcurrent reported during motor startup	Set the encoder pulses per revolution, encoder type, and encoder direction correctly.
Overload or overcurrent reported during motor rotation	Set motor parameters F1-01 to F1-05 according to the motor nameplate. Perform motor auto-tuning (by setting F1-37). Dynamic auto-tuning on all parameters of the motor is preferred when possible.
Slow torque or speed response and motor vibration at frequencies below 5 Hz	In the case of slow motor torque or speed response, increase the value of F2-00 (speed loop proportional gain) by increments of 10 or decrease the value of F2-01 (speed loop integral time) by decrements of 0.05. In the case of motor vibration, decrease the values of F2-00 and F2-01.
Slow torque or speed response and motor vibration at frequencies above 5 Hz	In the case of slow motor torque or speed response, increase the value of F2-03 (speed loop proportional gain) by increments of 10 or decrease the value of F2-04 (speed loop integral time) by decrements of 0.05. In the case of motor vibration, decrease the values of F2-03 and F2-04.
Large speed fluctuation	In the case of abnormal motor speed fluctuation, increase the value of F2-07 (speed filter time) by increments of 0.001s.
Loud motor noise	Increase the value of F0-15 (carrier frequency) by increments of 1.0 kHz. Note that an increase in the carrier frequency will result in an increase in the leakage current of the motor.
Insufficient motor torque	Check whether the torque upper limit is set too low. If yes, increase the value of F2-10 (torque upper limit) in speed control mode or increase the torque reference in torque control mode.

- V/f control mode (F0-01 = 2)
  This mode is applicable to scenarios without an encoder for speed feedback. You only need to set rated motor voltage and rated motor frequency correctly.

Table 4–5 Troubleshooting in V/f control mode

Problem	Solution
Motor oscillation during running	Decrease the value of F3-11 (V/f oscillation suppression gain) by increments of 5. The minimum value is 5.
Overcurrent during high-power startup	Decrease the value of F3-01 (torque boost) by increments of 0.5%.
High current during running	Set F1-02 (rated motor voltage) and F1-04 (rated motor frequency) correctly. Decrease the value of F3-01 (torque boost) by increments of 0.5%.

Problem	Solution
Loud motor noise	Increase the value of F0-15 (carrier frequency) by increments of 1.0 kHz. Note that an increase in the carrier frequency will result in an increase in the leakage current of the motor.
Overvoltage reported during deceleration or sudden removal of heavy loads	Verify that overvoltage stall suppression (F3-23) is enabled. Increase the value of F3-24/F3-25 (overvoltage stall suppression gain, 30 by default) by increments of 10 (the maximum value is 100). Decrease the value of F3-22 (overvoltage stall suppression action voltage, 770 V by default) by increments of 10 V (the minimum value is 700 V).
Overcurrent reported during acceleration or sudden application of heavy loads	Increase the value of F3-20 (overcurrent stall suppression gain, 20 by default) by increments of 10 (the maximum value is 100). Decrease the value of F3-18 (overcurrent stall suppression action current, 150% by default) by decrements of 10% (the minimum value is 50%).

4.2 List of Fault Codes

The following faults may occur during the use of the AC drive. Troubleshoot the faults according to the solutions described in the following table.

Fault Code	Fault Name	Possible Cause	Countermeasures
E002.1	Hardware overcurrent	The instantaneous output current exceeds 2.5*1.414 times the rated current of the AC drive. For more causes, connect to the AC drive from the mobile App through Wi-Fi to make a self-diagnosis, which can help users quickly locate the fault.	
		Output grounding	Check for output ground points and measure the ground impedance by segment by using a megohmmeter.
		Inter-phase short-circuit	1. Check whether the output side is short circuited. 2. Check whether the power cable is short circuited. 3. Check whether motor resistance is symmetrical.
		No parameter auto-tuning in vector control mode	Set motor parameters correctly and perform auto-tuning again.
		Encoder interference or wire breakage	1. Check whether the encoder cable is connected securely. 2. Check whether the encoder cable is grounded at the AC drive side. 3. Ground the motor enclosure. 4. Replace the encoder and the encoder cable.
		Output phase loss	1. Check whether the cables are properly connected. 2. If there is a contactor at the output side, check whether the contactor opening logic and the contactor contact are normal.
		Current detection exception	Contact after-sales service.
		V/f control acceleration/deceleration time too short	1. Enable the overcurrent suppression function. 2. Increase the acceleration/deceleration time.
		Encoder phase sequence error	If the encoder direction and the motor running direction are opposite, change the encoder direction.
		Model setting error	Set the AC drive model correctly (FF-01).

Fault Code	Fault Name	Possible Cause	Countermeasures
E002.2	Software overcurrent	The software overcurrent threshold is defined by FF-18. The default value is 100%, indicating that the threshold does not take effect. 100% is equivalent to the full range of current sampling (2.2 times the rated current of the AC drive multiplied by 1.414). For more causes, connect to the AC drive from the mobile App through Wi-Fi to make a self-diagnosis, which can help users quickly locate the fault.	
		Output grounding	Check for output short-to-ground and measure the ground impedance by segment by using a megohmmeter.
		Inter-phase short-circuit	1. Check whether the output side is short circuited. 2. Check whether the power cable is short circuited. 3. Check whether motor resistance is symmetrical.
		No parameter auto-tuning in vector control mode	Set motor parameters correctly and perform auto-tuning again.
		Encoder interference or wire breakage	1. Check whether the encoder cable is connected securely. 2. Check whether the encoder cable is grounded at the AC drive side. 3. Ground the motor enclosure. 4. Replace the encoder and the encoder cable.
		Output phase loss	1. Check whether the cables are properly connected. 2. If there is a contactor at the output side, check whether the contactor opening logic and the contactor contact are normal.
		Current detection exception	Contact after-sales service.
		V/f control acceleration/deceleration time too short	1. Enable the overcurrent suppression function. 2. Increase the acceleration/deceleration time.
		Encoder phase sequence error	If the encoder direction and the motor running direction are opposite, change the encoder direction.
		Model setting error	Set the AC drive model correctly (FF-01).

Fault Code	Fault Name	Possible Cause	Countermeasures
E005.1	Bus overvoltage	The overvoltage threshold is defined by A5-09 (unit: V), which only allows slight modification. For more causes, connect to the AC drive from the mobile App through Wi-Fi to make a self-diagnosis, which can help users quickly locate the fault.	
		Output grounding	1. Check whether the output side is short circuited. 2. Check whether the power cable is short circuited. 3. Check whether motor resistance is symmetrical.
		Encoder interference/wire breakage	1. Check whether the encoder cable is connected securely. 2. Check whether the encoder cable is grounded at the AC drive side. 3. Ground the motor enclosure. 4. Replace the encoder and the encoder cable.
		Power generation during motor deceleration	Enable overvoltage suppression if there is no active load (gravity load, tension load, and so on). Connect a braking resistor if possible. Set F3-19 in V/f control mode or bit1 (VdcMax enable) of AB-25 (parameter of motor 1) in vector control mode.
		Fault reaction upon runaway of synchronous motor	Shorten the overspeed protection time by setting F9-67 and F9-68 for the synchronous motor, which can effectively prevent the back EMF from exceeding the overvoltage threshold of the AC drive after runaway.
		Braking resistor selection error	Make sure that the power of the braking module is not lower than the power of the AC drive, that the continuous load is 0.8 times the motor power, and that the short-term overload can reach 1.5 times the motor power.
		Braking resistor phase loss	Check that the braking resistor is properly connected.
		Overshoot upon speed reach in vector control mode	If the speed loop overshoot is severe, configure the RFG with rounding time and acceleration feedforward to improve the speed loop follow-up performance.
		V/f oscillation	Enable the oscillation suppression function and optimize the V/f oscillation suppression coefficient.
		AC drive model setting error	Set the AC drive model correctly.
E008.1	Frequent pre-charge	Pre-charge circuit exception (the action of the pre-charge contactor can be heard frequently)	Contact after-sales service because frequent pre-charge can cause overload of the pre-charge circuit.

Fault Code	Fault Name	Possible Cause	Countermeasures
E009.1	Undervoltage	The undervoltage threshold is defined by A5-06. For more causes, connect to the AC drive from the mobile App through Wi-Fi to make a self-diagnosis, which can help users quickly locate the fault.	
		Instantaneous power failure	Enable overvoltage suppression if there is no active load (gravity load, tension load, and so on). Set F9-59 in V/f control mode or bit0 (VdcMin enable) of AB-25 (parameter of motor 1) in vector control mode.
		AC drive input voltage out of range	Adjust the input voltage to the normal range.
		Input phase loss and large output power	Make sure the input grid is normal.
		High undervoltage threshold	Lower the undervoltage threshold as appropriate.
		AC drive model setting error	Set the AC drive model correctly.
		Rectifier bridge, pre-charge resistor, drive board, or control board exception	Contact the technical support personnel.
E009.3	Pre-charge fault	Failure to power on the bus long after the motor is started in the state of undervoltage	Start the motor after the bus becomes stable after power-on.
E010.1	AC drive overload	For more causes, connect to the AC drive from the mobile App through Wi-Fi to make a self-diagnosis, which can help users quickly locate the fault.	
		Excessive load or locked-rotor	Reduce the load and check the motor and mechanical conditions.
		High carrier frequency	Decrease the carrier frequency.
		Low bus voltage during high speed running with heavy load	1. Increase the input voltage of the grid. 2. Enable the overmodulation function.
		Derating at low frequency due to long-term running below 5 Hz	Avoid running the motor with heavy load at a low speed for a long time, or select an AC drive with higher power.
		Output grounding	Check for output ground points.
		Output phase loss	Check for output phase loss.
		Motor parameter error	Check the motor nameplate parameters and perform auto-tuning correctly.
		Flying start not applied when the motor is started during rotation	Enable flying start by setting F6-00 (parameter of motor 1).
		Encoder direction error	Change the A/B phase sequence of the encoder (F1-30).
		AC drive model setting error	Set the AC drive model correctly.
		Inadequate power rating of the AC drive	Replace the AC drive with one of higher power rating.
E010.3	AC drive pre-overload	AC drive overload ratio reaching 80%	Same as E010.1.
			Change the pre-overload response level by setting parameters in group H1 because pre-overload is not reported by default.

Fault Code	Fault Name	Possible Cause	Countermeasures
E011.1	Motor overload	Inappropriate F9-01 (motor overload protection) setting	Set F9-01 correctly.
		Inadequate power rating of the motor	Select an appropriate motor.
		Brake error	Check that the brake can be opened properly.
		Excessive load or locked-rotor	Reduce the load and check the motor and mechanical conditions.
E011.2	Motor pre-overload	Motor overload ratio reaching the value of F9-02	Same as E011.1.
			Change the motor pre-overload coefficient (F9-02).
			Change the exception response level by setting parameters in group H1 because motor pre-overload is not reported by default.
E012.1	Input phase loss	Three-phase input power input phase loss	Check that the power input is normal.
		Three-phase grid imbalance	An unbalanced grid causes the bus voltage to fluctuate, which might damage the bus capacitors over long-term running. Make sure the input grid is symmetrical.
		Drive board, surge protector, main control board, or rectifier bridge exception	Contact the technical support personnel.
E013.1	Output phase loss	Motor phase loss	Check whether open circuit occurs on the motor.
E013.2		Exception of the cable connecting the AC drive and the motor	Check that the wiring is secure.
E013.3		Unbalanced three-phase output of the AC drive during motor running	Check whether the motor three-phase winding is normal. If not, eliminate the fault.
E013.4		Drive board or IGBT exception	Contact the technical support personnel.
E014.1	IGBT overheat	Over-high ambient temperature	Reduce the ambient temperature.
		Air filter blocked	Clean the air filter.
		Fan damage	Replace the fan.
		IGBT thermistor damage	Replace the thermistor.
		IGBT damage	Replace the IGBT.
E014.2	Module pre-overtemperature	Module temperature exceeding the pre-overtemperature threshold (obtained by subtracting the pre-overtemperature margin defined by BF-14 from the overtemperature threshold)	Same as E014.1.
			Change the exception response level by setting parameters in group H1 because module pre-overtemperature is not reported by default.
E015.1	External device fault	External fault input through the multi-function DI (NO)	Eliminate the external fault, ensure that the mechanical condition allows restart (F8-18), and reset the operation.
E015.2		External fault input through the multi-functional DI (NC)	Eliminate the external fault, ensure that the mechanical condition allows restart (F8-18), and reset the operation.
E017.1	Contactor fault	Drive board and power supply exception	Replace the drive board or power supply board.
		Contactor exception	Replace the contactor.
		Surge protector exception	Replace the surge protector.

Fault Code	Fault Name	Possible Cause	Countermeasures
E018.1	Current detection fault	Hall component exception	Replace the hall component.
		AC drive stopped while synchronous motor is rotating at high speed	Disable zero drift detection by setting bit07 of BF-07.
		Drive board exception	Replace the drive board.
E019.1	Auto-tuning timeout	Motor parameter setting exception or AC drive model setting exception	Set the motor and AC drive parameters correctly.
E019.2	Auto-tuning interrup tion	Auto-tuning interrupted by a stop command	Wait until auto-tuning is completed. The motor will stop automatically.
E019.3	Overcur rent during auto-tuning	Current out-of-control during auto-tuning	Set the motor parameters and AC drive model correctly.
			Contact the technical support personnel.
E019.4	Auto-tuning back EMF exception	Basic motor parameter setting error	Set the motor nameplate parameters and AC drive model correctly.
		Oscillation suppression failure during auto-tuning of back EMF	Adjust the oscillation suppression parameter.
E019.5	Motor type setting error	Incorrect motor type	Set the motor type correctly.
E019.7	No-load current auto-tuning error	No-load current out-of-range during motor auto-tuning	Set the motor nameplate parameters and AC drive model correctly.
E020.1	Encoder hardware wire breakage detection	Encoder hardware feedback signal exception	1. Check whether the correct PG card is selected. 2. Check whether the wiring is normal. 3. Check whether the encoder is normal. 4. Check whether the encoder DIP switch is appropriate. 5. Check whether the encoder parameters are set correctly.
			Set F1-36 to a non-zero value, and set bit02 of AA-30 to enable PG fault detection. The fault is reported only in FVC mode.
E020.2	Encoder PPR error	Inconsistency between encoder feedback speed and actual motor speed	Check whether the ABZ encoder PPR or number of pole pairs of resolver is incorrect.
E020.3	No encoder feedback	No encoder feedback speed	1. Check whether the correct PG card is selected. 2. Check whether the wiring is normal. 3. Check whether the encoder is normal. 4. Check whether the encoder DIP switch is appropriate. 5. Check whether the encoder parameters are set correctly.

Fault Code	Fault Name	Possible Cause	Countermeasures
E020.4	Encoder direction fault	Encoder direction opposite to motor rotation direction	Set F1-30 to switch the encoder direction.
E020.5	Large encoder feedback speed fluctuation	Sudden change of the encoder feedback speed (which will introduce control fluctuations, and in severe cases, lead to control divergence and overcurrent) (Detection of this fault is disabled by default.)	1. Check whether the correct PG card is selected. 2. Check whether the wiring is normal. 3. Check whether the encoder is normal. 4. Check whether the encoder DIP switch is appropriate. 5. Check whether the encoder parameters are set correctly.
			1. Check whether the encoder shield layer is grounded at the AC drive side. 2. Check whether the motor enclosure is grounded. 3. Check whether the encoder cable is far away from the power cables. 4. Install a magnetic ring on the encoder cable. 5. Use twisted pair cable with dense metal mesh shield layer as the encoder cable. 6. Use as few adapters as possible.
			Set bit01 of A9-09 to enable software detection of wire breakage, set A9-08 to specify the encoder wire breakage software detection coefficient, and set bit02 of A9-09 to remove encoder feedback glitches.
E020.8	ABZ encoder Z signal loss	ABZ encoder Z signal loss	This fault is reported only during self-check when the synchronous motor uses the ABZ encoder in FVC mode.
E020.9	Encoder pulse interfer ence	Encoder feedback speed fluctuation exception	This fault is reported only during self-check of the encoder.
E021.1 E021.2 E021.3 E021.4	EEPROM read-write fault	EEPROM read-write exception	For parameters written through communication, check the RAM addresses and address mapping. For details, see section 1.2 "Parameter Communication Addresses" in the communication guide of the MD520 series general-purpose AC drives. If the EEPROM chip is damaged, contact the manufacturer to replace the main control board.
E021.5		EEPROM internal cache overrun	For parameters written through communication, check for frequent writes.
E023.1	Short-to-ground	Motor short-to-ground	Check the connector adapters and measure the ground impedance by using a megohmmeter. If the problem persists, replace the cable or motor.
		Self-check during motor running (not an issue any more in 20s after the asynchronous motor stops)	Do not run the motor until the cause of the fault is located.
		IGBT short circuit (extremely low probability)	Replace the motor and perform static self-check again.

Fault Code	Fault Name	Possible Cause	Countermeasures
E026.1	Accumulative running duration reach	Accumulative running duration reaching setpoint	Clear the record through parameter initialization.
E027.1 E027.2	User-defined fault	Signal of user-defined fault input through the multi-function DI terminal	Eliminate the external fault, ensure that the mechanical condition allows restart (F8-18), and reset the operation.
		Signal of user-defined fault input through the virtual I/O	
		Signal of user-defined fault input through the connector	
E027.3 E027.4		Signal of user-defined fault input through the connector	Check settings of connector parameters (H2-06 to H2-07). Eliminate the external fault, ensure that the mechanical condition allows restart (F8-18), and reset the operation.
L028.1	User-defined alarm	Signal of user-defined fault input through the connector	Check settings of connector parameters (H2-08 to H2-11).
L 028.2			
L 028.3			
L 028.4			
E029.1	Accumulative power-on duration reach	Accumulative power-on duration reaching the setpoint	Clear the record through parameter initialization.
E031.1	PID feedback loss during running	PID feedback less than the value of FA-26	Check the PID feedback signal or set FA-26 properly.
E032.1	Parameter exception	Parameter reset exception	Reset FP-01. If the fault persists, contact the technical support personnel.
E032.2		Parameter backup exception	Back up all parameters again. If the fault cannot be reset, contact the technical support personnel.
E032.3		Parameter power-off exception	Check whether the power is off and whether the bus capacitor discharges too fast.
E032.4		Parameter setting exception	Check whether the related parameters are set as required, especially parameters with setting limits that are associated with other parameters.
E032.6		Parameter power-on check exception	Check the value of U2-09. If the value is normnal, contact the technical support personnel.

Fault Code	Fault Name	Possible Cause	Countermeasures
E040.1	Pulse-by-pulse current limit fault	This fault is reported only for asynchronous motors in V/f control mode. For more causes, connect to the AC drive from the mobile App through Wi-Fi to make a self-diagnosis, which can help users quickly locate the fault.	
		Excessive load or locked-rotor	Reduce the load and check the motor and mechanical conditions.
		Output short-to-ground	Perform self-check to check for the short-to-ground point.
		Motor turn-to-turn short circuit	Perform self-check, measure whether the resistance of the output terminal is symmetrical with a multimeter, and replace the motor if turn-to-turn short circuit is determined.
		Motor nameplate parameter error	Set the motor parameters correctly.
		Output phase loss	Perform self-check and connect the motor properly.
		V/f oscillation	Enable V/f oscillation suppression and adjust the oscillation suppression coefficient.
		Inadequate power rating of the AC drive	Replace the AC drive with one of higher power rating.
E042.1	Excessive speed deviation	Incorrect setting of encoder parameters	Set encoder parameters correctly.
		Motor auto-tuning not performed	Perform motor auto-tuning.
		Excessive load	Ensure that a proper load is connected.
		Encoder direction fault	Set the encoder direction correctly.
		Inappropriate setting of F9-69 and F9-70	Set the parameters correctly based on actual conditions.
E043.1	Motor overspeed	For more causes, connect to the AC drive from the mobile App through Wi-Fi to make a self-diagnosis, which can help users quickly locate the fault.	
		Incorrect setting of encoder parameters	Set encoder parameters correctly.
		Motor auto-tuning not performed	Perform motor auto-tuning.
		Runaway caused by incorrect encoder zero point angle of synchronous motor	Check whether the encoder zero point angle obtained by auto-tuning is accurate and whether the encoder connection is loose.
		Inappropriate setting of F9-67 and F9-68	Set the parameters correctly based on actual conditions.
E045.1	Motor overtemperature	Loose connection of temperature sensor	Check the wiring of the temperature sensor.
		Overhigh motor temperature	Decrease the carrier frequency or take other measures to cool the motor.
		Excessively low motor overtemperature protection threshold (F9-57 or F9-76)	Raise the motor overtemperature protection threshold to between 90°C to 100°C.
E045.2		Loose connection of temperature sensor	Check the wiring of the temperature sensor.
		Overhigh motor temperature	Decrease the carrier frequency or take other measures to cool the motor.
		Excessively low motor pre-overtemperature protection threshold (F9-58 or F9-77)	Raise the motor pre-overtemperature protection threshold.

Fault Code	Fault Name	Possible Cause	Countermeasures
E047.2	STO fault	STO1 and STO2 signal disconnection	Check the wiring of STO1 and STO2.
E047.3		STO circuit undervoltage or overvoltage	Contact the technical support personnel.
E047.4		STO circuit input subsystem exception	Contact the technical support personnel.
E047.5		STO blocking output chip exception	Contact the technical support personnel.
E051.1	Pole position auto-tuning error	Check the motor for output phase loss.	Connect the motor output correctly and ensure that the output contactor is closed.
E055.1	Slave error in master-slave control	Slave fault	Troubleshoot the problem based on the slave fault code.
E056.2	IGBT U- short circuit	IGBT monitoring VCE signal exception	Contact after-sales service.
E056.3	IGBT U+ short circuit	IGBT monitoring VCE signal exception	Contact after-sales service.
E056.4	IGBT V- short circuit	IGBT monitoring VCE signal exception	Contact after-sales service.
E056.5	IGBT V+ short circuit	IGBT monitoring VCE signal exception	Contact after-sales service.
E056.9	Output phase loss	Motor output phase loss	Make sure the motor is connected properly and the output contactor is normal.
E057.1	U phase upper bridge or V phase lower bridge IGBT continuity failure	IGBT open circuit	Contact after-sales service.
E057.2	U phase lower bridge or V phase upper bridge IGBT continuity failure	IGBT open circuit	Contact after-sales service.

Fault Code	Fault Name	Possible Cause	Countermeasures
E057.3	V phase upper bridge or W phase lower bridge IGBT continuity failure	IGBT open circuit	Contact after-sales service.
E057.4	V phase lower bridge or W phase upper bridge IGBT continuity failure	IGBT open circuit	Contact after-sales service.
E057.5	W phase upper bridge or U phase lower bridge IGBT continuity failure	IGBT open circuit	Contact after-sales service.
E057.6	W phase lower bridge or U phase upper bridge IGBT continuity failure	IGBT open circuit	Contact after-sales service.
E057.7	UV output end short circuit	Inter-phase output short circuit	Check for inter-phase short circuit.
E057.8	VW output end short circuit	Inter-phase output short circuit	Check for inter-phase short circuit.
E057.9	WU output end short circuit	Inter-phase output short circuit	Check for inter-phase short circuit.
E058.1	Module U phase current sensor inversely installed	Current sampling sensor exception	Contact after-sales service.

Fault Code	Fault Name	Possible Cause	Countermeasures
E058.2	Module V phase current sensor inversely installed	Current sampling sensor exception	Contact after-sales service.
E058.3	Module W phase current sensor inversely installed	Current sampling sensor exception	Contact after-sales service.
E058.4	Module UV phase sensor incorrectly inserted	Current sampling sensor exception	Contact after-sales service.
E058.5	Module VW phase sensor incorrectly inserted	Current sampling sensor exception	Contact after-sales service.
E058.6	Module WU phase sensor incorrectly inserted	Current sampling sensor exception	Contact after-sales service.
E059.1	UV phase imbalance	Motor turn-to-turn short circuit	Replace the motor and then perform self-check to confirm the cause.
E059.2	VW phase imbalance	Motor turn-to-turn short circuit	Replace the motor and then perform self-check to confirm the cause.
E059.3	WU phase imbalance	Motor turn-to-turn short circuit	Replace the motor and then perform self-check to confirm the cause.
E061.1	Braking unit overload	Overhigh power of braking resistor (resistance too small)	Use a braking resistor with higher resistance.
E062.2	Braking transistor shoot-through	Braking module exception	Contact the technical support personnel.
		Braking resistor short circuit	Check whether the braking resistor is short circuited or damaged. If yes, replace it.
E062.3	Braking transistor overcurrent	Incorrect connection of braking resistor	Check whether the braking resistor is properly connected and whether the braking unit is normal.

Fault Code	Fault Name	Possible Cause	Countermeasures
E093.1	Motor rotor locked	The locked-rotor detection threshold and detection time are defined by AA-31 and AA-32 and protection against locked rotor is enabled by setting bit05 of AA-30. For more causes, connect to the AC drive from the mobile App through Wi-Fi to make a self-diagnosis.	
		Excessive load or brake exception	Ensure that the motor load is within a reasonable range.
		Low torque limit/current limit	Set the torque limit as appropriate.
		Auto-tuning not performed	Perform auto-tuning before running.
		AC drive model setting error	Set the AC drive model correctly.
E093.2	Motor stall	The motor stall detection threshold and detection time are defined by AA-33 and AA-34 and protection against motor stall is enabled by setting bit04 of AA-30. For more causes, connect to the AC drive from the mobile App through Wi-Fi to make a self-diagnosis.	
		Encoder interference/wire breakage	Check the encoder for interference.
		Encoder PPR error or loose connection	Check whether the encoder is connected reliably.
		Auto-tuning not performed	Set the rated parameters of the motor correctly, and perform dynamic auto-tuning if possible.
		AC drive model error	Set the AC drive model correctly.
E093.4	Current control exception	The current control exception detection threshold and detection time are defined by AA-35 and AA-36 and protection against current control exception is enabled by setting bit03 of AA-30. For more causes, connect to the AC drive from the mobile App through Wi-Fi to make a self-diagnosis.	
		Output phase loss	Check the motor for phase loss.
		Encoder interference or encoder wire breakage	Check whether the encoder is normal.
		Sudden and large drop in bus voltage	Keep the grid voltage stable.
		Auto-tuning not performed	Input motor parameters correctly and perform auto-tuning.
E094.1	Inconsistency between calculated and set numbers of pole pairs	Incorrect setting of the number of motor pole pairs	Set A9-02 only when the number of motor pole pairs exceeds 12.
E094.2	Motor power, voltage, and current matching error	Motor the power, voltage, and current mismatch	Set the motor parameters correctly.
E094.3	No-load current range error	Incorrect motor no-load current range	Check the motor nameplate parameters and ensure correct model setting of the AC drive.
E094.4	Inconsistency between Lm I0 and rated voltage	Inconsistency with rated voltage caused by separate modification of no-load current or mutual inductance	Set motor nameplate parameters correctly and perform auto-tuning.

Fault Code	Fault Name	Possible Cause	Countermeasures
E094.5	Rotor resistance range exception	Rotor resistance range out-of-range	Check whether the motor is rotating during auto-tuning.
			Check whether the motor nameplate parameters and AC drive model setting are correct.
E094.7	Mismatch between the numbers of pole pairs of the resolver and synchro nous motor	Incorrect number of resolver pole pairs of synchronous motor	Ensure that the number of pole pairs of the synchronous motor is divisible by the number of resolver pole pairs.
E159.1	Auto reset failure	Auto reset disabled	Check H2-20 to H2-39 to see whether auto reset is disabled.
E160.1	Modbus communica tion fault	Modbus communication timeout	Check whether the RS-485 communication cable is correctly connected.
			Check whether the setting of FD-04 and the PLC communication cycle are proper.
E161.1	CANopen communica tion fault	CANopen communication timeout	Check whether the CAN communication cable is correctly connected.
			Check parameters FD-15 to FD-17 for further action.
E161.2		Inconsistency between PDO mapping configured for CANopen and the actual mapping	Check the PDO mapping of parameters in group AF.
E162.1	CANlink communica tion fault	CANlink heartbeat timeout	Check whether the CAN communication cable is correctly connected.
			Check parameters FD-15 to FD-17 for further action.
E162.2		CANlink station number conflict	Modify the CAN station numbers by using FD-13.
E164.1	Expansion card fault	Expansion card fault	Check communication of the expansion card.
E174.1	Wire breakage	HDI1 wire breakage	Check HDI wiring.
E174.3		AI1 wire breakage	Check AI1 wiring.
E174.4		AI2 wire breakage	Check AI2 wiring.
E174.5		AI3 wire breakage	Check AI3 wiring.

4.3 List of Fault Attributes

The fault attribute table describes the fault name, panel display, default fault protection action, fault action range, whether reset is allowed, and whether attributes are modified when the main fault code is modified by using F9-47 to F9-50.

This series of AC drives allow you to modify the fault protection actions of the main fault codes by using F9-47 to F9-50 or modify the fault protection action of an individual fault by using parameters in group H1.

Default Fault Protection Action indicates the default protection action of a fault for which the fault action is not defined by F9-47 to F9-50 and parameters in group H1.

Fault Action Range indicates available fault actions when a fault is modified by using parameters in group H1.

The fault action range values are described as follows:

0. Coast to stop

1: Decelerate to stop

2: Continue to run (with speed limit)

3: Run with power limit

4: Run with current limit

5: Ignore

Reset Allowed or Not specifies whether a fault allows reset.

The symbols in the Reset Allowed or Not column are described as follows:

☆: The fault allows reset.

★: The fault does not allow reset.

Modified with Main Code or Not specifies whether the fault protection action of the subcode is modified accordingly when the fault protection action of the main fault code is modified by using F9-47 to F9-50.

The symbols in the Modified with Main Code or Not column are described as follows:

○: The fault protection action of the fault is modified accordingly when that of the main fault code is modified.

●: The fault protection action of the fault is not modified accordingly when that of the main fault code is modified.

Table 4–6 List of Fault Attributes

Panel Display	Fault Name	Default Fault Protection Action	Fault Action Range	Reset Allowed or Not	Modified with Main Code or Not
E002.1	Hardware overcurrent	0	0	☆	○
E002.2	Software overcurrent	0	0	☆	○
E005.1	Overvoltage	0	0	☆	○

Panel Display	Fault Name	Default Fault Protection Action	Fault Action Range	Reset Allowed or Not	Modified with Main Code or Not
E008.1	Frequent contactor action	0	0	☆	○
E009.1	Undervoltage	0	0	☆	○
E009.3	Pre-charge exception	0	0	☆	○
E010.1	AC drive overload	0	0	☆	○
E010.3	AC drive pre-overload	5	2 to 5	☆	○
E011.1	Motor overload	0	0 to 5	☆	○
E011.2	Motor pre-overload	Unchangeable by default	2 to 5	☆	●
E012.1	Input phase loss	0	0 to 5	☆	○
E013.1	U phase output phase loss	0	0 to 4	☆	○
E013.2	V phase output phase loss	0	0 to 4	☆	○
E013.3	W phase output phase loss	0	0 to 4	☆	○
E014.1	Module overtemperature	0	0	☆	○
E014.2	Module pre-overtemperature	Unchangeable by default	2 to 5	☆	○
E015.1	External fault 1	0	0 to 4	☆	○
E015.2	External fault 2	0	0 to 4	☆	○
E017.1	Pre-charge circuit exception	0	0 to 5	☆	○
E018.1	Current sampling exception	0	0	☆	○
E019.1	Auto-tuning timeout	0	0	☆	○
E019.2	Auto-tuning interruption	0	0	☆	○
E019.3	Overcurrent during auto-tuning	0	0	☆	○
E019.4	Back EMF auto-tuning exception	0	0	☆	○
E019.5	Motor type error	0	0	☆	○

Panel Display	Fault Name	Default Fault Protection Action	Fault Action Range	Reset Allowed or Not	Modified with Main Code or Not
E019.7	No-load current auto-tuning overlimit	0	0 to 5	☆	○
E020.1	Encoder hardware wire breakage	0	0 to 5	☆	○
E020.2	Encoder PPR error	0	0	☆	●
E020.3	No encoder feedback	0	0	☆	●
E020.5	Large encoder feedback fluctuation	0	0 to 5	☆	○
E020.8	Z signal loss	0	0 to 5	☆	○
E020.9	Encoder pulse interference	0	0 to 5	☆	○
E021.1	E2P fault (uninterrupted operation for more than 30s)	0	0 to 1	☆	○
E021.2	E2P: read fault	0	0 to 1	☆	○
E021.3	E2P: write fault	0	0 to 1	☆	○
E021.4	E2P reads and writes within 1s out-of-limit	2	0 to 4	☆	●
E021.5	E2P internal cache overrun	0	0 to 5	☆	●
E022.1	Encoder card not activated	0	0	☆	○
E023.1	Output short-to-ground	0	0	★	○
E026.1	Accumulative running duration reach	0	0 to 4	☆	○
E027.1	Custom fault 1	0	0 to 4	☆	○
E027.2	Custom fault 2	0	0 to 4	☆	○
E027.3	Custom fault 3	0	0 to 4	☆	○
E027.4	Custom fault 4	0	0 to 4	☆	○
E028.1	Custom warning 1	2	0 to 4	☆	○
E028.2	Custom warning 2	2	0 to 4	☆	○
E028.3	Custom warning 3	2	0 to 4	☆	○

Panel Display	Fault Name	Default Fault Protection Action	Fault Action Range	Reset Allowed or Not	Modified with Main Code or Not
E028.4	Custom warning 4	2	0 to 4	☆	○
E029.1	Accumulative power-on duration reach	2	0 to 4	☆	○
E030.1	Load loss	0	0 to 5	☆	○
E031.1	PID feedback loss	0	0 to 4	☆	○
E032.1	Parameter reset exception	0	0 to 5	☆	○
E032.2	Parameter backup exception	2	0 to 5	☆	○
E032.3	Parameter power-off exception	5	0 to 5	☆	○
E032.4	Parameter setting exception	2	0 to 5	☆	○
E032.6	Parameter power-on check exception	0	0 to 5	☆	○
E040.1	Pulse-by-pulse current limit fault	0	0	☆	○
E042.1	Excessive speed deviation	2	0 to 5	☆	○
E043.1	Motor speed out-of-limit	0	0 to 5	☆	○
E045.1	Motor over-temperature	0	0 to 4	☆	○
E045.2	Motor pre-overtemperature	2	2 to 5	☆	○
E047.2	STO trigger inconsistency fault	0	0	☆	○
E047.3	STO circuit power supply exception	0	0	☆	○
E047.4	STO input subsystem fault	0	0	☆	○
E047.5	STO buffer chip fault	0	0	★	●
E051.1	Pole position auto-tuning error	0	0 to 1	☆	○
E055.1	Slave error in master-slave control	1	0 to 5	☆	○

Panel Display	Fault Name	Default Fault Protection Action	Fault Action Range	Reset Allowed or Not	Modified with Main Code or Not
E056.2	IGBT U+ short circuit during self-check	0	0	☆	○
E056.3	IGBT U- short circuit during self-check	0	0	☆	○
E056.4	IGBT V+ short circuit during self-check	0	0	☆	○
E056.5	IGBT V- short circuit during self-check	0	0	☆	○
E056.9	System output phase loss	0	0	☆	○
E057.1	U phase upper bridge or V phase lower bridge IGBT continuity failure	0	0	☆	○
E057.2	U phase lower bridge or V phase upper bridge IGBT continuity failure	0	0	☆	○
E057.3	V phase upper bridge or W phase lower bridge IGBT continuity failure	0	0	☆	○
E057.4	V phase lower bridge or W phase upper bridge IGBT continuity failure	0	0	☆	○
E057.5	W phase upper bridge or U phase lower bridge IGBT continuity failure	0	0	☆	○
E057.6	W phase lower bridge or U phase upper bridge IGBT continuity failure	0	0	☆	○
E057.7	UV output end short circuit	0	0	☆	○
E057.8	VW output end short circuit	0	0	☆	○

Panel Display	Fault Name	Default Fault Protection Action	Fault Action Range	Reset Allowed or Not	Modified with Main Code or Not
E057.9	WU output end short circuit	0	0	☆	○
E058.1	Module U phase current sensor inversely installed	0	0	☆	○
E058.2	Module V phase current sensor inversely installed	0	0	☆	○
E058.3	Module W phase current sensor inversely installed	0	0	☆	○
E058.4	Module UV phase sensor incorrectly inserted	0	0	☆	○
E058.5	Module VW phase sensor incorrectly inserted	0	0	☆	○
E058.6	Module WU phase sensor incorrectly inserted	0	0	☆	○
E059.1	VW phase imbalance	0	0	☆	○
E059.2	UW phase imbalance	0	0	☆	○
E059.3	UV phase imbalance	0	0	☆	○
E061.1	Braking overload	0	0	☆	○
E062.2	Braking transistor shoot-through	0	0	☆	○
E062.3	Braking transistor overcurrent	0	0	☆	○
E063.1	External alarm 1	2	2 to 4	☆	○
E063.2	External alarm 2	2	2 to 4	☆	○
E082.2	Pre-charge contactor feedback exception	0	0	☆	○
E085.4	Timing fault	2	0 to 4	☆	○
E093.1	Motor rotor locked fault	0	0 to 5	☆	○
E093.2	Motor stall	0	0	☆	○

Panel Display	Fault Name	Default Fault Protection Action	Fault Action Range	Reset Allowed or Not	Modified with Main Code or Not
E093.3	Current control exception	0	0	☆	○
E094.1	Inconsistency between calculated and set number of pole pairs	Unchangeable by default		☆	○
E094.2	Asynchronous motor power, voltage, and current matching error			☆	○
E094.3	No-load current range error			☆	○
E094.4	Inconsistency between Lm I0 and rated voltage			☆	○
E094.5	Rotor resistance setting range exception			☆	○
E094.7	Mismatch between the numbers of pole pairs of the resolver and synchronous motor			☆	○
E159.1	Auto reset failure	0	0	☆	○
E160.1	Modbus communication timeout	1	0 to 5	☆	○
E161.1	CANopen communication timeout	1	0 to 5	☆	○
E161.2	Inconsistency between PDO mapping configured for CANopen and the actual mapping	1	0 to 5	☆	○
E162.1	CANlink heartbeat timeout	1	0 to 5	☆	○
E162.2	CANlink station number conflict	1	0 to 5	☆	○

Panel Display	Fault Name	Default Fault Protection Action	Fault Action Range	Reset Allowed or Not	Modified with Main Code or Not
E164.1	Master-slave control communication fault	1	0 to 5	☆	○
E174.1	HDI1 wire breakage	5	0 to 5	☆	○
E174.3	AI1 wire breakage	5	0 to 5	☆	○
E174.4	AI2 wire breakage	5	0 to 5	☆	○
E174.5	AI3 wire breakage	5	0 to 5	☆	○

5 Parameters

5.1 List of Parameters

If FP-00 is set to a non-zero value (password protection is enabled), the parameter menu is accessible in parameter mode and user-modification mode only after the correct password is entered. To disable password protection, set FP-00 to 0.

If a password is set to lock the operating panel, password authentication is required every time you exit and then access the parameter menu for reading or writing parameter values using the operating panel. During communication control, the values of parameters (excluding parameters in groups FP and FF) can be read and written without password authentication.

Password protection is not available for the parameter menu in user-defined mode.

Groups F, A, B, C, and H are standard function parameters, group U is monitoring function parameters, and group L is connector function parameters.

Para.	Comm. Addr.	Name	Reference	Default	Unit	Change
F0-00	0xF000	Load type display	0: Heavy load application 1: Light load application	0	-	Unchangeable
F0-01	0xF001	Motor 1 control mode	0: SVC 1: FVC 2: V/f	2	-	Changeable only at stop
F0-02	0xF002	Operation command source	0: Operating panel 1: Terminal 2: Communication 3: Customization	0	-	Changeable only at stop
F0-03	0xF003	Main frequency source X	0: Digital setting (non-retentive at power failure) 1: Digital setting (retentive at power failure) 2: AI1 3: AI2 4: AI3 5: Pulse reference (DI5) 6: Multi-reference 7: Simple PLC 8: PID 9: Communication Others: F connector	0	-	Changeable only at stop

Para.	Comm. Addr.	Name	Reference	De fault	Unit	Change
F0-04	0xF004	Auxiliary frequency source Y	0: Digital setting (non-retentive at power failure) 1: Digital setting (retentive at power failure) 2: AI1 3: AI2 4: AI3 5: Pulse reference (DI5) 6: Multi-reference 7: Simple PLC 8: PID 9: Communication Others: F connector	0	-	Changeable only at stop
F0-05	0xF005	Base value of range of auxiliary frequency source for superposition	0: Relative to maximum frequency 1: Relative to main frequency X	0	-	Changeable at any time
F0-06	0xF006	Range of auxiliary frequency source Y for superposition	0% to 150%	100	%	Changeable at any time
F0-07	0xF007	Frequency source superposition	Ones: Frequency reference 0: Main frequency source X 1: Main and auxiliary operation result (based on tens) 2: Switchover between main frequency source X and auxiliary frequency source Y 3: Switchover between main frequency source X and the main and auxiliary operation result 4: Switchover between auxiliary frequency source Y and the main and auxiliary operation result Tens: Main and auxiliary frequency reference operation 0: Main + Auxiliary 1: Main – Auxiliary 2: Max. (main, auxiliary) 3: Min. (main, auxiliary) 4: Main x Auxiliary	0	-	Changeable at any time
F0-08	0xF008	Preset frequency	0.00 Hz to F0-10	50.00	Hz	Changeable at any time
F0-09	0xF009	Running direction	1: Default direction 1: Reverse to the default direction	0	-	Changeable at any time
F0-10	0xF00A	Maximum frequency	50.00 Hz to 500.00 Hz	50.00	Hz	Changeable only at stop

Para.	Comm. Addr.	Name	Reference	De fault	Unit	Change
F0-11	0xF00B	Source of frequency upper limit	0: F0-12 1: AI1 2: AI2 3: AI3 4: Pulse reference 5: Communication Others: F connector	0	-	Changeable only at stop
F0-12	0xF00C	Frequency upper limit	F0-14 to F0-10	50.00	Hz	Changeable at any time
F0-13	0xF00D	Frequency upper limit offset	0.00 Hz to F0-10	0.00	Hz	Changeable at any time
F0-14	0xF00E	Frequency lower limit	0.00 Hz to F0-12	0.00	Hz	Changeable at any time
F0-15	0xF00F	Carrier frequency	0.5 kHz to 16.0 kHz	6.0	kHz	Changeable at any time
F0-16	0xF010	Carrier frequency adjusted with temperature	0: No 1: Yes	0	-	Changeable at any time
F0-17	0xF011	Acceleration time 1	0.0s to 6500.0s	20.0	s	Changeable at any time
F0-18	0xF012	Deceleration time 1	0.0s to 6500.0s	20.0	s	Changeable at any time
F0-19	0xF013	Acceleration/ Deceleration time unit	0: 1s 1: 0.1s 2: 0.01s	1	-	Changeable only at stop
F0-20	0xF014	Offset frequency source	0: F0-21 1: AI1 2: AI2 3: AI3 4: Pulse reference 5: Communication 6: Multi-reference 7: Motor-driven potentiometer 8: PID Others: F connector	0	-	Changeable only at stop
F0-21	0xF015	Offset frequency	0.00 Hz to F0-10	0.00	Hz	Changeable at any time
F0-22	0xF016	Decimal places of frequency reference	1: 0.1 Hz 2: 0.01 Hz	2	-	Changeable only at stop
F0-23	0xF017	Retention of digital setting	0: Non-retentive 1: Retentive	0	-	Changeable at any time
F0-24	0xF018	Motor parameter group	0: Motor parameter group 1 1: Motor parameter group 2 2: Motor parameter group 3 3: Motor parameter group 4	0	-	Changeable only at stop

Para.	Comm. Addr.	Name	Reference	Default	Unit	Change
F0-25	0xF019	Acceleration/ Deceleration time base frequency	0: F0-10 (maximum frequency) 1: Frequency reference 2: 100 Hz 3: Rated frequency	0	-	Changeable only at stop
F0-26	0xF01A	Base frequency for UP/DOWN modification during running	0: Running frequency 1: Frequency reference	0	-	Changeable only at stop
F0-27	0xF01B	Frequency reference source bound to command source	Ones: Frequency reference source bound to operating panel control 0: No binding 1: Digital setting 2: AI1 3: AI2 4: AI3 5: Pulse 6: Multi-reference 7: Simple PLC 8: PID 9: Communication Tens: Frequency reference source bound to terminal control 0: No binding 1: Digital setting 2: AI1 3: AI2 4: AI3 5: Pulse 6: Multi-reference 7: Simple PLC 8: PID 9: Communication Hundreds: Frequency reference source bound to communication control 0: No binding 1: Digital setting 2: AI1 3: AI2 4: AI3 5: Pulse 6: Multi-reference 7: Simple PLC 8: PID 9: Communication	0	-	Changeable at any time
F0-28	0xF01C	Communication protocol	0 Modbus 1: Extended communication protocol	0	-	Changeable only at stop
F0-29	0xF01D	Load type	0: Heavy load application 1: Light load application	0	-	Changeable only at stop

Para.	Comm. Addr.	Name	Reference	De fault	Unit	Change
F1-00	0xF100	Motor type	0: Common asynchronous motor 1: Variable frequency asynchronous motor 2: Permanent magnet synchronous motor	0	-	Changeable only at stop
F1-01	0xF101	Rated motor power	0.1 kW to 1000.0 kW	3.7	kW	Changeable only at stop
F1-02	0xF102	Rated motor voltage	1 V to 2000 V	380	V	Changeable only at stop
F1-03	0xF103	Rated motor current	0.01 A to 655.35 A	9.00	A	Changeable only at stop
F1-04	0xF104	Rated motor frequency	0.01 Hz to F0-10	50.00	Hz	Changeable only at stop
F1-05	0xF105	Rated motor speed	1 RPM to 65535 RPM	1460	RPM	Changeable only at stop
F1-06	0xF106	Asynchronous motor stator resistance	0.001 Ω to 65.535 Ω	1.204	Ω	Changeable only at stop
F1-07	0xF107	Asynchronous motor rotor resistance	0.001 Ω to 65.535 Ω	0.908	Ω	Changeable only at stop
F1-08	0xF108	Asynchronous motor leakage inductance	0.01 mH to 655.35 mH	5.28	mH	Changeable only at stop
F1-09	0xF109	Asynchronous motor mutual inductance	0.1 mH to 6553.5 mH	156.8	mH	Changeable only at stop
F1-10	0xF10A	Asynchronous motor no-load current	0.01 A to F1-03	4.20	A	Changeable only at stop
F1-16	0xF110	Synchronous motor stator resistance	0.001 Ω to 65.535 Ω	1.204	Ω	Changeable only at stop
F1-17	0xF111	Synchronous motor D axis inductance	0.01 mH to 655.35 mH	5.28	mH	Changeable only at stop
F1-18	0xF112	Synchronous motor Q axis inductance	0.01 mH to 655.35 mH	5.28	mH	Changeable only at stop
F1-20	0xF114	Synchronous motor back EMF coefficient	0.0 V to 6553.5 V	300.0	V	Changeable only at stop
F1-27	0xF11B	Encoder PPR	1 to 65535	1024	-	Changeable only at stop
F1-28	0xF11C	Encoder type	0: ABZ incremental encoder 1: 23-bit encoder 2: Resolver 3: External input	0	-	Changeable only at stop
F1-29	0xF11D	Speed feedback PG card	0: Local PG card 1: Extension PG card	0	-	Changeable only at stop

Para.	Comm. Addr.	Name	Reference	De fault	Unit	Change
F1-30	0xF11E	A/B phase sequence of encoder	0: Forward 1: Reverse	0	-	Changeable only at stop
F1-31	0xF11F	Encoder installation angle	0.0° to 359.9°	0.0	°	Changeable only at stop
F1-34	0xF122	Number of resolver pole pairs	1 to 65535	1	-	Changeable only at stop
F1-36	0xF124	Speed feedback PG wire breakage detection time	0.0s to 10.0s	0.0	s	Changeable only at stop
F1-37	0xF125	Auto-tuning	0: No operation 1: Static auto-tuning on partial parameters of asynchronous motor 2: Dynamic auto-tuning on asynchronous motor 3: Static auto-tuning on all parameters of asynchronous motor 4: Inertia auto-tuning 5: Deadzone auto-tuning 11: With-load auto-tuning on synchronous motor (excluding back EMF) 12: No-load dynamic auto-tuning on synchronous motor 13: Static auto-tuning on all parameters of synchronous motor (excluding zero point angle)	0	-	Changeable only at stop
F2-00	0xF200	Speed loop proportional gain 1	1 to 300	30	-	Changeable at any time
F2-01	0xF201	Speed loop integral time 1	0.01s to 10.00s	0.50	s	Changeable at any time
F2-02	0xF202	Switchover frequency 1	0.00 Hz to F2-05	5.00	Hz	Changeable at any time
F2-03	0xF203	Speed loop proportional gain 2	1 to 300	20	-	Changeable at any time
F2-04	0xF204	Speed loop integral time 2	0.01s to 10.00s	1.00	s	Changeable at any time
F2-05	0xF205	Switchover frequency 2	F2-02 to F0-10	10.00	Hz	Changeable at any time
F2-06	0xF206	Vector control slip gain	50% to 200%	100	%	Changeable at any time
F2-07	0xF207	Speed feedback filter time in SVC mode	0.000s to 0.100s	0.015	s	Changeable at any time

Para.	Comm. Addr.	Name	Reference	Default	Unit	Change
F2-09	0xF209	Torque upper limit source in speed control mode (motoring)	0: Digital setting (F2-10) 1: AI1 2: AI2 3: AI3 4: Pulse reference 5: Communication 6: MIN (AI1, AI2) 7: MAX (AI1, AI2) Others: F connector	0	-	Changeable at any time
F2-10	0xF20A	Torque upper limit in speed control mode	0.0% to 200.0%	150.0	%	Changeable at any time
F2-11	0xF20B	Torque upper limit source in speed control mode (generating)	0: Digital setting (F2-10) 1: AI1 2: AI2 3: AI3 4: Pulse reference (DI5) 5: Communication 6: MIN (AI1, AI2) 7: MAX (AI1, AI2) 8: Digital setting (F2-12) Others: F connector	0	-	Changeable at any time
F2-12	0xF20C	Torque upper limit in speed control mode (generating)	0.0% to 200.0%	150.0	%	Changeable at any time
F2-18	0xF212	Field weakening mode	0: No field weakening 1: Auto adjustment 2: Calculation+Auto adjustment	1	-	Changeable only at stop
F2-19	0xF213	Field weakening gain	1 to 50	5	-	Changeable at any time
F2-22	0xF216	Generating power limiting	0: Disabled 1: Enabled in the whole process 2: Enabled at constant speed 3: Enabled during deceleration	0	-	Changeable at any time
F2-23	0xF217	Generating power upper limit	0.0% to 200.0%	20.0	%	Changeable at any time
F2-24	0xF218	Initial position angle detection current of synchronous motor	50 to 180	80	-	Changeable only at stop
F2-25	0xF219	Initial position angle detection of synchronous motor	0: Detected upon running 1: Not detected 2: Detected upon initial running after power-on	0	-	Changeable at any time
F2-27	0xF21B	Salient pole rate adjustment gain of synchronous motor	0.20 to 3.00	1.00	-	Changeable at any time

Para.	Comm. Addr.	Name	Reference	De fault	Unit	Change
F2-28	0xF21C	Maximum torque-to-current ratio control of synchronous motor	0: Disabled 1: Enabled	1	-	Changeable at any time
F2-32	0xF220	Z signal correction	0: Disabled 1: Enabled	1	-	Changeable at any time
F2-37	0xF225	Low speed carrier frequency	0.8 kHz to F0-15	2.0	kHz	Changeable at any time
F2-43	0xF22B	Position lock	0 to 1	0	-	Changeable at any time
F2-44	0xF22C	Switchover frequency	0.00 Hz to F2-02	0.30	Hz	Changeable at any time
F2-45	0xF22D	Position lock speed loop proportional gain	1 to 100	10	-	Changeable at any time
F2-46	0xF22E	Position lock speed loop integral time	0.01s to 10.00s	0.50	s	Changeable at any time
F2-49	0xF231	Auto-tuning free mode	0: Disabled 1: Auto-tuning upon initial running after power-on 2: Auto-tuning upon running	0	-	Changeable at any time
F2-51	0xF233	Initial position compensation angle	0.0 to 359.9	0.0	-	Changeable at any time
F3-00	0xF300	V/f curve	0: Straight-line V/f curve 1: Multi-point V/f curve 2-9: Reserved 10: V/f complete separation mode 11: V/f half separation mode	0	-	Changeable only at stop
F3-01	0xF301	Torque boost	0.0% to 30.0%	3.0	%	Changeable at any time
F3-02	0xF302	Cut-off frequency of torque boost	0.00 Hz to F0-10	50.00	Hz	Changeable only at stop
F3-03	0xF303	Multi-point V/f frequency 1	0.00 Hz to F3-05	0.00	Hz	Changeable only at stop
F3-04	0xF304	Multi-point V/f voltage 1	0.0% to +100.0%	0.0	%	Changeable only at stop
F3-05	0xF305	Multi-point V/f frequency 2	F3-03 to F3-07	0.00	Hz	Changeable only at stop
F3-06	0xF306	Multi-point V/f voltage 2	0.0% to +100.0%	0.0	%	Changeable only at stop
F3-07	0xF307	Multi-point V/f frequency 3	F3-05 to F1-04	0.00	Hz	Changeable only at stop
F3-08	0xF308	Multi-point V/f voltage 3	0.0% to +100.0%	0.0	%	Changeable only at stop

Para.	Comm. Addr.	Name	Reference	De fault	Unit	Change
F3-09	0xF309	V/f slip compensation gain	0.0 to 200.0	0.0	-	Changeable at any time
F3-10	0xF30A	V/f overexcitation gain	0 to 200	64	-	Changeable at any time
F3-11	0xF30B	V/f oscillation suppression gain	0 to 100	40	-	Changeable at any time
F3-12	0xF30C	V/f oscillation suppression	0: Disabled 1: Enabled	1	-	Changeable at any time
F3-13	0xF30D	Voltage source for V/f separation	0: Digital setting (F3-14) 1: AI1 2: AI2 3: AI3 4: Pulse reference (DI5) 5: Multi-reference 6: Simple PLC 7: PID 8: Communication Others: F connector	0	-	Changeable at any time
F3-14	0xF30E	V/f separation voltage	0 V to F1-02	0	V	Changeable at any time
F3-15	0xF30F	Voltage rise time of V/f separation	0.0s to 1000.0s	0.0	s	Changeable at any time
F3-16	0xF310	Voltage fall time of V/f separation	0.0s to 1000.0s	0.0	s	Changeable at any time
F3-17	0xF311	Stop mode for V/f separation	0: Frequency and voltage decline to 0 independently 1: Frequency declines to 0 after voltage declines to 0 2: Coast to stop (new)	0	-	Changeable at any time
F3-18	0xF312	Overcurrent stall suppression action current	50% to 200%	150	%	Changeable only at stop
F3-19	0xF313	Overcurrent stall suppression	0: Disabled 1: Enabled	1	-	Changeable only at stop
F3-20	0xF314	Overcurrent stall suppression gain	1 to 100	20	-	Changeable at any time
F3-21	0xF315	Compensation coefficient of speed multiplying overcurrent stall suppression action current	50% to 200%	100	%	Changeable only at stop
F3-22	0xF316	Overvoltage stall suppression action voltage	330.0 V to 800.0 V	770.0	V	Changeable at any time

Para.	Comm. Addr.	Name	Reference	De fault	Unit	Change
F3-23	0xF317	Overvoltage stall suppression	0: Disabled 1: Enabled	1	-	Changeable only at stop
F3-24	0xF318	Overvoltage stall suppression frequency gain	1 to 100	30	-	Changeable at any time
F3-25	0xF319	Overvoltage stall suppression voltage gain	1 to 100	30	-	Changeable at any time
F3-26	0xF31A	Frequency rise threshold for overvoltage stall suppression	0 Hz to 50 Hz	5	Hz	Changeable only at stop
F3-27	0xF31B	Slip compensation filter time	0.1s to 10.0s	0.5	s	Changeable only at stop
F3-28	0xF31C	Multi-point curve source	0: 3-point curve 1: Multi-point curve module A 2: Multi-point curve module B	0	-	Changeable only at stop
F3-33	0xF321	Online torque compensation gain	80 to 150	100	-	Changeable only at stop
F3-34	0xF322	ImaxKi coefficient	10% to 1000%	100	%	Changeable only at stop
F3-35	0xF323	Overcurrent suppression threshold (relative to rated motor current)	80% to 300%	200	%	Changeable only at stop
F3-36	0xF324	Frequency threshold for overcurrent suppression field weakening	100% to 500%	100	%	Changeable only at stop
F3-37	0xF325	IT filter time	10 ms to 1000 ms	100	ms	Changeable only at stop
F3-38	0xF326	Slip compensation mode	0: Disabled 1: Slip compensation without PG 2: Slip compensation with PG	1	-	Changeable only at stop
F3-39	0xF327	VdcMaxCtrl allowed runtime	0.0s to 100.0s	0.0	s	Changeable only at stop
F3-40	0xF328	Upper limit of V/f separation voltage	50.0% to 200.0%	100.0	%	Changeable only at stop
F3-41	0xF329	RFG time of V/f separation frequency	0: RFG time forced to 0 1: Preset RFG time	0	-	Changeable only at stop

Para.	Comm. Addr.	Name	Reference	De fault	Unit	Change
F3-42	0xF32A	Cut-off frequency of V/f oscillation suppression filter	1.0 Hz to 50.0 Hz	8.0	Hz	Changeable at any time
F3-43	0xF32B	Cut-off frequency threshold for V/f oscillation suppression	10 Hz to 3000 Hz	200	Hz	Changeable at any time
F3-44	0xF32C	VdcMaxCtrl feedforward coefficient	0% to 500%	0	%	Changeable at any time
F3-50	0xF332	PMVVC low-speed IF	0: Disabled 1: Enabled	1	-	Changeable only at stop
F3-51	0xF333	PMVVC low-speed IF current	30 to 250	100	-	Changeable only at stop
F3-52	0xF334	PMVVC low-speed IF speed switching threshold	2.0% to 100.0%	10.0	%	Changeable only at stop
F3-53	0xF335	PMVVC oscillation suppression gain coefficient	0 to 500	100	-	Changeable at any time
F3-54	0xF336	PMVVC filter time coefficient	0 to 500	100	-	Changeable at any time
F3-55	0xF337	PMVVC energy conservation control mode	0: Fixed straight-line V/f curve 1: Fixed 30% reactive current 2: MTPA control	2	-	Changeable only at stop

Para.	Comm. Addr.	Name	Reference	De fault	Unit	Change
F4-00	0xF400	DI1 function	0: No function 1: Forward RUN (IN1) 2: Reverse RUN (IN2) 3: Three-wire control (IN3) 4: Forward jog (FJOG) 5: Reverse jog (RJOG) 6: Terminal UP 7:Terminal DOWN 8: Coast to stop 9: Fault reset (RESET) 10: Running pause 11: External fault NO input 12: Multi-reference terminal 1 13: Multi-reference terminal 2 14: Multi-reference terminal 3 15: Multi-reference terminal 4 16: Acceleration/deceleration selection terminal 1 17: Acceleration/deceleration selection terminal 2 18: Frequency source switchover 19: UP and DOWN setting clear 20: Command source switchover terminal 1 21: Acceleration/Deceleration inhibition 22: PID pause 23: Simple PLC state reset 24: Wobble pause 25: Counter input 26: Counter reset 27: Length count input 28: Length reset 29: Torque control inhibition 30: Pulse frequency input 31: Reserved 32: Immediate DC braking 33: External fault NC input 34: Frequency modification enable 35: PID action direction reversal (To be continued)	1	-	Changeable only at stop

Para.	Comm. Addr.	Name	Reference	Default	Unit	Change
(Continued)	(Continued)	(Continued)	(Continued) 36: External stop terminal 1 37: Command source switchover terminal 2 38: PID integral pause 39: Switchover between main frequency and preset frequency 40: Switchover between auxiliary frequency and preset frequency 41: Motor selection terminal 1 42: Reserved 43: PID parameter switchover 44: User-defined fault 1 45: User-defined fault 2 46: Switchover between speed control and torque control 47: Emergency stop 48: External stop terminal 2 49: Deceleration DC braking 50: Current running duration clear 51: Switchover between two-wire and three-wire control 52: Reverse running inhibition 53–69: Reserved 70: Control channel 71: Reference source (Reserved) 72: Terminal module 73: Startup mode bit0 74: Startup mode bit1 75: Command source switchover terminal 3 76: Motor selection terminal 2 77: Running enable 78: Forward RUN enable 79: Reverse RUN enable 80: RFG input set to 0	1	-	Changeable only at stop
F4-01	0xF401	DI2 function	Same as F4-00	4	-	Changeable only at stop
F4-02	0xF402	DI3 function	Same as F4-00	9	-	Changeable only at stop
F4-03	0xF403	DI4 function	Same as F4-00	12	-	Changeable only at stop

Para.	Comm. Addr.	Name	Reference	De fault	Unit	Change
F4-04	0xF404	DI5 function	0: No function 1: Forward RUN (IN1) 2: Reverse RUN (IN2) 3: Three-wire control (IN3) 4: Forward jog (FJOG) 5: Reverse jog (RJOG) 6: Terminal UP 7:Terminal DOWN 8: Coast to stop 9: Fault reset (RESET) 10: Running pause 11: External fault NO input 12: Multi-reference terminal 1 13: Multi-reference terminal 2 14: Multi-reference terminal 3 15: Multi-reference terminal 4 16: Acceleration/deceleration selection terminal 1 17: Acceleration/deceleration selection terminal 2 18: Frequency source switchover 19: UP and DOWN setting clear 20: Command source switchover terminal 1 21: Acceleration/Deceleration inhibition 22: PID pause 23: Simple PLC state reset 24: Wobble pause 25: Counter input 26: Counter reset 27: Length count input 28: Length reset 29: Torque control inhibition 31: Reserved 32: Immediate DC braking 33: External fault NC input 34: Frequency modification enable 35: PID action direction reversal	13	-	Changeable only at stop

Para.	Comm. Addr.	Name	Reference	Default	Unit	Change
(Continued)	(Continued)	(Continued)	(Continued) 36: External stop terminal 1 37: Command source switchover terminal 2 38: PID integral pause 39: Switchover between main frequency and preset frequency 40: Switchover between auxiliary frequency and preset frequency 41: Motor selection terminal 1 42: Reserved 43: PID parameter switchover 44: User-defined fault 1 45: User-defined fault 2 46: Switchover between speed control and torque control 47: Emergency stop 48: External stop terminal 2 49: Deceleration DC braking 50: Current running duration clear 51: Switchover between two-wire and three-wire control 52: Reverse running inhibition 53–69: Reserved 70: Control channel 71: Reference source (Reserved) 72: Terminal module 73: Startup mode bit0 74: Startup mode bit1 75: Command source switchover terminal 3 76: Motor selection terminal 2 77: Running enable 78: Forward RUN enable 79: Reverse RUN enable 80: RFG input set to 0 (To be continued)	13	-	Changeable only at stop
F4-05	0xF405	DI6 function	Same as F4-00	0	-	Changeable only at stop
F4-06	0xF406	DI7 function	Same as F4-00	0	-	Changeable only at stop
F4-07	0xF407	DI8 function	Same as F4-00	0	-	Changeable only at stop
F4-08	0xF408	DI9 function	Same as F4-00	0	-	Changeable only at stop
F4-09	0xF409	DI10 function	Same as F4-00	0	-	Changeable only at stop
F4-10	0xF40A	DI filter time	0.000s to 1.000s	0.010	s	Changeable at any time

Para.	Comm. Addr.	Name	Reference	De fault	Unit	Change
F4-11	0xF40B	Terminal control mode	0: Two-wire mode 1 1: Two-wire mode 2 2: Three-wire mode 1 3: Three-wire mode 2	0	-	Changeable only at stop
F4-12	0xF40C	Terminal UP/DOWN change rate	0.001 Hz/s to 65.535 Hz/s	1.000	Hz/s	Changeable at any time
F4-13	0xF40D	Minimum input of AI curve 1	–10 V to F4-15	0.00	V	Changeable at any time
F4-14	0xF40E	Percentage corresponding to minimum input of AI curve 1	–100% to +100.0%	0.0	%	Changeable at any time
F4-15	0xF40F	Maximum input of AI curve 1	F4-13 to 10.00 V	10.00	V	Changeable at any time
F4-16	0xF410	Percentage corresponding to maximum input of AI curve 1	–100% to +100.0%	100.0	%	Changeable at any time
F4-17	0xF411	AI1 filter time	0.00s to 10.00s	0.10	s	Changeable at any time
F4-18	0xF412	Minimum input of AI curve 2	–10 V to F4-20	0.00	V	Changeable at any time
F4-19	0xF413	Percentage corresponding to minimum input of AI curve 2	–100% to +100.0%	0.0	%	Changeable at any time
F4-20	0xF414	Maximum input of AI curve 2	F4-18 to 10.00 V	10.00	V	Changeable at any time
F4-21	0xF415	Percentage corresponding to maximum input of AI curve 2	–100% to +100.0%	100.0	%	Changeable at any time
F4-22	0xF416	AI2 filter time	0.00s to 10.00s	0.10	s	Changeable at any time
F4-23	0xF417	Minimum input of AI curve 3	–10 V to F4-25	–10	V	Changeable at any time
F4-24	0xF418	Percentage corresponding to minimum input of AI curve 3	–100% to +100.0%	–100	%	Changeable at any time
F4-25	0xF419	Maximum input of AI curve 3	F4-23 to 10.00 V	10.00	V	Changeable at any time
F4-26	0xF41A	Percentage corresponding to maximum input of AI curve 3	–100% to +100.0%	100.0	%	Changeable at any time

Para.	Comm. Addr.	Name	Reference	De fault	Unit	Change
F4-27	0xF41B	AI3 fitter time	0.00s to 10.00s	0.10	s	Changeable at any time
F4-28	0xF41C	Minimum pulse input frequency	0.00 kHz to F4-30	0.00	kHz	Changeable at any time
F4-29	0xF41D	Percentage corresponding to minimum pulse input frequency	–100% to +100.0%	0.0	%	Changeable at any time
F4-30	0xF41E	Maximum pulse input frequency	F4-28 to 100.00 kHz	50.00	kHz	Changeable at any time
F4-31	0xF41F	Percentage corresponding to maximum pulse input frequency	–100% to +100.0%	100.0	%	Changeable at any time
F4-32	0xF420	Pulse filter time	0.00s to 10.00s	0.10	s	Changeable at any time
F4-33	0xF421	AI curve	Ones: AI1 curve 1: Curve 1 (2 points, F4-13 to F4-16) 2: Curve 2 (2 points, F4-18 to F4-21) 3: Curve 3 (2 points, F4-23 to F4-26) 4: Curve 4 (4 points, A6-00 to A6-07) 5: Curve 5 (4 points, A6-08 to A6-15) Tens: AI2 curve 1: Curve 1 (2 points, F4-13 to F4-16) 2: Curve 2 (2 points, F4-18 to F4-21) 3: Curve 3 (2 points, F4-23 to F4-26) 4: Curve 4 (4 points, A6-00 to A6-07) 5: Curve 5 (4 points, A6-08 to A6-15) Hundreds: AI3 curve 1: Curve 1 (2 points, F4-13 to F4-16) 2: Curve 2 (2 points, F4-18 to F4-21) 3: Curve 3 (2 points, F4-23 to F4-26) 4: Curve 4 (4 points, A6-00 to A6-07) 5: Curve 5 (4 points, A6-08 to A6-15)	0x321	-	Changeable at any time
F4-34	0xF422	AI lower limit	Ones: Setting for AI1 less than minimum input 0: Percentage corresponding to minimum input 1: 0.0% Tens: Setting for AI2 less than minimum input 0: Percentage corresponding to minimum input 1: 0.0% Hundreds: Setting for AI3 less than minimum input 0: Percentage corresponding to minimum input 1: 0.0%	0x0	-	Changeable at any time
F4-35	0xF423	DI1 delay (invalid)	0.0s to 3600.0s	0.0	s	Changeable only at stop

Para.	Comm. Addr.	Name	Reference	De fault	Unit	Change
F4-36	0xF424	DI2 delay (invalid)	0.0s to 3600.0s	0.0	s	Changeable only at stop
F4-37	0xF425	DI3 delay (invalid)	0.0s to 3600.0s	0.0	s	Changeable only at stop
F4-38	0xF426	DI active mode selection 1	Ones: DI1 0: Active low 1: Active high Tens: DI2 0: Active low 1: Active high Hundreds: DI3 0: Active low 1: Active high Thousands: DI4 0: Active low 1: Active high Ten thousands: DI5 0: Active low 1: Active high	0	-	Changeable only at stop
F4-39	0xF427	DI active mode selection 2	Ones: DI6 0: Active low 1: Active high Tens: DI7 0: Active low 1: Active high Hundreds: DI8 0: Active low 1: Active high Thousands: DI9 0: Active low 1: Active high Ten thousands: DI10 0: Active low 1: Active high	0	-	Changeable only at stop
F4-41	0xF429	DI1 switch-on delay	0.0s to 3600.0s	0.0	s	Changeable only at stop
F4-42	0xF42A	DI1 switch-off delay	0.0s to 3600.0s	0.0	s	Changeable only at stop
F4-43	0xF42B	DI2 switch-on delay	0.0s to 3600.0s	0.0	s	Changeable only at stop
F4-44	0xF42C	DI2 switch-off delay	0.0s to 3600.0s	0.0	s	Changeable only at stop
F4-45	0xF42D	DI3 switch-on delay	0.0s to 3600.0s	0.0	s	Changeable only at stop
F4-46	0xF42E	DI3 switch-off delay	0.0s to 3600.0s	0.0	s	Changeable only at stop

Para.	Comm. Addr.	Name	Reference	De fault	Unit	Change
F4-47	0xF42F	DI4 switch-on delay	0.0s to 3600.0s	0.0	s	Changeable only at stop
F4-48	0xF430	DI4 switch-off delay	0.0s to 3600.0s	0.0	s	Changeable only at stop
F4-49	0xF431	DI force data	Bit00: DI1 0: Inactive 1: Active Bit01: DI2 0: Inactive 1: Active Bit02: DI3 0: Inactive 1: Active Bit03: DI4 0: Inactive 1: Active Bit04: DI5/HDI 0: Inactive 1: Active Bit05: DI6 0: Inactive 1: Active Bit06: DI7 0: Inactive 1: Active Bit07: DI8 0: Inactive 1: Active Bit08: DI9 0: Inactive 1: Active Bit09: DI10 0: Inactive 1: Active Bit10–15: Reserved	0x0	-	Changeable at any time

Para.	Comm. Addr.	Name	Reference	Default	Unit	Change
F4-50	0xF432	DI communication data	Bit00: DI1 0: Inactive 1: Active Bit01: DI2 0: Inactive 1: Active Bit02: DI3 0: Inactive 1: Active Bit03: DI4 0: Inactive 1: Active Bit04: DI5/HDI 0: Inactive 1: Active Bit05: DI6 0: Inactive 1: Active Bit06: DI7 0: Inactive 1: Active Bit07: DI8 0: Inactive 1: Active Bit08: DI9 0: Inactive 1: Active Bit09: DI10 0: Inactive 1: Active Bit10: VDI1 0: Inactive 1: Active (To be continued)	0x0	-	Changeable at any time

Para.	Comm. Addr.	Name	Reference	Default	Unit	Change
(Continued)	(Continued)	(Continued)	(Continued) Bit11: VDI2 0: Inactive 1: Active Bit12: VDI3 0: Inactive 1: Active Bit13: VDI4 0: Inactive 1: Active Bit14: VDI5 0: Inactive 1: Active Bit15: VDI6 0: Inactive 1: Active	0x0	-	Changeable at any time
F4-51	0xF433	DI1 hardware source	0: Hardware 1: Force value	0	-	Changeable only at stop
F4-52	0xF434	DI2 hardware source	0: Hardware 1: Force value	0	-	Changeable only at stop
F4-53	0xF435	DI3 hardware source	0: Hardware 1: Force value	0	-	Changeable only at stop
F4-54	0xF436	DI4 hardware source	0: Hardware 1: Force value	0	-	Changeable only at stop
F4-55	0xF437	DI5/HDI hardware source	0: Hardware 1: Force value	0	-	Changeable only at stop

Para.	Comm. Addr.	Name	Reference	Default	Unit	Change
F4-56	0xF438	DI6 hardware source	0: Hardware 1: Force value 2: Communication 4: AI1 5: AI2 6: AI3 11: DI1 12: DI2 13: DI3 14: DI4 15: DI5/HDI 17: DI7 18: DI8 19: DI9 20: DI10 21: VDI1 22: VDI2 23: VDI3 24: VDI4 25: VDI5 26: VDI6 31: Relay 1 32: Relay 2 33: DO1 (To be continued)	0	-	Changeable only at stop
(Continued)	(Continued)	(Continued)	(Continued) 34: Expansion card relay 35: Expansion card DO2 36: VDO1 37: VDO2 38: VDO3 39: VDO4 40: VDO5 41: VDO6 42: VDO7 43: VDO8 44: VDO9 45: VDO10 46: VDO11	0	-	Changeable only at stop
F4-57	0xF439	DI7 hardware source	Same as F4-56	0	-	Changeable only at stop
F4-58	0xF43A	DI8 hardware source	Same as F4-56	0	-	Changeable only at stop
F4-59	0xF43B	DI9 hardware source	Same as F4-56	0	-	Changeable only at stop
F4-60	0xF43C	DI10 hardware source	Same as F4-56	0	-	Changeable only at stop

Para.	Comm. Addr.	Name	Reference	Default	Unit	Change
F4-61	0xF43D	DI5/HDI terminal type	0: HDI 1: DI	1	-	Unchangeable
F4-62	0xF43E	HDI polarity	0: Normal 1: Absolute value 2: Negated value 3: Negated absolute value	0	-	Changeable at any time
F4-63	0xF43F	HDI input enable	0: Disabled 1: Enabled Others: B connector	0	-	Unchangeable
F4-64	0xF440	HDI hardware source	0: Hardware sampling 1: Force setpoint	0	-	Changeable at any time
F4-65	0xF441	HDI force setpoint	0.00 kHz to 100.00 kHz	1.00	kHz	Changeable at any time
F4-66	0xF442	Minimum input of 4-point HDI curve	0.00 kHz to F4-68	10.00	kHz	Changeable at any time
F4-67	0xF443	Percentage corresponding to minimum input of 4-point HDI curve	–100% to +100.0%	–100	%	Changeable at any time
F4-68	0xF444	Inflection 1 input of 4-point HDI curve	F4-66 to F4-70	40.00	kHz	Changeable at any time
F4-69	0xF445	Percentage corresponding to inflection 1 input of 4-point HDI curve	–100% to +100.0%	–30	%	Changeable at any time
F4-70	0xF446	Inflection 2 input of 4-point HDI curve	F4-68 to F4-72	70.00	kHz	Changeable at any time
F4-71	0xF447	Percentage corresponding to inflection 2 input of 4-point HDI curve	–100% to +100.0%	30.0	%	Changeable at any time
F4-72	0xF448	Maximum input of 4-point HDI curve	F4-70 to 100.00 kHz	100.00	kHz	Changeable at any time
F4-73	0xF449	Percentage corresponding to maximum input of 4-point HDI curve	–100% to +100.0%	100.0	%	Changeable at any time
F4-74	0xF44A	HDI curve setting	Ones: HDI curve 0: 2-point curve 1: 4-point curve	0	-	Changeable at any time
F4-75	0xF44B	HDI denoising threshold	0.0% to 10.0%	0.5	%	Changeable at any time
F5-00	0xF500	FM multi-function terminal output	0: Pulse output (FMP) 1: Digital output (FMR)	0	-	Changeable at any time

Para.	Comm. Addr.	Name	Reference	Default	Unit	Change
F5-01	0xF501	FMR output function	0: No output 1: AC drive in running 2: Fault output 3: Frequency-level detection 1 (FDT1) 4: Frequency reach 5: Zero-speed running (no output at stop) 6: Motor overload pre-warning 7: AC drive overload pre-warning 8: Reference count value reach 9: Designated count value reach 10: Length reach 11: Simple PLC cycle completion 12: Accumulative running duration reach 13: Wobble limit reach 14: Torque limit reach 15: Ready to run 16: AI1 > AI2 17: Frequency upper limit reach 18: Frequency lower limit reach (no output at stop) 19: Undervoltage state 20: Communication setting 21–22: Reserved 23: Running at zero speed 2 (output at stop) 24: Accumulative power-on duration reach 25: Frequency-level detection 2 (FDT2) 26: Frequency 1 reach 27: Frequency 2 reach 28: Current 1 reach 29: Current 2 reach 30: Timing reach 31: AI1 input overlimit 32: Load loss 33: Reverse running (To be continued)	0	-	Changeable at any time
(Continued)	(Continued)	(Continued)	(continued) 34: Zero current state 35: IGBT temperature reach 36: Output overcurrent 37: Frequency lower limit reach (output at stop) 38: Alarm (all faults) 39: Motor overtemperature 40: Current running duration reach 41: Fault output (no output at undervoltage) 42: STO output 43: Running with limits Others: B connector			

Para.	Comm. Addr.	Name	Reference	De fault	Unit	Change
F5-02	0xF502	Control board relay (DO3) output function	Same as F5-01	2	-	Changeable at any time
F5-03	0xF503	Expansion card relay (DO4) output function	Same as F5-01	0	-	Changeable at any time
F5-04	0xF504	DO1 function	Same as F5-01	1	-	Changeable at any time
F5-05	0xF505	Expansion card DO2 function	Same as F5-01	4	-	Changeable at any time
F5-06	0xF506	FMP output function	0: Running frequency 1: Frequency reference 2: Output current 3: Output torque (absolute value) 4: Output power 5: Output voltage 6: Pulse input 7: AI1 8: AI2 9: AI3 10: Length 11: Count value 12: Communication setting 13: Motor speed 14: Output current 15: Bus voltage 16: Output torque (actual value) Others: F connector	0	-	Changeable at any time
F5-07	0xF507	AO1 function	Same as F5-06	0	-	Changeable at any time
F5-08	0xF508	Expansion card AO2 function	Same as F5-06	1	-	Changeable at any time
F5-09	0xF509	Maximum FMP output frequency	0.01 kHz to 100.00 kHz	50.00	kHz	Changeable at any time
F5-10	0xF50A	AO1 zero offset coefficient	–100% to +100.0%	0.0	%	Changeable at any time
F5-11	0xF50B	AO1 gain	–10 to +10.00	1.00	-	Changeable at any time
F5-12	0xF50C	AO2 zero offset coefficient	–100% to +100.0%	0.0	%	Changeable at any time
F5-13	0xF50D	AO2 gain	–10 to +10.00	1.00	-	Changeable at any time
F5-14	0xF50E	HDO output filter time	0 to 1000	0	-	Changeable at any time
F5-15	0xF50F	AO1 output filter time	0 to 1000	0	-	Changeable at any time

Para.	Comm. Addr.	Name	Reference	De fault	Unit	Change
F5-16	0xF510	AO2 output filter time	0 to 1000	0	-	Changeable at any time
F5-17	0xF511	FMR output delay (invalid)	0.0s to 3600.0s	0.0	s	Changeable at any time
F5-18	0xF512	Relay 1 (DO3) output delay (invalid)	0.0s to 3600.0s	0.0	s	Changeable at any time
F5-19	0xF513	Relay 2 (DO4) output delay (invalid)	0.0s to 3600.0s	0.0	s	Changeable at any time
F5-20	0xF514	DO1 output delay (invalid)	0.0s to 3600.0s	0.0	s	Changeable at any time
F5-21	0xF515	DO2 output delay (invalid)	0.0s to 3600.0s	0.0	s	Changeable at any time
F5-22	0xF516	DO active mode	Ones: FMR 0: Positive logic active 1: Negative logic active Tens: Relay 1 (DO3) 0: Positive logic active 1: Negative logic active Hundreds: Relay 2 (DO4) 0: Positive logic active 1: Negative logic active Thousands: DO1 0: Positive logic active 1: Negative logic active Ten thousands: DO2 0: Positive logic active 1: Negative logic active	0	-	Changeable at any time
F5-24	0xF518	Control board relay (DO3) switch-on delay	0.0s to 3600.0s	0.0	s	Changeable at any time
F5-25	0xF519	Control board relay (DO3) switch-off delay	0.0s to 3600.0s	0.0	s	Changeable at any time
F5-26	0xF51A	FMR output switch-on delay	0.0s to 3600.0s	0.0	s	Changeable at any time
F5-27	0xF51B	FMR output switch-off delay	0.0s to 3600.0s	0.0	s	Changeable at any time
F5-28	0xF51C	DO1 output switch-on delay	0.0s to 3600.0s	0.0	s	Changeable at any time
F5-29	0xF51D	DO1 output switch-off delay	0.0s to 3600.0s	0.0	s	Changeable at any time
F5-30	0xF51E	Expansion card relay (DO4) switch-on delay	0.0s to 3600.0s	0.0	s	Changeable at any time

Para.	Comm. Addr.	Name	Reference	De fault	Unit	Change
F5-31	0xF51F	Expansion card relay (DO4) switch-off delay	0.0s to 3600.0s	0.0	s	Changeable at any time
F5-32	0xF520	Expansion card DO2 output switch-on delay	0.0s to 3600.0s	0.0	s	Changeable at any time
F5-33	0xF521	Expansion card DO2 output switch-off delay	0.0s to 3600.0s	0.0	s	Changeable at any time
F5-34	0xF522	DO/RO source	Bit00: Relay 1 (DO3) output source 0: Output function 1: Communication Bit01: FMR output source 0: Output function 1: Communication Bit02: DO1 output source 0: Output function 1: Communication Bit03: Relay 2 (DO4) output source 0: Output function 1: Communication Bit04: DO2 output source 0: Output function 1: Communication Bit05: VDO1 output source 0: Output function 1: Communication Bit06: VDO2 output source 0: Output function 1: Communication Bit07: VDO3 output source 0: Output function 1: Communication Bit08: VDO4 output source 0: Output function 1: Communication (To be continued)	0x0	-	Changeable at any time

Para.	Comm. Addr.	Name	Reference	Default	Unit	Change
(Continued)	(Continued)	(Continued)	(Continued) Bit09: VDO5 output source 0: Output function 1: Communication Bit10: VDO6 output source 0: Output function 1: Communication Bit11: VDO7 output source 0: Output function 1: Communication Bit12: VDO8 output source 0: Output function 1: Communication Bit13: VDO9 output source 0: Output function 1: Communication Bit14: VDO10 output source 0: Output function 1: Communication Bit15: VDO11 output source 0: Output function 1: Communication			
F5-35	0xF523	DO/RO terminal communication control	Same as F5-34	0x0	-	Changeable at any time
F5-36	0xF524	Minimum input of AO1 curve	–100.0% to F5-38	0.0	%	Changeable at any time
F5-37	0xF525	Setpoint corresponding to minimum input of AO1 curve	0.00 V to 10.00 V	0.00	V	Changeable at any time
F5-38	0xF526	Maximum input of AO1 curve	F5-36 to 100.0%	100.0	%	Changeable at any time
F5-39	0xF527	Setpoint corresponding to maximum input of AO1 curve	0.00 V to 10.00 V	10.00	V	Changeable at any time
F5-40	0xF528	AO1 output offset	–10 V to +10.00 V	0.00	V	Changeable at any time
F5-41	0xF529	Minimum input of AO2 curve	–100.0% to F5-43	0.0	%	Changeable at any time
F5-42	0xF52A	Setpoint corresponding to minimum input of AO2 curve	0.00 V to 10.00 V	0.00	V	Changeable at any time
F5-43	0xF52B	Maximum input of AO2 curve	F5-41 to 100.0%	100.0	%	Changeable at any time

Para.	Comm. Addr.	Name	Reference	Default	Unit	Change
F5-44	0xF52C	Setpoint corresponding to maximum input of AO2 curve	0.00 V to 10.00 V	10.00	V	Changeable at any time
F5-45	0xF52D	AO2 output offset	–10 V to +10.00 V	0.00	V	Changeable at any time
F5-46	0xF52E	AO curve	Ones: AO1 curve 0: 2-point curve 1: Gain+Offset Tens: AO2 curve 0: 2-point curve 1: Gain+Offset	11	-	Changeable at any time
F5-47	0xF52F	AO polarity	Ones: AO1 0: Normal 1: Absolute value 2: Negated value 3: Negated absolute value Tens: AO2 0: Normal 1: Absolute value 2: Negated value 3: Negated absolute value	0	-	Changeable at any time
F5-48	0xF530	AO hardware source	Ones: AO1 source 0: Output function 1: Force setpoint Tens: AO2 source 0: Output function 1: Force setpoint	0	-	Changeable at any time
F5-49	0xF531	AO force setpoint 1	0.00 V to 10.00 V	0.00	V	Changeable at any time
F5-50	0xF532	AO force setpoint 2	0.00 V to 10.00 V	0.00	V	Changeable at any time
F5-51	0xF533	Minimum input of HDO curve	–100.0% to F5-53	0.00	%	Changeable at any time
F5-52	0xF534	Percentage corresponding to minimum input of HDO curve	0.00% to 100.00%	0.00	%	Changeable at any time
F5-53	0xF535	Maximum input of HDO curve	F5-51 to 100.00%	100.00	%	Changeable at any time
F5-54	0xF536	Percentage corresponding to maximum input of HDO curve	0.00% to 100.00%	100.00	%	Changeable at any time

Para.	Comm. Addr.	Name	Reference	De fault	Unit	Change
F5-55	0xF537	HDO polarity	Ones: HDO 0: Normal 1: Absolute value 2: Negated value 3: Negated absolute value	0	-	Changeable at any time
F5-56	0xF538	HDO hardware source	0: Output function 1: Force value	0	-	Changeable at any time
F5-57	0xF539	HDO force setpoint	0.00% to 100.00%	0.00	%	Changeable at any time
F6-00	0xF600	Startup mode	0: Direct start 1: Flying start 2: Pre-excitation start (AC asynchronous motor) 3: SVC quick start	0	-	Changeable at any time
F6-01	0xF601	Speed tracking mode	0: From the stop frequency 1: From the power frequency 2: From the maximum frequency 3: Reserved 4: Magnetic field directional speed tracking (MD290)	0	-	Changeable at any time
F6-02	0xF602	Speed of speed tracking	1 to 100	20	-	Changeable at any time
F6-03	0xF603	Startup frequency	0.00 Hz to 10.00 Hz	0.00	Hz	Changeable at any time
F6-04	0xF604	Startup frequency hold time	0.0s to 100.0s	0.0	s	Changeable only at stop
F6-05	0xF605	DC braking current at startup	0% to 100%	50	%	Changeable only at stop
F6-06	0xF606	DC braking time at startup	0.0s to 100.0s	0.0	s	Changeable only at stop
F6-07	0xF607	Acceleration/ Deceleration mode	0: Straight-line acceleration/deceleration 1: S-curve acceleration/deceleration	0	-	Changeable only at stop
F6-08	0xF608	Time proportion of S-curve start segment	0.0% to +100.0%	30.0	%	Changeable only at stop
F6-09	0xF609	Time proportion of S-curve end segment	0.0% to +100.0%	30.0	%	Changeable only at stop
F6-10	0xF60A	Stop mode	0: Decelerate to stop 1: Coast to stop 2: Stop at maximum capability	0	-	Changeable at any time
F6-11	0xF60B	Start frequency of DC braking at stop	0.00 Hz to F0-10	0.00	Hz	Changeable at any time
F6-12	0xF60C	DC braking delay at stop	0.0s to 100.0s	0.0	s	Changeable at any time

Para.	Comm. Addr.	Name	Reference	De fault	Unit	Change
F6-13	0xF60D	DC braking current at stop	0% to 100%	50	%	Changeable at any time
F6-14	0xF60E	DC braking time at stop	0.0s to 100.0s	0.0	s	Changeable at any time
F6-15	0xF60F	Braking transistor usage	0% to 100%	100	%	Changeable at any time
F6-16	0xF610	Speed tracking sweep current limit closed loop Kp	0 to 1000	500	-	Changeable at any time
F6-17	0xF611	Speed tracking sweep current limit closed loop Ki	0 to 1000	800	-	Changeable at any time
F6-18	0xF612	Speed tracking current	30% to 200%	80	%	Changeable only at stop
F6-19	0xF613	Current loop multiple	10% to 600%	100	%	Changeable at any time
F6-20	0xF614	S-curve setting mode	0: Symmetrical mode 1: Separate setting of acceleration and deceleration arcs	0	-	Changeable only at stop
F6-21	0xF615	Demagnetization time (valid for asynchronous motors)	0.00s to 5.00s	0.50	s	Changeable at any time
F6-23	0xF617	Overexcitation enable	0: Disabled 2: Enabled during deceleration 3: Enabled always	0	-	Changeable at any time
F6-24	0xF618	Overexcitation suppression current	0% to 150%	100	%	Changeable at any time
F6-25	0xF619	Overexcitation gain	0.01 to 2.50	1.25	-	Changeable at any time
F6-26	0xF61A	Forced switch-on of braking transistor	0: Switch-off 1: Switch-on	0	-	Changeable only at stop
F6-28	0xF61C	Manual self-check enable	Bit00: IGBT shoot-through self-check upon startup 0: Disabled 1: Enabled Bit01: Short-to-ground self-check upon startup 0: Disabled 1: Enabled Bit02: Phase loss self-check upon startup 0: Disabled 1: Enabled Bit03: Reserved	0x7	-	Changeable only at stop
F6-29	0xF61D	Manual self-check command	0: None 1: Static self-check 2: Full self-check	0	-	Changeable only at stop

Para.	Comm. Addr.	Name	Reference	De fault	Unit	Change
F7-00	0xF700	LED segment missing check	0: Disabled 1: All indicators of the LED operating panel are steady on. 2: All indicators of the LED operating panel are off. 3: All indicators of the LED operating panel blink.	0	-	Changeable only at stop
F7-01	0xF701	MF.K key function	0: MF.K key disabled 1: Forced operating panel control 2: Switchover between forward and reverse run 3: Forward jog 4: Reverse jog	0	-	Changeable only at stop
F7-02	0xF702	STOP/RESET key function	0: Valid only under operating panel control 1: Valid under any control (OFF1) 2: Valid under any control (OFF2) 3: Valid under any control (OFF3)	1	-	Changeable at any time
F7-03	0xF703	LED display 1 in running state	Bit00: Running frequency (Hz) Bit01: Reference frequency (Hz) Bit02: Bus voltage (V) Bit03: Output voltage (V) Bit04: Output current (A) Bit05: Output power (kW) Bit06: Output torque (%) Bit07: DI state Bit08: DO state Bit09: AI1 voltage (V) Bit10: AI2 voltage (V) Bit11: AI3 voltage (V) Bit12: Count value Bit13: Length value Bit14: Load speed Bit15: PID reference	0x1F	-	Changeable at any time
F7-04	0xF704	LED display 2 in running state	Bit00: PID feedback Bit01: PLC stage Bit02: Input pulse frequency (kHz) Bit03: Running frequency 2 (Hz) Bit04: Remaining running time Bit05: AI1 voltage before correction (V) Bit06: Free mapping 0 Bit07: Free mapping 1 Bit08: Motor speed Bit09: Current power-on duration (Hour) Bit10: Current running duration (min) Bit11: Input pulse frequency (Hz) Bit12: Communication setpoint Bit13: Encoder feedback speed Bit14: Main frequency X Bit15: Auxiliary frequency Y	0x0	-	Changeable at any time

Para.	Comm. Addr.	Name	Reference	De fault	Unit	Change
F7-05	0xF705	LED display in stop state	Bit00: Reference frequency (Hz) Bit01: Bus voltage (V) Bit02: DI state Bit03: DO state Bit04: AI1 voltage (V) Bit05: AI2 voltage (V) Bit06: AI3 voltage (V) Bit07: Count value Bit08: Length value Bit09: PLC stage Bit10: Load speed Bit11: PID reference Bit12: Input pulse frequency (kHz) Bit13: Reserved Bit14: Free mapping 0 Bit15: Free mapping 1	0x33	-	Changeable at any time
F7-06	0xF706	Load speed display coefficient	1.0E-4 to 6.5000	1.0000	-	Changeable at any time
F7-07	0xF707	IGBT heatsink temperature	–20°C to +120°C	0	°C	Unchangeable
F7-08	0xF708	Product SN	0 to 65535	0	-	Unchangeable
F7-09	0xF709	Accumulative running duration (hour)	0 h to 65535 h	0	h	Unchangeable
F7-10	0xF70A	Performance software version	0.00 to 655.35	0.00	-	Unchangeable
F7-11	0xF70B	Function software version	0.00 to 655.35	0.00	-	Unchangeable
F7-12	0xF70C	Number of decimal places for load speed display	Ones: Decimal places of U0-14/U0-24 0: No decimal place 1: One decimal place 2: Two decimal places Tens: Decimal places of U0-19/U0-29 0: No decimal place 1: One decimal place 2: Two decimal places Hundreds: Decimal places of U0-30/U0-31 0: No decimal place 1: One decimal place 2: Two decimal places	220	-	Changeable at any time
F7-13	0xF70D	Accumulative power-on duration (hour)	0 h to 65535 h	0	h	Unchangeable
F7-14	0xF70E	Accumulative power consumption	0 kW·h to 65535 kW·h	0	kW·h	Unchangeable

Para.	Comm. Addr.	Name	Reference	Default	Unit	Change
F7-15	0xF70F	Temporary performance software version	0.00 to 655.35	0.00	-	Unchangeable
F7-16	0xF710	Temporary function software version	0.00 to 655.35	0.00	-	Unchangeable
F7-17	0xF711	Low-order bits of level-0 menu display address	0: Invalid address Others: K connector	0	-	Changeable at any time
F7-18	0xF712	High-order bits of level-0 menu display address	0: Invalid address Others: K connector	0	-	Changeable at any time
F7-19	0xF713	Low-order bits of level-0 menu display format	Ones: Unit 0: None 1: HZ 2: A 3: RPM 4: V 5: Link 6: % 7: s 8: h 9: kW 10: kW/h 11: °C Tens: Decimal places 0: No decimal place 1: One decimal place 2: Two decimal places 3: Three decimal places 4: Four decimal places Hundreds: Enable 0: Disabled 1: Enabled	0x0	-	Changeable at any time

Para.	Comm. Addr.	Name	Reference	De fault	Unit	Change
F7-20	0xF714	High-order bits of level-0 menu display format	Ones: Unit 0: None 1: HZ 2: A 3: RPM 4: V 5: Link 6: % 7: s 8: h 9: kW 10: kW/h 11: °C Tens: Decimal places 0: No decimal place 1: One decimal place 2: Two decimal places 3: Three decimal places 4: Four decimal places Hundreds: Enable 0: Disabled 1: Enabled	0x0	-	Changeable at any time
F7-21	0xF715	LED operating panel key test	0: Disabled 1: Enabled	0	-	Changeable only at stop
F7-22	0xF716	LED display update cycle	10 to 300	10	-	Changeable at any time
F7-23	0xF717	LED display of direction	Ones: Direction display at stop 0: Not displayed 1: Displayed Tens: Reserved 0: Reserved 1: Reserved	1	-	Changeable at any time
F7-24	0xF718	Decimal places of floating-point connector values after conversion	0: Two decimal places 1: One decimal place	1	-	Changeable at any time
F7-25	0xF719	Fault display	0 to 1	0	-	Changeable at any time
F7-26	0xF71A	Storage of LED display in running state	0 to 31	0	-	Unchangeable
F7-27	0xF71B	Storage of LED display in stop state	0 to 15	0	-	Unchangeable
F7-28	0xF71C	Accumulative running duration (second)	0s to 3599s	0	s	Unchangeable

Para.	Comm. Addr.	Name	Reference	De fault	Unit	Change
F7-29	0xF71D	Accumulative power-on duration (second)	0s to 3599s	0	s	Unchangeable
F7-30	0xF71E	Auxiliary calculation of accumulative power consumption	0 to 65535	0	-	Unchangeable
F7-31	0xF71F	Auxiliary calculation of accumulative power consumption of group U0	0 to 65535	0	-	Unchangeable
F7-32	0xF720	Low-order bits of accumulative power consumption	0.0 kW·h to 6553.5 kW·h	0.0	kW·h	Unchangeable
F7-33	0xF721	High-order bits of accumulative power consumption	0 kW·h to 65535 kW·h	0	kW·h	Unchangeable
F8-00	0xF800	Jog frequency	0.00 Hz to F0-10	2.00	Hz	Changeable at any time
F8-01	0xF801	Jog acceleration time	0.0s to 6500.0s	20.0	s	Changeable at any time
F8-02	0xF802	Jog deceleration time	0.0s to 6500.0s	20.0	s	Changeable at any time
F8-03	0xF803	Acceleration time 2	0.0s to 6500.0s	0.0	s	Changeable at any time
F8-04	0xF804	Deceleration time 2	0.0s to 6500.0s	0.0	s	Changeable at any time
F8-05	0xF805	Acceleration time 3	0.0s to 6500.0s	0.0	s	Changeable at any time
F8-06	0xF806	Deceleration time 3	0.0s to 6500.0s	0.0	s	Changeable at any time
F8-07	0xF807	Acceleration time 4	0.0s to 6500.0s	0.0	s	Changeable at any time
F8-08	0xF808	Deceleration time 4	0.0s to 6500.0s	0.0	s	Changeable at any time
F8-09	0xF809	Skip frequency 1	0.00 Hz to F0-10	0.00	Hz	Changeable at any time
F8-10	0xF80A	Skip frequency 2	0.00 Hz to F0-10	0.00	Hz	Changeable at any time
F8-11	0xF80B	Skip frequency band	0.00 Hz to F0-10	0.00	Hz	Changeable at any time
F8-12	0xF80C	FWD/REV switchover deadzone time	0.0s to 3000.0s	0.0	s	Changeable at any time
F8-13	0xF80D	Reverse frequency inhibition	0: Disabled 1: Enabled	0	-	Changeable at any time

Para.	Comm. Addr.	Name	Reference	De fault	Unit	Change
F8-14	0xF80E	Running mode when frequency reference below lower limit	0: Run at frequency lower limit 1: Stop 2: Run at zero speed 3: Coast to stop	0	-	Changeable at any time
F8-15	0xF80F	Droop rate	0.00% to 10.00%	0.00	%	Changeable at any time
F8-16	0xF810	Power-on duration threshold (hour)	0 h to 65535 h	0	h	Changeable at any time
F8-17	0xF811	Running duration threshold (hour)	0 h to 65535 h	0	h	Changeable at any time
F8-18	0xF812	Startup protection	0: Disabled 1: Enabled	1	-	Changeable at any time
F8-19	0xF813	Frequency detection value (FDT1)	0.00 Hz to F0-10	50.00	Hz	Changeable at any time
F8-20	0xF814	Frequency detection hysteresis (FDT1)	0.0% to +100.0%	5.0	%	Changeable at any time
F8-21	0xF815	Frequency reach detection range	0.0% to +100.0%	0.0	%	Changeable at any time
F8-22	0xF816	Skip frequency enable during acceleration/ deceleration	0: Disabled 1: Enabled	0	-	Changeable at any time
F8-25	0xF819	Switchover frequency of acceleration time 1 and acceleration time 2	0.00 Hz to F0-10	0.00	Hz	Changeable at any time
F8-26	0xF81A	Switchover frequency of deceleration time 1 and deceleration time 2	0.00 Hz to F0-10	0.00	Hz	Changeable at any time
F8-27	0xF81B	Jog priority mode	0: No priority 1: Jog preferred 2: OFF1 preferred	0	-	Changeable at any time
F8-28	0xF81C	Frequency detection value (FDT2 level)	0.00 Hz to F0-10	50.00	Hz	Changeable at any time
F8-29	0xF81D	Frequency detection hysteresis (FDT2)	0.0% to +100.0%	5.0	%	Changeable at any time
F8-30	0xF81E	Frequency reach detection value 1	0.00 Hz to F0-10	50.00	Hz	Changeable at any time

Para.	Comm. Addr.	Name	Reference	De fault	Unit	Change
F8-31	0xF81F	Frequency reach detection range 1	0.1% to +100.0%	0.1	%	Changeable at any time
F8-32	0xF820	Frequency reach detection value 2	0.00 Hz to F0-10	50.00	Hz	Changeable at any time
F8-33	0xF821	Frequency reach detection range 2	0.1% to +100.0%	0.1	%	Changeable at any time
F8-34	0xF822	Zero current detection level	0.0% to 300.0%	5.0	%	Changeable at any time
F8-35	0xF823	Zero current detection delay	0.01s to 600.00s	0.10	s	Changeable at any time
F8-36	0xF824	Output overcurrent threshold	0.0% to 300.0%	5.0	%	Changeable at any time
F8-37	0xF825	Output overcurrent detection delay	0.00s to 600.00s	0.00	s	Changeable at any time
F8-38	0xF826	Detection level of current 1	0.0% to 300.0%	100.0	%	Changeable at any time
F8-39	0xF827	Detection width of current 1	0.0% to 300.0%	0.0	%	Changeable at any time
F8-40	0xF828	Detection level of current 2	0.0% to 300.0%	100.0	%	Changeable at any time
F8-41	0xF829	Detection width of current 2	0.0% to 300.0%	0.0	%	Changeable at any time
F8-42	0xF82A	Timing function	0: Disabled 1: Enabled	0	-	Changeable only at stop
F8-43	0xF82B	Timing duration source	0: F8-44 1: AI1 2: AI2 3: AI3 Others: F connector	0	-	Changeable only at stop
F8-44	0xF82C	Timing duration	0.0 min to 6500.0 min	0.0	min	Changeable only at stop
F8-45	0xF82D	AI1 input voltage lower limit	0.00 V to F8-46	3.10	V	Changeable at any time
F8-46	0xF82E	AI1 input voltage upper limit	F8-45 to 10.00 V	6.80	V	Changeable at any time
F8-47	0xF82F	IGBT temperature reach (threshold)	0°C to 100°C	75	°C	Changeable at any time
F8-48	0xF830	Cooling fan control	0: Working during AC drive running 1: Working always	0	-	Changeable at any time
F8-49	0xF831	Wakeup frequency	F8-51 to F0-10	0.00	Hz	Changeable at any time
F8-50	0xF832	Wakeup delay	0.0s to 6500.0s	0.0	s	Changeable at any time

Para.	Comm. Addr.	Name	Reference	De fault	Unit	Change
F8-51	0xF833	Hibernation frequency	0.00 Hz to F8-49	0.00	Hz	Changeable at any time
F8-52	0xF834	Hibernation delay	0.0s to 6500.0s	0.0	s	Changeable at any time
F8-53	0xF835	Current running duration threshold	0.0 min to 6500.0 min	0.0	min	Changeable only at stop
F8-54	0xF836	Output power correction coefficient	0.0% to 200.0%	100.0	%	Changeable at any time
F8-55	0xF837	Deceleration time for quick stop	0.0s to 6500.0s	0.0	s	Changeable at any time
F8-56	0xF838	Real-time target speed source	0: RFG output (default) 1: AI1 2: AI2 3: AI3 4: Pulse reference 5: Communication 6: Multi-reference 7: Motor-driven potentiometer 8: PID Others: F connector	0	-	Changeable only at stop
F8-57	0xF839	Undervoltage percentage for storage upon undervoltage	70% to 120%	100	%	Changeable at any time
F8-58	0xF83A	Number of E2P operations per unit time	0 to 100	0	-	Changeable at any time
F8-59	0xF83B	DI force function	0: The DI functions of group F4 are not enforced. (you need to set the corresponding function connection parameter to 2 to activate the DI function) 1: The DI functions of group F4 are enforced.	1	-	Changeable at any time
F8-60	0xF83C	Main status word 1	0: Invalid 1: Set to 1 Others: B connector	0	-	Changeable at any time
F8-61	0xF83D	Main status word 2	0: Invalid 1: Set to 1 Others: B connector	0	-	Changeable at any time
F8-62	0xF83E	Target speed reach hysteresis	0.0% to 600.0%	3.0	%	Changeable at any time
F8-63	0xF83F	Target speed reach time	0.00s to 100.00s	3.00	s	Changeable at any time
F8-64	0xF840	Speed comparison reach threshold 1	0.0% to 600.0%	100.0	%	Changeable at any time

Para.	Comm. Addr.	Name	Reference	De fault	Unit	Change
F8-65	0xF841	Speed comparison reach hysteresis 1	0.0% to 600.0%	3.0	%	Changeable at any time
F8-66	0xF842	Speed comparison reach time 1	0.00s to 100.00s	3.00	s	Changeable at any time
F8-67	0xF843	Speed comparison reach threshold 2	0.0% to 600.0%	100.0	%	Changeable at any time
F8-68	0xF844	Speed comparison reach hysteresis 2	0.0% to 600.0%	3.0	%	Changeable at any time
F8-69	0xF845	Speed comparison reach time 2	0.00s to 100.00s	3.00	s	Changeable at any time
F8-72	0xF848	Skip frequency 3	0.00 Hz to F0-10	0.00	Hz	Changeable at any time
F8-73	0xF849	Skip frequency 4	0.00 Hz to F0-10	0.00	Hz	Changeable at any time
F8-74	0xF84A	Power-on duration threshold (second)	0s to 3599s	0	s	Changeable at any time
F8-75	0xF84B	Running duration threshold (second)	0s to 3599s	0	s	Changeable at any time
F9-00	0xF900	Motor overload protection	0: Disabled 1: Enabled	1	-	Changeable at any time
F9-01	0xF901	Motor overload protection gain	0.20 to 10.00	1.00	-	Changeable at any time
F9-02	0xF902	Motor overload pre-warning coefficient	50% to 100%	80	%	Changeable at any time
F9-03	0xF903	Overvoltage stall suppression gain	1 to 100	30	-	Changeable at any time
F9-04	0xF904	Overvoltage stall protection voltage	330.0 V to 800.0 V	770.0	V	Changeable at any time
F9-07	0xF907	Short-to-ground detection	Ones: Short-to-ground detection upon power-on 0: Disabled 1: Enabled Tens: Short-to-ground detection before running 0: Disabled 1: Enabled	1	-	Changeable at any time
F9-08	0xF908	Braking unit applied voltage	330.0 V to 800.0 V	760.0	V	Changeable only at stop
F9-09	0xF909	Auto reset attempts	0 to 100	0	-	Changeable at any time
F9-10	0xF90A	Relay action during auto reset	0: Disabled 1: Enabled	0	-	Changeable at any time
F9-11	0xF90B	Auto reset interval	0.1s to 600.0s	1.0	s	Changeable at any time

Para.	Comm. Addr.	Name	Reference	Default	Unit	Change
F9-12	0xF90C	Input phase loss/ Contactor pickup protection	Ones: Input phase loss protection 0: Disabled 1: Protection enabled when both software and hardware input phase loss conditions are met 2: Protection enabled when software input phase loss conditions are met 3: Protection enabled when hardware input phase loss conditions are met Tens: Contactor pickup protection 0: Disabled 1: Enabled	11	-	Changeable at any time
F9-13	0xF90D	Output phase loss protection	Ones: Output phase loss protection during running 0: Disabled 1: Enabled Tens: Output phase loss protection before running 0: Disabled 1: Enabled	1	-	Changeable at any time
F9-14	0xF90E	1st fault type	0: No fault 1: Reserved 2: Overcurrent (Err02) 5: Overvoltage (Err05) 8: Pre-charge resistor overload (Err08) 9: Undervoltage (Err09) 10: AC drive overload (Err10) 11: Motor overload (Err11) 12: Input phase loss (Err12) 13: Output phase loss (Err13) 14: IGBT overheat (Err14) 15: External fault (Err15) 16: Communication exception (Err16) 17: Contactor exception (Err17) 18: Current detection exception (Err18) 19: Motor auto-tuning exception (Err19) 20: Encoder/PG card exception 21: Parameter read/write exception (Err21) 22: Encoder card exception (Err22) 23: Motor short-to-ground (Err23) 26: Accumulative running duration reach (Err26) 27: User-defined fault 28: User-defined alarm 29: Accumulative power-on duration reach (Err29) 30: Load loss (Err30) 31: PID feedback loss (Err31) 32: Parameter exception (Err32)	0	-	Unchangeable

Para.	Comm. Addr.	Name	Reference	Default	Unit	Change
(Continued)	(Continued)	(Continued)	40: Pulse-by-pulse current limit fault (Err40) 41: Reserved (Err41) 42: Excessive speed deviation (Err42) 43: Motor overspeed (Err43) 45: Motor overtemperature (Err45) 47: STO fault (Err47) 55: Slave fault under master-slave control (Err55) 56: Self-check fault (Err56) 57: IGBT fault (Err57) 58: Hardware sensor fault (Err58) 59: Two-phase imbalance (Err59) 61: Braking overload (Err61) 62: Braking module exception (Err62) 63: External alarm (Err63) 82: Pre-charge contactor feedback exception (Err82) 85: Timing exception (Err85) 93: Motor control exception (Err93) 94: Motor parameter exception (Err94) 169: Fault reset fault (Err169) 174: Wire breakage (Err174)			
F9-15	0xF90F	2nd fault type	Same as F9-15	0	-	Unchangeable
F9-16	0xF910	3rd (latest) fault type	Same as F9-15	0	-	Unchangeable
F9-17	0xF911	Frequency upon the 3rd (latest) fault	0.00 Hz to 655.35 Hz	0.00	Hz	Unchangeable
F9-18	0xF912	Current upon the 3rd (latest) fault	0.00 A to 655.35 A	0.00	A	Unchangeable
F9-19	0xF913	Bus voltage upon the 3rd (latest) fault	0.0 V to 6553.5 V	0.0	V	Unchangeable
F9-20	0xF914	DI state upon the 3rd (latest) fault	0x0 to 0xFFFF	0x0	-	Unchangeable
F9-21	0xF915	DO state upon the 3rd (latest) fault	0x0 to 0xFFFF	0x0	-	Unchangeable
F9-22	0xF916	AC drive state upon the 3rd (latest) fault	0 to 65535	0	-	Unchangeable
F9-23	0xF917	Power-on duration upon the 3rd (latest) fault	0 min to 65535 min	0	min	Unchangeable
F9-24	0xF918	Running duration upon the 3rd (latest) fault	0.0 min to 6553.5 min	0.0	min	Unchangeable
F9-25	0xF919	Status word A upon the 3rd (latest) fault	0x0 to 0xFFFF	0x0	-	Unchangeable

Para.	Comm. Addr.	Name	Reference	De fault	Unit	Change
F9-26	0xF91A	Status word B upon the 3rd (latest) fault	0x0 to 0xFFFF	0x0	-	Unchangea ble
F9-27	0xF91B	Frequency upon the 2nd fault	0.00 Hz to 655.35 Hz	0.00	Hz	Unchangea ble
F9-28	0xF91C	Current upon the 2nd fault	0.00 A to 655.35 A	0.00	A	Unchangea ble
F9-29	0xF91D	Bus voltage upon the 2nd fault	0.0 V to 6553.5 V	0.0	V	Unchangea ble
F9-30	0xF91E	DI state upon the 2nd fault	0x0 to 0xFFFF	0x0	-	Unchangea ble
F9-31	0xF91F	DO state upon the 2nd fault	0x0 to 0xFFFF	0x0	-	Unchangea ble
F9-32	0xF920	AC drive state upon the 2nd fault	0 to 65535	0	-	Unchangea ble
F9-33	0xF921	Power-on duration upon the 2nd fault	0 min to 65535 min	0	min	Unchangea ble
F9-34	0xF922	Running duration upon the 2nd fault	0.0 min to 6553.5 min	0.0	min	Unchangea ble
F9-35	0xF923	Status word A upon the 2nd fault	0x0 to 0xFFFF	0x0	-	Unchangea ble
F9-36	0xF924	Status word B upon the 2nd fault	0x0 to 0xFFFF	0x0	-	Unchangea ble
F9-37	0xF925	Frequency upon the 1st fault	0.00 Hz to 655.35 Hz	0.00	Hz	Unchangea ble
F9-38	0xF926	Current upon the 1st fault	0.00 A to 655.35 A	0.00	A	Unchangea ble
F9-39	0xF927	Bus voltage upon the 1st fault	0.0 V to 6553.5 V	0.0	V	Unchangea ble
F9-40	0xF928	DI state upon the 1st fault	0x0 to 0xFFFF	0x0	-	Unchangea ble
F9-41	0xF929	DO state upon the 1st fault	0x0 to 0xFFFF	0x0	-	Unchangea ble
F9-42	0xF92A	AC drive state upon the 1st fault	0 to 65535	0	-	Unchangea ble
F9-43	0xF92B	Power-on duration upon the 1st fault	0 min to 65535 min	0	min	Unchangea ble
F9-44	0xF92C	Running duration upon the 1st fault	0.0 min to 6553.5 min	0.0	min	Unchangea ble
F9-45	0xF92D	Status word A upon the 1st fault	0x0 to 0xFFFF	0x0	-	Unchangea ble
F9-46	0xF92E	Status word B upon the 1st fault	0x0 to 0xFFFF	0x0	-	Unchangea ble

Para.	Comm. Addr.	Name	Reference	Default	Unit	Change
F9-47	0xF92F	Fault protection action selection 1	Ones: Motor overload (Err11) 0: Coast to stop 1: Stop according to the stop mode 2: Continue to run 3: Run with power limit 4: Run with current limit 5: Ignore Tens: Input phase loss (Err12) 0: Coast to stop 1: Stop according to the stop mode 2: Continue to run 3: Run with power limit 4: Run with current limit 5: Ignore Hundreds: Output phase loss (Err13) 0: Coast to stop 1: Stop according to the stop mode 2: Continue to run 3: Run with power limit 4: Run with current limit Thousands: External fault (Err15) 0: Coast to stop 1: Stop according to the stop mode 2: Continue to run 3: Run with power limit 4: Run with current limit Ten thousands: Reserved	0	-	Changeable at any time
F9-48	0xF930	Fault protection action selection 2	Ones: Encoder/PG card exception (Err20) 0: Coast to stop 1: Stop according to the stop mode 2: Continue to run 3: Run with power limit 4: Run with current limit 5: Ignore Tens: Parameter read/write exception (Err21) 0: Coast to stop 1: Stop according to the stop mode Hundreds: Reserved (Err24) 0: Coast to stop Thousands: Reserved (Err25) 0: Coast to stop Ten thousands: Running duration reach (Err26) 0: Coast to stop 1: Stop according to the stop mode 2: Continue to run 3: Run with power limit 4: Run with current limit	0	-	Changeable at any time

Para.	Comm. Addr.	Name	Reference	De fault	Unit	Change
F9-49	0xF931	Fault protection action selection 3	Ones: User-defined fault 1 (Err27) 0: Coast to stop 1: Stop according to the stop mode 2: Continue to run 3: Run with power limit 4: Run with current limit Tens: User-defined fault 2 (Err28) 0: Coast to stop 1: Stop according to the stop mode 2: Continue to run 3: Run with power limit 4: Run with current limit Hundreds: Power-on duration reach (Err29) 0: Coast to stop 1: Stop according to the stop mode 2: Continue to run 3: Run with power limit 4: Run with current limit Thousands: Load loss (Err30) 0: Coast to stop 1: Stop according to the stop mode 2: Continue to run 3: Run with power limit 4: Run with current limit 5: Ignore Ten thousands: PID loss during running (Err31) 0: Coast to stop 1: Stop according to the stop mode 2: Continue to run 3: Run with power limit 4: Run with current limit	220	-	Changeable at any time
F9-50	0xF932	Fault protection action selection 4	Ones: Excessive speed deviation (Err42) 0: Coast to stop 1: Stop according to the stop mode 2: Continue to run 3: Run with power limit 4: Run with current limit 5: Ignore Tens: Motor overspeed (Err43) 0: Coast to stop 1: Stop according to the stop mode 2: Continue to run 3: Run with power limit 4: Run with current limit 5: Ignore Thousands: Magnetic pole position auto-tuning error (Err55) 0: Coast to stop	2	-	Changeable at any time

Para.	Comm. Addr.	Name	Reference	De fault	Unit	Change
F9-51	0xF933	Fault protection action selection 5	Ones: Modbus timeout (Err160) 0: Coast to stop 1: Stop according to the stop mode 2: Continue to run 3: Run with power limit 4: Run with current limit 5: Ignore Tens: CANOpen fault (Err161) 0: Coast to stop 1: Stop according to the stop mode 2: Continue to run 3: Run with power limit 4: Run with current limit 5: Ignore Hundreds: CANlink fault (Err162) 0: Coast to stop 1: Stop according to the stop mode 2: Continue to run 3: Run with power limit 4: Run with current limit 5: Ignore Thousands: Reserved Ten thousands: Expansion card fault (Err164) 0: Coast to stop 1: Stop according to the stop mode 2: Continue to run 3: Run with power limit 4: Run with current limit 5: Ignore	10111	-	Changeable at any time
F9-54	0xF936	Frequency for continuing to run upon fault	0: Current running frequency 1: Frequency reference 2: Frequency upper limit 3: Frequency lower limit 4: Alternative frequency upon exception	1	-	Changeable at any time
F9-55	0xF937	Alternative frequency upon exception	0.0% to +100.0%	100.0	%	Changeable at any time
F9-56	0xF938	AI3 temperature mode - motor temperature sensor type	0: No temperature sensor (AI channel used as analog input) 1: PT100 2: PT1000	0	-	Changeable at any time
F9-57	0xF939	AI3 temperature mode - motor overheat protection threshold	F9-58 to 200°C	110	°C	Changeable at any time

Para.	Comm. Addr.	Name	Reference	De fault	Unit	Change
F9-58	0xF93A	AI3 temperature mode - motor overheat pre-warning threshold	0°C to F9-57	90	°C	Changeable at any time
F9-59	0xF93B	Power dip ride-through	0: Disabled 1: Decelerate 2: Decelerate to stop 3: Suppress voltage dip	0	-	Changeable only at stop
F9-60	0xF93C	Voltage threshold for disabling power dip ride-through	80% to 100%	85	%	Changeable only at stop
F9-61	0xF93D	Delay of voltage recovery from power dip	0.0s to 100.0s	0.5	s	Changeable only at stop
F9-62	0xF93E	Voltage threshold for enabling power dip ride-through	60% to 100%	80	%	Changeable only at stop
F9-63	0xF93F	Protection upon load loss	0: Disabled 1: Enabled	0	-	Changeable at any time
F9-64	0xF940	Load loss detection level	0.0% to +100.0%	10.0	%	Changeable at any time
F9-65	0xF941	Load loss detection time	0.0s to 60.0s	1.0	s	Changeable at any time
F9-67	0xF943	Overspeed detection level	0.0% to 50.0%	20.0	%	Changeable at any time
F9-68	0xF944	Overspeed detection time	0.0s to 60.0s	1.0	s	Changeable at any time
F9-69	0xF945	Detection level of excessive speed deviation	0.0% to 50.0%	20.0	%	Changeable at any time
F9-70	0xF946	Detection time of excessive speed deviation	0.0s to 60.0s	5.0	s	Changeable at any time
F9-71	0xF947	Power dip ride-through gain Kp	1 to 100	40	-	Changeable at any time
F9-72	0xF948	Power dip ride-through integral coefficient Ki	1 to 100	30	-	Changeable at any time
F9-73	0xF949	Deceleration time of power dip ride-through	0.0s to 300.0s	20.0	s	Changeable at any time
F9-74	0xF94A	Voltage dip suppression time	0.1s to 600.0s	0.5	s	Changeable at any time

Para.	Comm. Addr.	Name	Reference	De fault	Unit	Change
F9-75	0xF94B	AI2 temperature mode - motor temperature sensor type	0: No temperature sensor (AI channel used as analog input) 1: PT100 2: PT1000 3: KTY84-130 4: PTC130	0	-	Changeable at any time
F9-76	0xF94C	AI2 temperature mode - motor overheat protection threshold	F9-77 to 200°C	110	°C	Changeable at any time
F9-77	0xF94D	AI2 temperature mode - motor overheat pre-warning threshold	0°C to F9-76	90	°C	Changeable at any time
F9-78	0xF94E	AI2 temperature mode - motor temperature reach	0°C to 100°C	75	°C	Changeable at any time
F9-79	0xF94F	Auto reset of STO state	0: Manual reset 1: Auto reset	0	-	Changeable at any time
F9-80	0xF950	AI3 temperature mode - motor temperature reach	0°C to 100°C	75	°C	Changeable at any time
FA-00	0xFA00	PID reference source	0: FA-01 1: AI1 2: AI2 3: AI3 4: Pulse input (DI5) 5: Communication 6: Multi-reference Others: F connector	0	-	Changeable at any time
FA-01	0xFA01	PID reference	0.0% to +100.0%	50.0	%	Changeable at any time
FA-02	0xFA02	PID feedback source	0: AI1 1: AI2 2: AI3 3: AI1-AI2 4: Pulse reference (DIO1) 5: Communication 6: AI1+AI2 7: MAX(|AI1|, |AI2|) 8: Min(|AI1|, |AI2|) Others: F connector	0	-	Changeable at any time
FA-03	0xFA03	PID action direction	0: Forward 1: Reverse Others: B connector	0	-	Changeable at any time
FA-04	0xFA04	PID reference and feedback range	0 to 65535	1000	-	Changeable at any time

Para.	Comm. Addr.	Name	Reference	De fault	Unit	Change
FA-05	0xFA05	Proportional gain Kp1	0.0 to 1000.0	20.0	-	Changeable at any time
FA-06	0xFA06	Integral time Ti1	0.01s to 10.00s	2.00	s	Changeable at any time
FA-07	0xFA07	Derivative time Td1	0.000s to 10.000s	0.000	s	Changeable at any time
FA-08	0xFA08	PID cut-off frequency in reverse direction	0.00 Hz to F0-10	2.00	Hz	Changeable at any time
FA-09	0xFA09	PID deviation limit	0.0% to +100.0%	0.0	%	Changeable at any time
FA-10	0xFA0A	PID derivative limit	0.00% to 100.00%	0.10	%	Changeable at any time
FA-11	0xFA0B	PID reference change time	0.00s to 650.00s	0.00	s	Changeable at any time
FA-12	0xFA0C	PID feedback filter time	0.00s to 60.00s	0.00	s	Changeable at any time
FA-13	0xFA0D	PID output filter time	0.00s to 60.00s	0.00	s	Changeable at any time
FA-15	0xFA0F	Proportional gain Kp2	0.0 to 1000.0	20.0	-	Changeable at any time
FA-16	0xFA10	Integral time Ti2	0.01s to 10.00s	2.00	s	Changeable at any time
FA-17	0xFA11	Derivative time Td2	0.000s to 10.000s	0.000	s	Changeable at any time
FA-18	0xFA12	PID parameter switchover condition	0: No switchover 1: Switchover by DI 2: Automatic switchover based on deviation 3: Automatic switchover based on running frequency	0	-	Changeable at any time
FA-19	0xFA13	PID parameter switchover deviation 1	0.0% to FA-20	20.0	%	Changeable at any time
FA-20	0xFA14	PID parameter switchover deviation 2	FA-19 to 100.0%	80.0	%	Changeable at any time
FA-21	0xFA15	PID initial value	0.0% to +100.0%	0.0	%	Changeable at any time
FA-22	0xFA16	Hold time of PID initial value	0.00s to 650.00s	0.00	s	Changeable at any time
FA-23	0xFA17	Maximum deviation between two PID outputs	0.00% to 100.00%	1.00	%	Changeable at any time

Para.	Comm. Addr.	Name	Reference	De fault	Unit	Change
FA-24	0xFA18	Minimum deviation between two PID outputs	0.00% to 100.00%	1.00	%	Changeable at any time
FA-25	0xFA19	PID integral property	Ones: Integral separation 0: Disabled 1: Enabled Tens: Whether to stop integration when the output reaches the limit 0: Continue integration 1: Stop integration	10	-	Changeable at any time
FA-26	0xFA1A	Lower threshold of detection on feedback loss	0.0% to +100.0%	0.0	%	Changeable at any time
FA-27	0xFA1B	PID feedback loss detection time	0.0s to 20.0s	0.0	s	Changeable at any time
FA-28	0xFA1C	PID operation at stop	0: Disabled 1: Enabled Others: B connector	0	-	Changeable at any time
FA-29	0xFA1D	Upper threshold of detection on feedback loss	0.0% to +100.0%	100.0	%	Changeable at any time
FA-30	0xFA1E	Source of maximum output	0: [1] 1: AI1 2: AI2 3: AI3 4: Pulse reference 5: Communication 6: Multi-reference 7: Motor-driven potentiometer 8: PID Others: F connector	0	-	Changeable at any time
FA-31	0xFA1F	Source of minimum output	0: [0] 1: AI1 2: AI2 3: AI3 4: Pulse reference 5: Communication 6: Multi-reference 7: Motor-driven potentiometer 8: PID Others: F connector	0	-	Changeable at any time
FA-32	0xFA20	Forced output value	Same as FA-31	0	-	Changeable at any time
FA-33	0xFA21	Forced output assignment	0: Disabled 1: Enabled Others: B connector	0	-	Changeable at any time

Para.	Comm. Addr.	Name	Reference	De fault	Unit	Change
FA-34	0xFA22	General PID enable	0: Disabled 1: Enabled Others: B connector	1	-	Changeable at any time
FB-00	0xFB00	Wobble setting mode	0: Relative to center frequency 1: Relative to maximum frequency	0	-	Changeable at any time
FB-01	0xFB01	Wobble amplitude	0.0% to +100.0%	0.0	%	Changeable at any time
FB-02	0xFB02	Wobble step	0.0% to 50.0%	0.0	%	Changeable at any time
FB-03	0xFB03	Wobble cycle	0.1s to 3000.0s	10.0	s	Changeable at any time
FB-04	0xFB04	Triangular wave rise time coefficient	0.1% to +100.0%	50.0	%	Changeable at any time
FB-05	0xFB05	Reference length	0 to 65535	1000	-	Changeable at any time
FB-06	0xFB06	Actual length	0 to 65535	0	-	Unchangea ble
FB-07	0xFB07	Number of pulses per meter	0.1 to 6553.5	100.0	-	Changeable at any time
FB-08	0xFB08	Reference count value	0 to 65535	1000	-	Changeable at any time
FB-09	0xFB09	Designated count value	0 to 65535	1000	-	Changeable at any time
FB-20	0xFB14	Motor-driven potentiometer enable	0: Disabled 1: Enabled 3: DI1 4: DI2 5: DI3 6: DI4 7: DI5 8: DI6 9: DI7 10: DI8 11: DI9 12: DI10 13: DI11 14: DI12 15: DI13 16: DI14 17: DI15 18: DI16 Others: B connector	0	-	Changeable at any time
FB-21	0xFB15	Memory retention at power failure of motor-driven potentiometer	0: Disabled 1: Enabled	0	-	Changeable at any time

Para.	Comm. Addr.	Name	Reference	De fault	Unit	Change
FB-22	0xFB16	Initial value of motor-driven potentiometer	–600% to +600.0%	0.0	%	Changeable at any time
FB-23	0xFB17	Value increase time base of motor-driven potentiometer	0.00s to 655.35s	20.00	s	Changeable at any time
FB-24	0xFB18	Value decrease time base of motor-driven potentiometer	0.00s to 655.35s	20.00	s	Changeable at any time
FB-25	0xFB19	Source of motor-driven potentiometer increase command	0: Invalid 1: Valid 3: DI1 4: DI2 5: DI3 6: DI4 7: DI5 8: DI6 9: DI7 10: DI8 11: DI9 12: DI10 13: DI11 14: DI12 15: DI13 16: DI14 17: DI15 18: DI16 Others: B connector	0	-	Changeable at any time
FB-26	0xFB1A	Source of motor-driven potentiometer decrease command	Same as FB-25	0	-	Changeable at any time
FB-27	0xFB1B	Maximum output value of motor-driven potentiometer	–600% to +600.0%	600.0	%	Changeable at any time
FB-28	0xFB1C	Minimum output value of motor-driven potentiometer	–600% to +600.0%	–600	%	Changeable at any time
FB-29	0xFB1D	Source 1 of motor-driven potentiometer pause command	Same as FB-25	0	-	Changeable at any time

Para.	Comm. Addr.	Name	Reference	De fault	Unit	Change
FB-30	0xFB1E	Source 2 of motor-driven potentiometer pause command	Same as FB-25	0	-	Changeable at any time
FB-31	0xFB1F	Source 1 of motor-driven potentiometer reset command	Same as FB-25	0	-	Changeable at any time
FB-32	0xFB20	Source 2 of motor-driven potentiometer reset command	Same as FB-25	0	-	Changeable at any time
FB-33	0xFB21	Source of motor-driven potentiometer reset value	0: Digital setting 1: AI1 2: AI2 3: AI3 4: Pulse reference 5: Communication 6: Multi-reference 7: Motor-driven potentiometer 8: PID Others: F connector	0	-	Changeable at any time
FB-34	0xFB22	Reset value of motor-driven potentiometer	–600% to +600.0%	0.0	%	Changeable at any time
FB-35	0xFB23	Source of motor-driven potentiometer force command	Same as FB-25	0	-	Changeable at any time
FB-36	0xFB24	Source of motor-driven potentiometer force value	0: Digital setting 1: AI1 2: AI2 3: AI3 4: Pulse reference 5: Communication 6: Multi-reference 7: Motor-driven potentiometer 8: PID Others: F connector	0	-	Changeable at any time
FB-37	0xFB25	Force value of motor-driven potentiometer	–600% to +600.0%	0.0	%	Changeable at any time
FB-38	0xFB26	High-order bits of motor-driven potentiometer storage	0 to 65535	0	-	Changeable at any time

Para.	Comm. Addr.	Name	Reference	De fault	Unit	Change
FB-39	0xFB27	Low-order bits of motor-driven potentiometer storage	0 to 65535	0	-	Changeable at any time
FB-46	0xFB2E	Simple UP/DOWN output	–32767 to +32767	0	-	Unchangea ble
FC-00	0xFC00	Multi-reference 1	–100% to +100.0%	0.0	%	Changeable at any time
FC-01	0xFC01	Multi-reference 2	–100% to +100.0%	0.0	%	Changeable at any time
FC-02	0xFC02	Multi-reference 3	–100% to +100.0%	0.0	%	Changeable at any time
FC-03	0xFC03	Multi-reference 4	–100% to +100.0%	0.0	%	Changeable at any time
FC-04	0xFC04	Multi-reference 5	–100% to +100.0%	0.0	%	Changeable at any time
FC-05	0xFC05	Multi-reference 6	–100% to +100.0%	0.0	%	Changeable at any time
FC-06	0xFC06	Multi-reference 7	–100% to +100.0%	0.0	%	Changeable at any time
FC-07	0xFC07	Multi-reference 8	–100% to +100.0%	0.0	%	Changeable at any time
FC-08	0xFC08	Multi-reference 9	–100% to +100.0%	0.0	%	Changeable at any time
FC-09	0xFC09	Multi-reference 10	–100% to +100.0%	0.0	%	Changeable at any time
FC-10	0xFC0A	Multi-reference 11	–100% to +100.0%	0.0	%	Changeable at any time
FC-11	0xFC0B	Multi-reference 12	–100% to +100.0%	0.0	%	Changeable at any time
FC-12	0xFC0C	Multi-reference 13	–100% to +100.0%	0.0	%	Changeable at any time
FC-13	0xFC0D	Multi-reference 14	–100% to +100.0%	0.0	%	Changeable at any time
FC-14	0xFC0E	Multi-reference 15	–100% to +100.0%	0.0	%	Changeable at any time
FC-15	0xFC0F	Multi-reference 16	–100% to +100.0%	0.0	%	Changeable at any time
FC-16	0xFC10	Simple PLC running mode	0: Stop after running for one cycle 1: Keep final values after running for one cycle 2: Repeat after running for one cycle	0	-	Changeable at any time

Para.	Comm. Addr.	Name	Reference	De fault	Unit	Change
FC-17	0xFC11	Simple PLC memory retention upon power failure	Ones: Retentive upon power failure 0: No 1: Yes Tens: Retentive upon stop 0: No 1: Yes	0	-	Changeable at any time
FC-18	0xFC12	Running time of PLC reference 0	0.0s (h) to 6553.5s (h)	0.0	s (h)	Changeable at any time
FC-19	0xFC13	Acceleration/ Deceleration time of PLC reference 0	0 to 3	0	-	Changeable at any time
FC-20	0xFC14	Running time of PLC reference 1	0.0s (h) to 6553.5s (h)	0.0	s (h)	Changeable at any time
FC-21	0xFC15	Acceleration/ Deceleration time of PLC reference 1	0 to 3	0	-	Changeable at any time
FC-22	0xFC16	Running time of PLC reference 2	0.0s (h) to 6553.5s (h)	0.0	s (h)	Changeable at any time
FC-23	0xFC17	Acceleration/ Deceleration time of PLC reference 2	0 to 3	0	-	Changeable at any time
FC-24	0xFC18	Running time of PLC reference 3	0.0s (h) to 6553.5s (h)	0.0	s (h)	Changeable at any time
FC-25	0xFC19	Acceleration/ Deceleration time of PLC reference 3	0 to 3	0	-	Changeable at any time
FC-26	0xFC1A	Running time of PLC reference 4	0.0s (h) to 6553.5s (h)	0.0	s (h)	Changeable at any time
FC-27	0xFC1B	Acceleration/ Deceleration time of PLC reference 4	0 to 3	0	-	Changeable at any time
FC-28	0xFC1C	Running time of PLC reference 5	0.0s (h) to 6553.5s (h)	0.0	s (h)	Changeable at any time
FC-29	0xFC1D	Acceleration/ Deceleration time of PLC reference 5	0 to 3	0	-	Changeable at any time
FC-30	0xFC1E	Running time of PLC reference 6	0.0s (h) to 6553.5s (h)	0.0	s (h)	Changeable at any time
FC-31	0xFC1F	Acceleration/ Deceleration time of PLC reference 6	0 to 3	0	-	Changeable at any time
FC-32	0xFC20	Running time of PLC reference 7	0.0s (h) to 6553.5s (h)	0.0	s (h)	Changeable at any time
FC-33	0xFC21	Acceleration/ Deceleration time of PLC reference 7	0 to 3	0	-	Changeable at any time

Para.	Comm. Addr.	Name	Reference	De fault	Unit	Change
FC-34	0xFC22	Running time of PLC reference 8	0.0s (h) to 6553.5s (h)	0.0	s (h)	Changeable at any time
FC-35	0xFC23	Acceleration/ Deceleration time of PLC reference 8	0 to 3	0	-	Changeable at any time
FC-36	0xFC24	Running time of PLC reference 9	0.0s (h) to 6553.5s (h)	0.0	s (h)	Changeable at any time
FC-37	0xFC25	Acceleration/ Deceleration time of PLC reference 9	0 to 3	0	-	Changeable at any time
FC-38	0xFC26	Running time of PLC reference 10	0.0s (h) to 6553.5s (h)	0.0	s (h)	Changeable at any time
FC-39	0xFC27	Acceleration/ Deceleration time of PLC reference 10	0 to 3	0	-	Changeable at any time
FC-40	0xFC28	Running time of PLC reference 11	0.0s (h) to 6553.5s (h)	0.0	s (h)	Changeable at any time
FC-41	0xFC29	Acceleration/ Deceleration time of PLC reference 11	0 to 3	0	-	Changeable at any time
FC-42	0xFC2A	Running time of PLC reference 12	0.0s (h) to 6553.5s (h)	0.0	s (h)	Changeable at any time
FC-43	0xFC2B	Acceleration/ Deceleration time of PLC reference 12	0 to 3	0	-	Changeable at any time
FC-44	0xFC2C	Running time of PLC reference 13	0.0s (h) to 6553.5s (h)	0.0	s (h)	Changeable at any time
FC-45	0xFC2D	Acceleration/ Deceleration time of PLC reference 13	0 to 3	0	-	Changeable at any time
FC-46	0xFC2E	Running time of PLC reference 14	0.0s (h) to 6553.5s (h)	0.0	s (h)	Changeable at any time
FC-47	0xFC2F	Acceleration/ Deceleration time of PLC reference 14	0 to 3	0	-	Changeable at any time
FC-48	0xFC30	Running time of PLC reference 15	0.0s (h) to 6553.5s (h)	0.0	s (h)	Changeable at any time
FC-49	0xFC31	Acceleration/ Deceleration time of PLC reference 15	0 to 3	0	-	Changeable at any time
FC-50	0xFC32	PLC running time unit	0: s (second) 1: h (hour)	0	-	Changeable at any time

Para.	Comm. Addr.	Name	Reference	De fault	Unit	Change
FC-51	0xFC33	Multi-reference 0 source	0: FC-00 1: AI1 2: AI2 3: AI3 4: Pulse reference 5: PID 6: Preset frequency (F0-08) Others: F connector	0	-	Changeable at any time
FC-52	0xFC34	Current multi-reference	0: Multi-reference 1 1: Multi-reference 2 2: Multi-reference 3 3: Multi-reference 4 4: Multi-reference 5 5: Multi-reference 6 6: Multi-reference 7 7: Multi-reference 8 8: Multi-reference 9 9: Multi-reference 10 10: Multi-reference 11 11: Multi-reference 12 12: Multi-reference 13 13: Multi-reference 14 14: Multi-reference 15 15: Multi-reference 16	0	-	Unchangea ble
FC-53	0xFC35	Current multi-reference value	–600% to +600.0%	0.0	%	Unchangea ble
FC-55	0xFC37	Multi-reference value bit0	0: 0 1: 1 2: Terminal function input 3: DI1 4: DI2 5: DI3 6: DI4 7: DI5 8: DI6 9: DI7 10: DI8 11: DI9 12: DI10 13: DI11 14: DI12 15: DI13 16: DI14 17: DI15 18: DI16 Others: B connector	0	-	Changeable at any time
FC-56	0xFC38	Multi-reference value bit1	FC-55	0	-	Changeable at any time

Para.	Comm. Addr.	Name	Reference	De fault	Unit	Change
FC-57	0xFC39	Multi-reference value bit2	FC-55	0	-	Changeable at any time
FC-58	0xFC3A	Multi-reference value bit3	FC-55	0	-	Changeable at any time
FC-59	0xFC3B	Current STEP of PLC	0 to 65535	0	-	Unchangea ble
FC-60	0xFC3C	High-order bits of PLC current STEP running time	0 to 65535	0	-	Unchangea ble
FC-61	0xFC3D	Low-order bits of PLC current STEP running time	0 to 65535	0	-	Unchangea ble
FD-00	0xFD00	Baud rate	Ones: Modbus 0: 300 bps 1: 600 bps 2: 1200 bps 3: 2400 bps 4: 4800 bps 5: 9600 bps 6: 19200 bps 7: 38400 bps 8: 57600 bps 9: 115200 bps Tens: Reserved Hundreds: Reserved Thousands: CANLink/CANOpen 0: 20 1: 50 2: 100 3: 125 4: 250 5: 500 6: 1M	5005	-	Changeable only at stop
FD-01	0xFD01	Modbus data format	0: No check (8-N-2) 1: Even parity (8-E-1) 2: Odd parity (8-O-1) 3: No check (8-N-1) 4: No check (7-N-2) 5: Even parity (7-E-1) 6: Odd parity (7-O-1) 7: No check (7-N-1)	0	-	Changeable at any time
FD-02	0xFD02	Local address	1 to 247	1	-	Changeable only at stop
FD-03	0xFD03	Modbus response delay	0 ms to 20 ms	2	ms	Changeable at any time

Para.	Comm. Addr.	Name	Reference	De fault	Unit	Change
FD-04	0xFD04	Communication timeout time	0.0s to 60.0s	0.0	s	Changeable at any time
FD-06	0xFD06	Current resolution read by communication	0: 0.01 A (valid when ≤55 kW) 1: 0.1 A	0	-	Changeable at any time
FD-08	0xFD08	Expansion card communication timeout time	0.0s to 60.0s	0.0	s	Changeable at any time
FD-10	0xFD0A	CANopen/CANlink switchover	1: CANopen 2: CANlink	2	-	Changeable at any time
FD-14	0xFD0E	Number of frames received per unit time	0 to 65535	0	-	Unchangea ble
FD-15	0xFD0F	Maximum RX error count	0 to 65535	0	-	Unchangea ble
FD-16	0xFD10	Maximum TX error count	0 to 65535	0	-	Unchangea ble
FD-17	0xFD11	Bus-off count per unit time	0 to 65535	0	-	Unchangea ble
FD-19	0xFD13	CAN communication disconnection coefficient	1 to 15	3	-	Changeable only at stop
FD-20	0xFD14	PROFIBUS DP communication address	0 to 125	0	-	Changeable only at stop
FD-21	0xFD15	PROFIBUS DP communication disconnection coefficient	0 to 65535	350	-	Changeable only at stop
FD-27	0xFD1B	Storage of parameters written through communication	0 to 1	0	-	Changeable at any time
FD-28	0xFD1C	Auto reset upon communication fault	0 to 1	1	-	Changeable at any time
FD-29	0xFD1D	Communication state	0 to 999	0	-	Unchangea ble
FD-30	0xFD1E	Number of RPDO mapped bytes	0 to 65535	0	-	Changeable at any time
FD-31	0xFD1F	Number of TPDO mapped bytes	0 to 65535	0	-	Changeable at any time
FD-32	0xFD20	Group AF mapping mode switchover	0: Parameters written through communication are not saved 1: Parameters written through communication are saved	0	-	Changeable only at stop

Para.	Comm. Addr.	Name	Reference	De fault	Unit	Change
FD-37	0xFD25	DHCP function	0: Disabled 1: Enabled	0	-	Changeable only at stop
FD-38	0xFD26	MSB of IP address	0 to 255	0	-	Changeable only at stop
FD-39	0xFD27	Second MSB of IP address	0 to 255	0	-	Changeable only at stop
FD-40	0xFD28	Third byte of IP address	0 to 255	0	-	Changeable only at stop
FD-41	0xFD29	LSB of IP address	0 to 255	0	-	Changeable only at stop
FD-42	0xFD2A	MSB of subnet mask	0 to 255	0	-	Changeable only at stop
FD-43	0xFD2B	Second MSB of subnet mask	0 to 255	0	-	Changeable only at stop
FD-44	0xFD2C	Third byte of subnet mask	0 to 255	0	-	Changeable only at stop
FD-45	0xFD2D	LSB of subnet mask	0 to 255	0	-	Changeable only at stop
FD-46	0xFD2E	MSB of gateway	0 to 255	0	-	Changeable only at stop
FD-47	0xFD2F	Second MSB of gateway	0 to 255	0	-	Changeable only at stop
FD-48	0xFD30	Third byte of gateway	0 to 255	0	-	Changeable only at stop
FD-49	0xFD31	LSB of gateway	0 to 255	0	-	Changeable only at stop
FD-58	0xFD3A	Ethernet/IP expansion card error code	0 to 255	0	-	Unchangea ble
FD-61	0xFD3D	High-order byte of MAC address	0x0 to 0xFFFF	0x0	-	Changeable only at stop
FD-62	0xFD3E	Middle byte of MAC address	0x0 to 0xFFFF	0x0	-	Changeable only at stop
FD-63	0xFD3F	Low-order byte of MAC address	0x0 to 0xFFFF	0x0	-	Changeable only at stop
FD-92	0xFD5C	Slave alias backup	0 to 65535	0	-	Changeable at any time
FD-93	0xFD5D	Null pointer	0 to 65535	0	-	Changeable at any time
FD-94	0xFD5E	Communication software version	0.00 to 655.35	0.00	-	Unchangea ble
FE-00	0x2F00	User-defined parameter 0	0 to 65535	0	-	Changeable at any time

Para.	Comm. Addr.	Name	Reference	De fault	Unit	Change
FE-01	0x2F01	User-defined parameter 1	0 to 65535	0	-	Changeable at any time
FE-02	0x2F02	User-defined parameter 2	0 to 65535	0	-	Changeable at any time
FE-03	0x2F03	User-defined parameter 3	0 to 65535	0	-	Changeable at any time
FE-04	0x2F04	User-defined parameter 4	0 to 65535	0	-	Changeable at any time
FE-05	0x2F05	User-defined parameter 5	0 to 65535	0	-	Changeable at any time
FE-06	0x2F06	User-defined parameter 6	0 to 65535	0	-	Changeable at any time
FE-07	0x2F07	User-defined parameter 7	0 to 65535	0	-	Changeable at any time
FE-08	0x2F08	User-defined parameter 8	0 to 65535	0	-	Changeable at any time
FE-09	0x2F09	User-defined parameter 9	0 to 65535	0	-	Changeable at any time
FE-10	0x2F0A	User-defined parameter 10	0 to 65535	0	-	Changeable at any time
FE-11	0x2F0B	User-defined parameter 11	0 to 65535	0	-	Changeable at any time
FE-12	0x2F0C	User-defined parameter 12	0 to 65535	0	-	Changeable at any time
FE-13	0x2F0D	User-defined parameter 13	0 to 65535	0	-	Changeable at any time
FE-14	0x2F0E	User-defined parameter 14	0 to 65535	0	-	Changeable at any time
FE-15	0x2F0F	User-defined parameter 15	0 to 65535	0	-	Changeable at any time
FE-16	0x2F10	User-defined parameter 16	0 to 65535	0	-	Changeable at any time
FE-17	0x2F11	User-defined parameter 17	0 to 65535	0	-	Changeable at any time
FE-18	0x2F12	User-defined parameter 18	0 to 65535	0	-	Changeable at any time
FE-19	0x2F13	User-defined parameter 19	0 to 65535	0	-	Changeable at any time
FE-20	0x2F14	User-defined parameter 20	0 to 65535	0	-	Changeable at any time
FE-21	0x2F15	User-defined parameter 21	0 to 65535	0	-	Changeable at any time
FE-22	0x2F16	User-defined parameter 22	0 to 65535	0	-	Changeable at any time

Para.	Comm. Addr.	Name	Reference	De fault	Unit	Change
FE-23	0x2F17	User-defined parameter 23	0 to 65535	0	-	Changeable at any time
FE-24	0x2F18	User-defined parameter 24	0 to 65535	0	-	Changeable at any time
FE-25	0x2F19	User-defined parameter 25	0 to 65535	0	-	Changeable at any time
FE-26	0x2F1A	User-defined parameter 26	0 to 65535	0	-	Changeable at any time
FE-27	0x2F1B	User-defined parameter 27	0 to 65535	0	-	Changeable at any time
FE-28	0x2F1C	User-defined parameter 28	0 to 65535	0	-	Changeable at any time
FE-29	0x2F1D	User-defined parameter 29	0 to 65535	0	-	Changeable at any time
FE-30	0x2F1E	User-defined parameter 30	0 to 65535	0	-	Changeable at any time
FE-31	0x2F1F	User-defined parameter 31	0 to 65535	0	-	Changeable at any time
FP-00	0x1F00	User password	0 to 65535	0	-	Changeable at any time
FP-01	0x1F01	Parameter initialization	0: No operation 1: Restore default settings (excluding motor parameters) 2: Clear records 4: Back up current user parameters 501: Restore user parameters from backup 503: Restore default settings (including motor parameters)	0	-	Changeable only at stop
FP-02	0x1F02	Parameter display	Bit00: Group U 0: Hidden 1: Displayed Bit01: Group A 0: Hidden 1: Displayed Bit02: Group B 0: Hidden 1: Displayed Bit03: Group C 0: Hidden 1: Displayed Bit04: Group H 0: Hidden 1: Displayed Bit05: Group L 0: Hidden 1: Displayed	63	-	Changeable at any time

Para.	Comm. Addr.	Name	Reference	De fault	Unit	Change
FP-03	0x1F03	Display of individualized parameters	Ones: User mode 0: Hidden 1: Displayed Tens: Correction mode 0: Hidden 1: Displayed Hundreds: Error menu 0: Hidden 1: Displayed	111	-	Changeable at any time
FP-04	0x1F04	Parameter modification	0: Modification allowed 1: Modification prohibited	0	-	Changeable at any time
FP-06	0x1F06	Monitoring password	0 to 65535	0	-	Changeable at any time
FP-07	0x1F07	Expert password	0 to 65535	0	-	Changeable at any time
FP-08	0x1F08	Factory password	0 to 65535	0	-	Changeable at any time
FP-09	0x1F09	Password input window	0 to 65535	0	-	Changeable at any time
FP-14	0x1F0E	Parameter clearing	0: No operation 1: Clear all record (faults and time) parameters 2: Clear fault information 500: Clear all backup user parameters 1000: Clear all backup motor parameters	0	-	Changeable only at stop
FP-15	0x1F0F	Parameter restoration	0: No operation 500: Restore user backup 501: Restore user macro backup 1 502: Restore user macro backup 2 503: Restore user macro backup 3 504: Restore user macro backup 4 505: Restore user macro backup 5 506: Restore user macro backup 6 2011: Restore motor macro backup parameter 1 to motor 1 2012: Restore motor macro backup parameter 1 to motor 2 (To be continued)	0	-	Changeable only at stop

Para.	Comm. Addr.	Name	Reference	Default	Unit	Change
(Continued)	(Continued)	(Continued)	(Continued) 2013: Restore motor macro backup parameter 1 to motor 3 2014: Restore motor macro backup parameter 1 to motor 4 2021: Restore motor macro backup parameter 2 to motor 1 2022: Restore motor macro backup parameter 2 to motor 2 2023: Restore motor macro backup parameter 2 to motor 3 2024: Restore motor macro backup parameter 2 to motor 4 2031: Restore motor macro backup parameter 3 to motor 1 2032: Restore motor macro backup parameter 3 to motor 2 2033: Restore motor macro backup parameter 3 to motor 3 2034: Restore motor macro backup parameter 3 to motor 4 (To be continued)	0	-	Changeable only at stop
(Continued)	(Continued)	(Continued)	(Continued) 2041: Restore motor macro backup parameter 4 to motor 1 2042: Restore motor macro backup parameter 4 to motor 2 2043: Restore motor macro backup parameter 4 to motor 3 2044: Restore motor macro backup parameter 4 to motor 4 2051: Restore motor macro backup parameter 5 to motor 1 2052: Restore motor macro backup parameter 5 to motor 2 2053: Restore motor macro backup parameter 5 to motor 3 2054: Restore motor macro backup parameter 5 to motor 4 2061: Restore motor macro backup parameter 6 to motor 1 2062: Restore motor macro backup parameter 6 to motor 2 2063: Restore motor macro backup parameter 6 to motor 3 (To be continued)	(Continued)	(Continued)	(Continued)

Para.	Comm. Addr.	Name	Reference	Default	Unit	Change
(Continued)	(Continued)	(Continued)	(Continued) 2064: Restore motor macro backup parameter 6 to motor 4 2071: Restore motor macro backup parameter 7 to motor 1 2072: Restore motor macro backup parameter 7 to motor 2 2073: Restore motor macro backup parameter 7 to motor 3 2074: Restore motor macro backup parameter 7 to motor 4 2081: Restore motor macro backup parameter 8 to motor 1 2082: Restore motor macro backup parameter 8 to motor 2 2083: Restore motor macro backup parameter 8 to motor 3 2084: Restore motor macro backup parameter 8 to motor 4 2091: Restore motor macro backup parameter 9 to motor 1 (To be continued)	(Continued)	(Continued)	(Continued)
(Continued)	(Continued)	(Continued)	(Continued) 2092: Restore motor macro backup parameter 9 to motor 2 2093: Restore motor macro backup parameter 9 to motor 3 2094: Restore motor macro backup parameter 9 to motor 4 2101: Restore motor macro backup parameter 10 to motor 1 2102: Restore motor macro backup parameter 10 to motor 2 2103: Restore motor macro backup parameter 10 to motor 3 2104: Restore motor macro backup parameter 10 to motor 4 2111: Restore motor macro backup parameter 11 to motor 1 (To be continued)	(Continued)	(Continued)	(Continued)

Para.	Comm. Addr.	Name	Reference	Default	Unit	Change
(Continued)	(Continued)	(Continued)	(Continued) 2112: Restore motor macro backup parameter 11 to motor 2 2113: Restore motor macro backup parameter 11 to motor 3 2114: Restore motor macro backup parameter 11 to motor 4 2121: Restore motor macro backup parameter 12 to motor 1 2122: Restore motor macro backup parameter 12 to motor 2 2123: Restore motor macro backup parameter 12 to motor 3 2124: Restore motor macro backup parameter 12 to motor 4 2131: Restore motor macro backup parameter 13 to motor 1 2132: Restore motor macro backup parameter 13 to motor 2 (To be continued)	0	-	Changeable only at stop
(Continued)	(Continued)	(Continued)	(Continued) 2133: Restore motor macro backup parameter 13 to motor 3 2134: Restore motor macro backup parameter 13 to motor 4 2141: Restore motor macro backup parameter 14 to motor 1 2142: Restore motor macro backup parameter 14 to motor 2 2143: Restore motor macro backup parameter 14 to motor 3 2144: Restore motor macro backup parameter 14 to motor 4 2151: Restore motor macro backup parameter 15 to motor 1 2152: Restore motor macro backup parameter 15 to motor 2 2153: Restore motor macro backup parameter 15 to motor 3 2154: Restore motor macro backup parameter 15 to motor 4 2161: Restore motor macro backup parameter 16 to motor 1 2162: Restore motor macro backup parameter 16 to motor 2 2163: Restore motor macro backup parameter 16 to motor 3 (To be continued)	(Continued)	(Continued)	(Continued)

Para.	Comm. Addr.	Name	Reference	Default	Unit	Change
(Continued)	(Continued)	(Continued)	(Continued) 2164: Restore motor macro backup parameter 16 to motor 4 2171: Restore motor macro backup parameter 17 to motor 1 2172: Restore motor macro backup parameter 17 to motor 2 2173: Restore motor macro backup parameter 17 to motor 3 2174: Restore motor macro backup parameter 17 to motor 4 2181: Restore motor macro backup parameter 18 to motor 1 2182: Restore motor macro backup parameter 18 to motor 2 2183: Restore motor macro backup parameter 18 to motor 3 (To be continued)	(Continued)	(Continued)	(Continued)
(Continued)	(Continued)	(Continued)	(Continued) 2184: Restore motor macro backup parameter 18 to motor 4 2191: Restore motor macro backup parameter 19 to motor 1 2192: Restore motor macro backup parameter 19 to motor 2 2193: Restore motor macro backup parameter 19 to motor 3 2194: Restore motor macro backup parameter 19 to motor 4 2201: Restore motor macro backup parameter 20 to motor 1 2202: Restore motor macro backup parameter 20 to motor 2 2203: Restore motor macro backup parameter 20 to motor 3 2204: Restore motor macro backup parameter 20 to motor 4	(Continued)	(Continued)	(Continued)

Para.	Comm. Addr.	Name	Reference	De fault	Unit	Change
FP-16	0x1F10	User backup	0: No operation 400: Back up user parameters 401: Back up user macro parameters to address 1 402: Back up user macro parameters to 2 403: Back up user macro parameters to 3 404: Back up user macro parameters to 4 405: Back up user macro parameters to 5 406: Back up user macro parameters to 6 1011: Back up parameters of motor 1 to address 1 1012: Back up parameters of motor 2 to address 1 1013: Back up parameters of motor 3 to address 1 1014: Back up parameters of motor 4 to address 1 1021: Back up parameters of motor 1 to address 2 1022: Back up parameters of motor 2 to address 2 1023: Back up parameters of motor 3 to address 2 1024: Back up parameters of motor 4 to address 2 1031: Back up parameters of motor 1 to address 3 (To be continued)	0	-	Changeable only at stop

Para.	Comm. Addr.	Name	Reference	Default	Unit	Change
(Continued)	(Continued)	(Continued)	(Continued) 1032: Back up parameters of motor 2 to address 3 1033: Back up parameters of motor 3 to address 3 1034: Back up parameters of motor 4 to address 3 1041: Back up parameters of motor 1 to address 4 1042: Back up parameters of motor 2 to address 4 1043: Back up parameters of motor 3 to address 4 1044: Back up parameters of motor 4 to address 4 1051: Back up parameters of motor 1 to address 5 1052: Back up parameters of motor 2 to address 5 1053: Back up parameters of motor 3 to address 5 1054: Back up parameters of motor 4 to address 5 1061: Back up parameters of motor 1 to address 6 1062: Back up parameters of motor 2 to address 6 1063: Back up parameters of motor 3 to address 6 1064: Back up parameters of motor 4 to address 6 (To be continued)	(Continued)	(Continued)	(Continued)

Para.	Comm. Addr.	Name	Reference	Default	Unit	Change
(Continued)	(Continued)	(Continued)	(Continued) 1071: Back up parameters of motor 1 to address 7 1072: Back up parameters of motor 2 to address 7 1073: Back up parameters of motor 3 to address 7 1074: Back up parameters of motor 4 to address 7 1081: Back up parameters of motor 1 to address 8 1082: Back up parameters of motor 2 to address 8 1083: Back up parameters of motor 3 to address 8 1084: Back up parameters of motor 4 to address 8 1091: Back up parameters of motor 1 to address 9 1092: Back up parameters of motor 2 to address 9 1093: Back up parameters of motor 3 to address 9 1094: Back up parameters of motor 4 to address 9 1101: Back up parameters of motor 1 to address 10 (To be continued)	(Continued)	(Continued)	(Continued)

Para.	Comm. Addr.	Name	Reference	Default	Unit	Change
(Continued)	(Continued)	(Continued)	(Continued) 1102: Back up parameters of motor 2 to address 10 1103: Back up parameters of motor 3 to address 10 1104: Back up parameters of motor 4 to address 10 1111: Back up parameters of motor 1 to address 11 1112: Back up parameters of motor 2 to address 11 1113: Back up parameters of motor 3 to address 11 1114: Back up parameters of motor 4 to address 11 1121: Back up parameters of motor 1 to address 12 1122: Back up parameters of motor 2 to address 12 1123: Back up parameters of motor 3 to address 12 1124: Back up parameters of motor 4 to address 12 1131: Back up parameters of motor 1 to address 13 1132: Back up parameters of motor 2 to address 13 1133: Back up parameters of motor 3 to address 13 1134: Back up parameters of motor 4 to address 13 1141: Back up parameters of motor 1 to address 14 1142: Back up parameters of motor 2 to address 14 1143: Back up parameters of motor 3 to address 14 1144: Back up parameters of motor 4 to address 14 (To be continued)	(Continued)	(Continued)	(Continued)

Para.	Comm. Addr.	Name	Reference	Default	Unit	Change
(Continued)	(Continued)	(Continued)	(Continued) 1151: Back up parameters of motor 1 to address 15 1152: Back up parameters of motor 2 to address 15 1153: Back up parameters of motor 3 to address 15 1154: Back up parameters of motor 4 to address 15 1161: Back up parameters of motor 1 to address 16 1162: Back up parameters of motor 2 to address 16 1163: Back up parameters of motor 3 to address 16 1164: Back up parameters of motor 4 to address 16 1171: Back up parameters of motor 1 to address 17 1172: Back up parameters of motor 2 to address 17 (To be continued)	(Continued)	(Continued)	(Continued)

Para.	Comm. Addr.	Name	Reference	Default	Unit	Change
(Continued)	(Continued)	(Continued)	(Continued) 1173: Back up parameters of motor 3 to address 17 1174: Back up parameters of motor 4 to address 17 1181: Back up parameters of motor 1 to address 18 1182: Back up parameters of motor 2 to address 18 1183: Back up parameters of motor 3 to address 18 1184: Back up parameters of motor 4 to address 18 1191: Back up parameters of motor 1 to address 19 1192: Back up parameters of motor 2 to address 19 1193: Back up parameters of motor 3 to address 19 1194: Back up parameters of motor 4 to address 19 1201: Back up parameters of motor 1 to address 20 1202: Back up parameters of motor 2 to address 20 1203: Back up parameters of motor 3 to address 20 1204: Back up parameters of motor 4 to address 20 (To be continued)	(Continued)	(Continued)	(Continued)
A0-00	0xA000	Speed/Torque control mode	0: Speed control 1: Torque control	0	-	Changeable at any time
A0-01	0xA001	Torque reference source in torque control mode (torque upper limit source)	0: A0-03 1: AI1 2: AI2 3: AI3 4: Pulse 5: Communication 6: MIN (AI1, AI2) 7: MAX (AI1, AI2) Others: F connector	0	-	Changeable only at stop
A0-03	0xA003	Torque reference in torque control mode	–200% to +200.0%	150.0	%	Changeable at any time
A0-04	0xA004	Torque reference filter time (upper limit)	0 ms to 10000 ms	0	ms	Changeable at any time

Para.	Comm. Addr.	Name	Reference	De fault	Unit	Change
A0-05	0xA005	Maximum forward frequency in torque control	0.00 Hz to F0-10	0.00	Hz	Changeable at any time
A0-06	0xA006	Maximum reverse frequency in torque control	0.00 Hz to F0-10	0.00	Hz	Changeable at any time
A0-07	0xA007	Torque rising filter time	0.00s to 650.00s	0.00	s	Changeable at any time
A0-08	0xA008	Torque falling filter time	0.00s to 650.00s	0.00	s	Changeable at any time
A0-10	0xA00A	Torque mode	0: MD500 torque mode 1: Vanguard torque mode	0	-	Changeable only at stop
A0-11	0xA00B	Torque acceleration time gain	0: 100% 1: AI1 2: AI2 3: AI3 4: Pulse reference 5: Communication 6: Multi-reference 7: Motor-driven potentiometer 8: PID Others: F connector	0	-	Changeable at any time
A0-12	0xA00C	Torque deceleration time gain	Same as A0-11	0	-	Changeable at any time
A0-13	0xA00D	Torque reference source	0: Digital setting 1: AI1 2: AI2 3: AI3 4: Pulse reference 5: Communication 6: Multi-reference 7: Motor-driven potentiometer 8: PID Others: F connector	0	-	Changeable at any time
A0-14	0xA00E	Torque reference	–400% to +400.0%	0.0	%	Changeable at any time
A0-15	0xA00F	Speed limit source in torque control mode	0: Digital setting 1: Speed reference channel	0	-	Changeable at any time
A0-16	0xA010	Speed limit in torque control mode	–100% to +100.0%	0.0	%	Changeable at any time
A0-17	0xA011	Speed limit offset mode	0: Bidirectional offset 1: Unidirectional offset 2: Compatible solution	0	-	Changeable at any time

Para.	Comm. Addr.	Name	Reference	De fault	Unit	Change
A0-18	0xA012	Speed limit offset source	Same as A0-13	0	-	Changeable at any time
A0-19	0xA013	Speed limit offset	0.0% to 300.0%	5.0	%	Changeable at any time
A0-20	0xA014	Source of supplementary torque reference 1	Same as A0-13	0	-	Changeable at any time
A0-21	0xA015	Supplementary torque reference 1	–400% to +400.0%	0.0	%	Changeable at any time
A0-22	0xA016	Source of supplementary torque reference 2	Same as A0-13	0	-	Changeable at any time
A0-23	0xA017	Supplementary torque reference 2 input enable	0: Disabled 1: Enabled 3: DI1 4: DI2 5: DI3 6: DI4 7: DI5 8: DI6 9: DI7 10: DI8 11: DI9 12: DI10 13: DI11 14: DI12 15: DI13 16: DI14 17: DI15 18: DI16 Others: B connector	1	-	Changeable at any time
A0-24	0xA018	Torque filter time	0 ms to 10000 ms	0	ms	Changeable at any time
A0-25	0xA019	Torque acceleration time	0.000s to 60.000s	0.000	s	Changeable at any time
A0-26	0xA01A	Torque deceleration time	0.000s to 60.000s	0.000	s	Changeable at any time
A0-27	0xA01B	Torque reference gain	0: 100% 1: AI1 2: AI2 3: AI3 4: Pulse reference 5: Communication 6: Multi-reference 7: Motor-driven potentiometer 8: PID Others: F connector	0	-	Changeable at any time

Para.	Comm. Addr.	Name	Reference	De fault	Unit	Change
A1-00	0xA100	VDI1 function	Same as F4-04	0	-	Changeable only at stop
A1-01	0xA101	VDI2 function	Same as F4-04	0	-	Changeable only at stop
A1-02	0xA102	VDI3 function	Same as F4-04	0	-	Changeable only at stop
A1-03	0xA103	VDI4 function	Same as F4-04	0	-	Changeable only at stop
A1-04	0xA104	VDI5 function	Same as F4-04	0	-	Changeable only at stop
A1-05	0xA105	VDI active state source	Tens: VDI1 active state source 0: VDO1 1: A1-06 2: DI1 3: Communication setpoint (bit10 of F4-50) 4: AI1 5: Reserved Tens: VDI2 active state source 0: VDO2 1: A1-06 2: DI2 3: Communication setpoint (bit11 of F4-50) 4: AI2 5: Reserved To be continued	0	-	Changeable only at stop
Continued	Continued	Continued	Continued Hundreds: VDI3 active state source 0: VDO3 1: A1-06 2: DI3 3: Communication setpoint (bit12 of F4-50) 4: AI3 5: Reserved Thousands: VDI4 active state source 0: VDO4 1: A1-06 2: DI4 3: Communication setpoint (bit13 of F4-50) 4–5: Reserved Ten thousands: VDI5 active state source 0: VDO5 1: A1-06 2: DI5 3: Communication setpoint (bit14 of F4-50) 4–5: Reserved	Continued	Continued	Continued

Para.	Comm. Addr.	Name	Reference	De fault	Unit	Change
A1-06	0xA106	VDI state	Ones: VDI1 0: Inactive 1: Active Tens: VDI2 0: Inactive 1: Active Hundreds: VDI3 0: Inactive 1: Active Thousands: VDI4 0: Inactive 1: Active Ten thousands: VDI5 0: Inactive 1: Active	0	-	Changeable at any time
A1-07	0xA107	AI1 (used as DI) function	Same as A1-00	0	-	Changeable only at stop
A1-08	0xA108	AI2 (used as DI) function	Same as A1-00	0	-	Changeable only at stop
A1-09	0xA109	AI3 (used as DI) function	Same as A1-00	0	-	Changeable only at stop
A1-10	0xA10A	AI (used as DI) active mode	Ones: AI1 0: Active low 1: Active high Tens: AI2 0: Active low 1: Active high Hundreds: AI3 0: Active low 1: Active high	0	-	Changeable only at stop
A1-11	0xA10B	VDO1 function	Same as F5-01	0	-	Changeable at any time
A1-12	0xA10C	VDO2 function	Same as F5-01	0	-	Changeable at any time
A1-13	0xA10D	VDO3 function	Same as F5-01	0	-	Changeable at any time
A1-14	0xA10E	VDO4 function	Same as F5-01	0	-	Changeable at any time
A1-15	0xA10F	VDO5 function	Same as F5-01	0	-	Changeable at any time
A1-16	0xA110	VDO1 output delay (invalid)	0.0s to 3600.0s	0.0	s	Changeable at any time
A1-17	0xA111	VDO2 output delay (invalid)	0.0s to 3600.0s	0.0	s	Changeable at any time
A1-18	0xA112	VDO3 output delay (invalid)	0.0s to 3600.0s	0.0	s	Changeable at any time

Para.	Comm. Addr.	Name	Reference	De fault	Unit	Change
A1-19	0xA113	VDO4 output delay (invalid)	0.0s to 3600.0s	0.0	s	Changeable at any time
A1-20	0xA114	VDO5 output delay (invalid)	0.0s to 3600.0s	0.0	s	Changeable at any time
A1-21	0xA115	VDO active mode	Ones: VDO1 0: Positive logic active 1: Negative logic active Tens: VDO2 0: Positive logic active 1: Negative logic active Hundreds: VDO3 0: Positive logic active 1: Negative logic active Thousands: VDO4 0: Positive logic active 1: Negative logic active Ten thousands: VDO5 0: Positive logic active 1: Negative logic active	0	-	Changeable at any time
A1-22	0xA116	VDO1 output switch-on delay	0.0s to 3600.0s	0.0	s	Changeable at any time
A1-23	0xA117	VDO2 output switch-on delay	0.0s to 3600.0s	0.0	s	Changeable at any time
A1-24	0xA118	VDO3 output switch-on delay	0.0s to 3600.0s	0.0	s	Changeable at any time
A1-25	0xA119	VDO4 output switch-on delay	0.0s to 3600.0s	0.0	s	Changeable at any time
A1-26	0xA11A	VDO5 output switch-on delay	0.0s to 3600.0s	0.0	s	Changeable at any time
A1-27	0xA11B	VDO1 output switch-off delay	0.0s to 3600.0s	0.0	s	Changeable at any time
A1-28	0xA11C	VDO2 output switch-off delay	0.0s to 3600.0s	0.0	s	Changeable at any time
A1-29	0xA11D	VDO3 output switch-off delay	0.0s to 3600.0s	0.0	s	Changeable at any time
A1-30	0xA11E	VDO4 output switch-off delay	0.0s to 3600.0s	0.0	s	Changeable at any time
A1-31	0xA11F	VDO5 output switch-off delay	0.0s to 3600.0s	0.0	s	Changeable at any time
A1-32	0xA120	VDO6 function	Same as F5-01	0	-	Changeable at any time
A1-33	0xA121	VDO7 function	Same as F5-01	0	-	Changeable at any time
A1-34	0xA122	VDO8 function	Same as F5-01	0	-	Changeable at any time

Para.	Comm. Addr.	Name	Reference	De fault	Unit	Change
A1-35	0xA123	VDO9 function	Same as F5-01	0	-	Changeable at any time
A1-36	0xA124	VDO10 function	Same as F5-01	0	-	Changeable at any time
A1-37	0xA125	VDO11 function	Same as F5-01	0	-	Changeable at any time
A1-38	0xA126	VDO6–VDO10 active mode	Ones: VDO6 0: Positive logic active 1: Negative logic active Tens: VDO7 0: Positive logic active 1: Negative logic active Hundreds: VDO8 0: Positive logic active 1: Negative logic active Thousands: VDO9 0: Positive logic active 1: Negative logic active Ten thousands: VDO10 0: Positive logic active 1: Negative logic active	0	-	Changeable at any time
A1-39	0xA127	VDO11 active mode	0: Positive logic active 1: Negative logic active	0	-	Changeable at any time
A1-40	0xA128	VDI6 function	Same as A1-00	0	-	Changeable only at stop
A1-41	0xA129	VDI6 hardware source	Ones: VDI6 0: VDO6 1: A1-42 2: DI6 3: Communication setpoint (bit15 of F4-50) 4: Reserved 5: Reserved	0	-	Changeable only at stop
A1-42	0xA12A	VDI6 state	Ones: VDI6 0: Inactive 1: Active	0	-	Changeable at any time

Para.	Comm. Addr.	Name	Reference	De fault	Unit	Change
A1-43	0xA12B	VDI1–VDI5 active mode	Ones: VDI1 0: Active low 1: Active high Tens: VDI2 0: Active low 1: Active high Hundreds: VDI3 0: Active low 1: Active high Thousands: VDI4 0: Active low 1: Active high Ten thousands: VDI5 0: Active low 1: Active high	0	-	Changeable only at stop
A1-44	0xA12C	VDI6 active mode	Ones: VDI6 0: Active low 1: Active high	0	-	Changeable only at stop
A1-50	0xA132	DIO edge count reset	0: Not reset 1: Counting module 1 2: Counting module 2 3: Counting module 3 4: Counting module 4 5: All counting modules	0	-	Changeable at any time
A1-51	0xA133	DIO edge counting channel selection 1	0: None 1: DI1 2: DI2 3: DI3 4: DI4 5: DI5 6: DI6 7: DI7 8: DI8 9: DI9 10: DI10 11: VDI1 12: VDI2 13: VDI3 14: VDI4 To be continued	0	-	Changeable at any time

Para.	Comm. Addr.	Name	Reference	Default	Unit	Change
Continued	Continued	Continued	Continued 15: VDI5 16: VDI6 17: Relay 1 (DO3) 18: FMR 19: DO1 20: Relay 2 (DO4) 21: DO2 22: VDO1 23: VDO2 24: VDO3 25: VDO4 26: VDO5 27: VDO6 28: VDO7 29: VDO8 30: VDO9 31: VDO10 32: VDO11	Continued	Continued	Continued
A1-52	0xA134	DIO edge counting channel selection 2	Same as A1-51	0	-	Changeable at any time
A1-53	0xA135	DIO edge counting channel selection 3	Same as A1-51	0	-	Changeable at any time
A1-54	0xA136	DIO edge counting channel selection 4	Same as A1-51	0	-	Changeable at any time
A1-55	0xA137	DIO edge counting comparison value 1	0 to 65535	0	-	Changeable at any time
A1-56	0xA138	DIO edge counting comparison value 2	0 to 65535	0	-	Changeable at any time
A1-57	0xA139	DIO edge counting comparison value 3	0 to 65535	0	-	Changeable at any time
A1-58	0xA13A	DIO edge counting comparison value 4	0 to 65535	0	-	Changeable at any time
A1-59	0xA13B	DIO edge counting module count value 1	0 to 65535	0	-	Unchangeable
A1-60	0xA13C	DIO edge counting module count value 2	0 to 65535	0	-	Unchangeable
A1-61	0xA13D	DIO edge counting module count value 3	0 to 65535	0	-	Unchangeable
A1-62	0xA13E	DIO edge counting module count value 4	0 to 65535	0	-	Unchangeable

Para.	Comm. Addr.	Name	Reference	De fault	Unit	Change
A2-00	0xA200	Motor type	0: Common asynchronous motor 1: Variable frequency asynchronous motor 2: Permanent magnet synchronous motor	0	-	Changeable only at stop
A2-01	0xA201	Rated motor power	0.1 kW to 1000.0 kW	3.7	kW	Changeable only at stop
A2-02	0xA202	Rated motor voltage	1 V to 2000 V	380	V	Changeable only at stop
A2-03	0xA203	Rated motor current	0.01 A to 655.35 A	9.00	A	Changeable only at stop
A2-04	0xA204	Rated motor frequency	0.01 Hz to F0-10	50.00	Hz	Changeable only at stop
A2-05	0xA205	Rated motor speed	1 RPM to 65535 RPM	1460	RPM	Changeable only at stop
A2-06	0xA206	Asynchronous motor stator resistance	0.001 Ω to 65.535 Ω	1.204	Ω	Changeable only at stop
A2-07	0xA207	Asynchronous motor rotor resistance	0.001 Ω to 65.535 Ω	0.908	Ω	Changeable only at stop
A2-08	0xA208	Asynchronous motor leakage inductance	0.01 mH to 655.35 mH	5.28	mH	Changeable only at stop
A2-09	0xA209	Asynchronous motor mutual inductance	0.1 mH to 6553.5 mH	156.8	mH	Changeable only at stop
A2-10	0xA20A	Asynchronous motor no-load current	0.01 A to A2-03	4.20	A	Changeable only at stop
A2-16	0xA210	Synchronous motor stator resistance	0.001 Ω to 65.535 Ω	1.204	Ω	Changeable only at stop
A2-17	0xA211	Synchronous motor D axis inductance	0.01 mH to 655.35 mH	5.28	mH	Changeable only at stop
A2-18	0xA212	Synchronous motor Q axis inductance	0.01 mH to 655.35 mH	5.28	mH	Changeable only at stop
A2-20	0xA214	Synchronous motor back EMF coefficient	0.0 V to 6553.5 V	300.0	V	Changeable only at stop
A2-27	0xA21B	Encoder PPR	1 to 65535	1024	-	Changeable only at stop
A2-28	0xA21C	Encoder type	0: ABZ incremental encoder 1: 23-bit encoder 2: Resolver 3: External input	0	-	Changeable only at stop
A2-29	0xA21D	Speed feedback PG card	0: Local PG card 1: Extension PG card	0	-	Changeable only at stop

Para.	Comm. Addr.	Name	Reference	De fault	Unit	Change
A2-30	0xA21E	A/B phase sequence of encoder	0: Forward 1: Reverse	0	-	Changeable only at stop
A2-31	0xA21F	Encoder installation angle	0.0° to 359.9°	0.0	°	Changeable only at stop
A2-34	0xA222	Number of resolver pole pairs	1 to 65535	1	-	Changeable only at stop
A2-36	0xA224	Speed feedback PG wire breakage detection time	0.0s to 10.0s	0.0	s	Changeable only at stop
A2-37	0xA225	Auto-tuning	0: No operation 1: Static auto-tuning on partial parameters of asynchronous motor 2: Dynamic auto-tuning on asynchronous motor 3: Static auto-tuning on all parameters of asynchronous motor 4: Inertia auto-tuning 5: Deadzone auto-tuning 11: With-load auto-tuning on synchronous motor (excluding back EMF) 12: No-load dynamic auto-tuning on synchronous motor 13: Static auto-tuning on all parameters of synchronous motor (excluding zero point angle)	0	-	Changeable only at stop
A2-38	0xA226	Speed loop proportional gain 1	1 to 100	30	-	Changeable at any time
A2-39	0xA227	Speed loop integral time 1	0.01s to 10.00s	0.50	s	Changeable at any time
A2-40	0xA228	Switchover frequency 1	0.00 Hz to A2-43	5.00	Hz	Changeable at any time
A2-41	0xA229	Speed loop proportional gain 2	1 to 100	20	-	Changeable at any time
A2-42	0xA22A	Speed loop integral time 2	0.01s to 10.00s	1.00	s	Changeable at any time
A2-43	0xA22B	Switchover frequency 2	A2-40 to F0-10	10.00	Hz	Changeable at any time
A2-44	0xA22C	Vector control slip gain	50% to 200%	100	%	Changeable at any time
A2-45	0xA22D	Speed feedback filter time in SVC mode	0.000s to 0.100s	0.015	s	Changeable at any time

Para.	Comm. Addr.	Name	Reference	Default	Unit	Change
A2-47	0xA22F	Torque upper limit source in speed control mode (motoring)	0: Digital setting (F2-10) 1: AI1 2: AI2 3: AI3 4: Pulse reference 5: Communication 6: MIN (AI1, AI2) 7: MAX (AI1, AI2) Others: F connector	0	-	Changeable at any time
A2-48	0xA230	Torque upper limit in speed control mode	0.0% to 200.0%	150.0	%	Changeable at any time
A2-49	0xA231	Torque upper limit source in speed control mode (generating)	0: Digital setting (F2-10) 1: AI1 2: AI2 3: AI3 4: Pulse reference (DI5) 5: Communication 6: MIN (AI1, AI2) 7: MAX (AI1, AI2) 8: Digital setting (F2-12) Others: F connector	0	-	Changeable at any time
A2-50	0xA232	Torque upper limit in speed control mode (generating)	0.0% to 200.0%	150.0	%	Changeable at any time
A2-56	0xA238	Field weakening mode	0: No field weakening 1: Auto adjustment 2: Calculation+Auto adjustment	1	-	Changeable only at stop
A2-57	0xA239	Field weakening gain	1 to 50	5	-	Changeable at any time
A2-60	0xA23C	Generating power limiting	0: Disabled 1: Enabled in the whole process 2: Enabled at constant speed 3: Enabled during deceleration	0	-	Changeable at any time
A2-61	0xA23D	Generating power upper limit	0.0% to 200.0%	20.0	%	Changeable at any time
A2-62	0xA23E	Motor 2 control mode	0: SVC 1: FVC 2: V/f	2	-	Changeable only at stop
A2-64	0xA240	Torque boost	0.0% to 30.0%	3.0	%	Changeable at any time
A2-66	0xA242	V/f oscillation suppression gain	0 to 100	40	-	Changeable at any time
A2-67	0xA243	Initial position angle detection current of synchronous motor	50 to 180	80	-	Changeable only at stop

Para.	Comm. Addr.	Name	Reference	De fault	Unit	Change
A2-68	0xA244	Initial position angle detection of synchronous motor	0: Detected upon running 1: Not detected 2: Detected upon initial running after power-on	0	-	Changeable at any time
A2-70	0xA246	Salient pole rate adjustment gain of synchronous motor	0.20 to 3.00	1.00	-	Changeable at any time
A2-71	0xA247	Maximum torque-to-current ratio control of synchronous motor	0: Disabled 1: Enabled	1	-	Changeable at any time
A2-75	0xA24B	Z signal correction	0: Disabled 1: Enabled	1	-	Changeable at any time
A2-80	0xA250	Low speed carrier frequency	0.8 kHz to F0-15	2.0	kHz	Changeable at any time
A2-86	0xA256	Position lock	0 to 1	0	-	Changeable at any time
A2-87	0xA257	Switchover frequency	0.00 Hz to A2-40	0.30	Hz	Changeable at any time
A2-88	0xA258	Position lock speed loop proportional gain	1 to 100	10	-	Changeable at any time
A2-89	0xA259	Position lock speed loop integral time	0.01s to 10.00s	0.50	s	Changeable at any time
A2-92	0xA25C	Auto-tuning free mode	0: Disabled 1: Auto-tuning upon initial running after power-on 2: Auto-tuning upon running	0	-	Changeable at any time
A2-94	0xA25E	Initial position compensation angle	0.0 to 359.9	0.0	-	Changeable at any time
A3-00	0xA300	V/f curve	0: Straight-line V/f curve 1: Multi-point V/f curve 2: Reserved 3: Reserved 4: Reserved 5: Reserved 6: Reserved 7: Reserved 8: Reserved 9: Reserved 10: V/f complete separation mode 11: V/f half separation mode	0	-	Changeable only at stop
A3-01	0xA301	Torque boost	0.0% to 30.0%	3.0	%	Changeable at any time
A3-02	0xA302	Cut-off frequency of torque boost	0.00 Hz to F0-10	50.00	Hz	Changeable only at stop

Para.	Comm. Addr.	Name	Reference	De fault	Unit	Change
A3-03	0xA303	Multi-point V/f frequency 1	0.00 Hz to A3-05	0.00	Hz	Changeable only at stop
A3-04	0xA304	Multi-point V/f voltage 1	0.0% to +100.0%	0.0	%	Changeable only at stop
A3-05	0xA305	Multi-point V/f frequency 2	A3-03 to A3-07	0.00	Hz	Changeable only at stop
A3-06	0xA306	Multi-point V/f voltage 2	0.0% to +100.0%	0.0	%	Changeable only at stop
A3-07	0xA307	Multi-point V/f frequency 3	A3-05 to A2-04	0.00	Hz	Changeable only at stop
A3-08	0xA308	Multi-point V/f voltage 3	0.0% to +100.0%	0.0	%	Changeable only at stop
A3-09	0xA309	V/f slip compensation gain	0.0 to 200.0	0.0	-	Changeable at any time
A3-10	0xA30A	V/f overexcitation gain	0 to 200	64	-	Changeable at any time
A3-11	0xA30B	V/f oscillation suppression gain	0 to 100	40	-	Changeable at any time
A3-12	0xA30C	V/f oscillation suppression	0: Disabled 1: Enabled	1	-	Changeable at any time
A3-13	0xA30D	Voltage source for V/f separation	0: Digital setting (A3-14) 1: AI1 2: AI2 3: AI3 4: Pulse reference (DI5) 5: Multi-reference 6: Simple PLC 7: PID 8: Communication Others: F connector	0	-	Changeable at any time
A3-14	0xA30E	V/f separation voltage	0 V to A2-02	0	V	Changeable at any time
A3-15	0xA30F	Voltage rise time of V/f separation	0.0s to 1000.0s	0.0	s	Changeable at any time
A3-16	0xA310	Voltage fall time of V/f separation	0.0s to 1000.0s	0.0	s	Changeable at any time
A3-17	0xA311	Stop mode for V/f separation	0: Frequency and voltage decline to 0 independently 1: Frequency declines to 0 after voltage declines to 0 2: Coast to stop (new)	0	-	Changeable at any time
A3-18	0xA312	Overcurrent stall suppression action current	50% to 200%	150	%	Changeable only at stop

Para.	Comm. Addr.	Name	Reference	De fault	Unit	Change
A3-19	0xA313	Overcurrent stall suppression	0: Disabled 1: Enabled	1	-	Changeable only at stop
A3-20	0xA314	Overcurrent stall suppression gain	1 to 100	20	-	Changeable at any time
A3-21	0xA315	Compensation coefficient of speed multiplying overcurrent stall suppression action current	50% to 200%	100	%	Changeable only at stop
A3-22	0xA316	Overvoltage stall suppression action voltage	330.0 V to 800.0 V	770.0	V	Changeable at any time
A3-23	0xA317	Overvoltage stall suppression	0: Disabled 1: Enabled	1	-	Changeable only at stop
A3-24	0xA318	Overvoltage stall suppression frequency gain	1 to 100	30	-	Changeable at any time
A3-25	0xA319	Overvoltage stall suppression voltage gain	1 to 100	30	-	Changeable at any time
A3-26	0xA31A	Frequency rise threshold for overvoltage stall suppression	0 Hz to 50 Hz	5	Hz	Changeable only at stop
A3-27	0xA31B	Slip compensation filter time	0.1s to 10.0s	0.5	s	Changeable only at stop
A3-28	0xA31C	Multi-point curve source	0: 3-point curve 1: Multi-point curve module A 2: Multi-point curve module B	0	-	Changeable only at stop
A3-33	0xA321	Online torque compensation gain	80 to 150	100	-	Changeable only at stop
A3-34	0xA322	ImaxKi coefficient	10% to 1000%	100	%	Changeable only at stop
A3-35	0xA323	Overcurrent suppression threshold (relative to rated motor current)	80% to 300%	200	%	Changeable only at stop
A3-36	0xA324	Frequency threshold for overcurrent suppression field weakening	100% to 500%	100	%	Changeable only at stop
A3-37	0xA325	IT filter time	10 ms to 1000 ms	100	ms	Changeable only at stop

Para.	Comm. Addr.	Name	Reference	De fault	Unit	Change
A3-38	0xA326	Slip compensation mode	0: Disabled 1: Slip compensation without PG 2: Slip compensation with PG	1	-	Changeable only at stop
A3-39	0xA327	VdcMaxCtrl allowed runtime	0.0s to 100.0s	0.0	s	Changeable only at stop
A3-40	0xA328	Upper limit of V/f separation voltage	50.0% to 200.0%	100.0	%	Changeable only at stop
A3-41	0xA329	RFG time of V/f separation frequency	0: RFG time forced to 0 1: Preset RFG time	0	-	Changeable only at stop
A3-42	0xA32A	Cut-off frequency of V/f oscillation suppression filter	1.0 Hz to 50.0 Hz	8.0	Hz	Changeable at any time
A3-43	0xA32B	Cut-off frequency threshold for V/f oscillation suppression	10 Hz to 3000 Hz	200	Hz	Changeable at any time
A3-44	0xA32C	VdcMaxCtrl feedforward coefficient	0% to 500%	0	%	Changeable at any time
A3-50	0xA332	PMVVC low-speed IF	0: Disabled 1: Enabled	1	-	Changeable only at stop
A3-51	0xA333	PMVVC low-speed IF current	30 to 250	100	-	Changeable only at stop
A3-52	0xA334	PMVVC low-speed IF speed switching threshold	2.0% to 100.0%	10.0	%	Changeable only at stop
A3-53	0xA335	PMVVC oscillation suppression gain coefficient	0 to 500	100	-	Changeable at any time
A3-54	0xA336	PMVVC filter time coefficient	0 to 500	100	-	Changeable at any time
A3-55	0xA337	PMVVC energy conservation control mode	0: Fixed straight-line V/f curve 1: Fixed 30% reactive current 2: MTPA control	2	-	Changeable only at stop
A4-00	0xA400	Control channel	0: Control channel 1 1: Control channel 2	0	-	Changeable at any time

Para.	Comm. Addr.	Name	Reference	De fault	Unit	Change
A4-01	0xA401	Custom OFF1 source	0: Inactive 3: DI1 4: DI2 5: DI3 6: DI4 7: DI5 8: DI6 9: DI7 10: DI8 11: DI9 12: DI10 13: DI11 14: DI12 15: DI13 16: DI14 17: DI15 18: DI16 Others: B connector	0	-	Changeable at any time
A4-02	0xA402	Custom OFF2 source 1	0: Active 1: Inactive 3: DI1 4: DI2 5: DI3 6: DI4 7: DI5 8: DI6 9: DI7 10: DI8 11: DI9 12: DI10 13: DI11 14: DI12 15: DI13 16: DI14 17: DI15 18: DI16 Others: B connector	1	-	Changeable at any time
A4-03	0xA403	Custom OFF3 source 1	Same as A4-02	1	-	Changeable at any time

Para.	Comm. Addr.	Name	Reference	De fault	Unit	Change
A4-04	0xA404	Custom running permission source	0: Not permitted 1: Permitted 3: DI1 4: DI2 5: DI3 6: DI4 7: DI5 8: DI6 9: DI7 10: DI8 11: DI9 12: DI10 13: DI11 14: DI12 15: DI13 16: DI14 17: DI15 18: DI16 Others: B connector	1	-	Changeable at any time
A4-05	0xA405	Custom fault reset source 1	0: Inactive 1: Active 3: DI1 4: DI2 5: DI3 6: DI4 7: DI5 8: DI6 9: DI7 10: DI8 11: DI9 12: DI10 13: DI11 14: DI12 15: DI13 16: DI14 17: DI15 18: DI16 Others: B connector	0	-	Changeable at any time
A4-06	0xA406	Custom JOG1 source	Same as A4-01	0	-	Changeable at any time
A4-07	0xA407	Custom JOG2 source	Same as A4-01	0	-	Changeable at any time
A4-08	0xA408	Custom speed negation source	Same as A4-05	0	-	Changeable at any time

Para.	Comm. Addr.	Name	Reference	De fault	Unit	Change
A4-10	0xA40A	OFF2 source 2	0: Active 1: Inactive 2: Terminal function input 3: DI1 4: DI2 5: DI3 6: DI4 7: DI5 8: DI6 9: DI7 10: DI8 11: DI9 12: DI10 13: DI11 14: DI12 15: DI13 16: DI14 17: DI15 18: DI16 Others: B connector	1	-	Changeable at any time
A4-11	0xA40B	OFF2 source 3	Same as A4-02	1	-	Changeable at any time
A4-12	0xA40C	OFF3 source 2	Same as A4-10	1	-	Changeable at any time
A4-13	0xA40D	OFF3 source 3	Same as A4-02	1	-	Changeable at any time
A4-14	0xA40E	Fault reset source 2	Same as A4-10	0	-	Changeable at any time
A4-15	0xA40F	Fault reset source 3	0: Inactive 1: Active 3: DI1 4: DI2 5: DI3 6: DI4 7: DI5 8: DI6 9: DI7 10: DI8 11: DI9 12: DI10 13: DI11 14: DI12 15: DI13 16: DI14 17: DI15 18: DI16 Others: B connector	0	-	Changeable at any time

Para.	Comm. Addr.	Name	Reference	De fault	Unit	Change
A4-16	0xA410	RFG prohibition source	Same as A4-02	1	-	Changeable at any time
A4-17	0xA411	RFG pause source	Same as A4-10	1	-	Changeable at any time
A4-18	0xA412	Source of setting RFG reference to 0	Same as A4-10	1	-	Changeable at any time
A4-21	0xA415	Custom OFF1 source	Same as A4-01	0	-	Changeable at any time
A4-22	0xA416	Custom OFF2 source 1	Same as A4-02	1	-	Changeable at any time
A4-23	0xA417	Custom OFF3 source 1	Same as A4-02	1	-	Changeable at any time
A4-24	0xA418	Custom running permission source	A4-04	1	-	Changeable at any time
A4-25	0xA419	Custom fault reset source 1	Same as A4-01	0	-	Changeable at any time
A4-26	0xA41A	Custom JOG1 source	Same as A4-01	0	-	Changeable at any time
A4-27	0xA41B	Custom JOG2 source	Same as A4-01	0	-	Changeable at any time
A4-28	0xA41C	Custom speed negation source	0: Inactive 1: Active 3: DI1 4: DI2 5: DI3 6: DI4 7: DI5 8: DI6 9: DI7 10: DI8 11: DI9 12: DI10 13: DI11 14: DI12 15: DI13 16: DI14 17: DI15 18: DI16 Others: B connector	0	-	Changeable at any time
A4-30	0xA41E	OFF2 source 2	Same as A4-10	1	-	Changeable at any time
A4-31	0xA41F	OFF2 source 3	Same as A4-02	1	-	Changeable at any time
A4-32	0xA420	OFF3 source 2	Same as A4-10	1	-	Changeable at any time

Para.	Comm. Addr.	Name	Reference	De fault	Unit	Change
A4-33	0xA421	OFF3 source 3	Same as A4-02	1	-	Changeable at any time
A4-34	0xA422	Fault reset source 2	Same as A4-10	0	-	Changeable at any time
A4-35	0xA423	Fault reset source 3	A4-15	0	-	Changeable at any time
A4-36	0xA424	RFG prohibition source	Same as A4-02	1	-	Changeable at any time
A4-37	0xA425	RFG pause source	Same as A4-10	1	-	Changeable at any time
A4-38	0xA426	Source of setting RFG reference to 0	Same as A4-10	1	-	Changeable at any time
A4-41	0xA429	Terminal start/stop module A/B	0: Module A 1: Module B	0	-	Changeable at any time
A4-43	0xA42B	Input 1 of terminal start/stop module A	0: Active 2: Terminal function input 3: DI1 4: DI2 5: DI3 6: DI4 7: DI5 8: DI6 9: DI7 10: DI8 11: DI9 12: DI10 13: DI11 14: DI12 15: DI13 16: DI14 17: DI15 18: DI16 Others: B connector	2	-	Changeable at any time
A4-44	0xA42C	Input 2 of terminal start/stop command A	A4-43	2	-	Changeable at any time
A4-45	0xA42D	Input 3 of terminal start/stop command A	A4-43	2	-	Changeable at any time

Para.	Comm. Addr.	Name	Reference	De fault	Unit	Change
A4-46	0xA42E	Running permission source of terminal start/stop module A	0: Inactive 1: Active 2: Terminal function input 3: DI1 4: DI2 5: DI3 6: DI4 7: DI5 8: DI6 9: DI7 10: DI8 11: DI9 12: DI10 13: DI11 14: DI12 15: DI13 16: DI14 17: DI15 18: DI16 Others: B connector	1	-	Changeable at any time
A4-47	0xA42F	Fault reset source of terminal start/ stop module A	A4-46	0	-	Changeable at any time
A4-48	0xA430	JOG1 source of terminal start/stop module A	A4-43	2	-	Changeable at any time
A4-49	0xA431	JOG2 source of terminal start/stop module A	A4-43	2	-	Changeable at any time
A4-50	0xA432	Control mode of terminal start/stop module B	0: Two-wire mode 1 1: Two-wire mode 2 2: Three-wire mode 1 3: Three-wire mode 2	0	-	Changeable at any time
A4-51	0xA433	Input 1 of terminal start/stop module B	A4-43	2	-	Changeable at any time
A4-52	0xA434	Input 2 of terminal start/stop command B	A4-43	2	-	Changeable at any time
A4-53	0xA435	Input 3 of terminal start/stop command B	A4-43	2	-	Changeable at any time
A4-54	0xA436	Running permission source of terminal start/stop module B	A4-46	1	-	Changeable at any time
A4-55	0xA437	Fault reset source of terminal start/ stop module B	A4-46	2	-	Changeable at any time

Para.	Comm. Addr.	Name	Reference	De fault	Unit	Change
A4-56	0xA438	JOG1 source of terminal start/stop module B	A4-43	2	-	Changeable at any time
A4-57	0xA439	JOG2 source of terminal start/stop module B	A4-43	2	-	Changeable at any time
A4-58	0xA43A	Reserved	0 to 65535	0	-	Changeable at any time
A4-59	0xA43B	Reserved	0 to 65535	0	-	Changeable at any time
A4-60	0xA43C	Reserved	0 to 65535	0	-	Changeable at any time
A4-61	0xA43D	Source of supplementary speed in speed control	0: 0 1: AI1 2: AI2 3: AI3 4: Pulse reference 5: Communication 6: Multi-reference 7: Motor-driven potentiometer 8: PID Others: F connector	0	-	Changeable at any time
A4-62	0xA43E	JOG1 speed source	0: Digital setting 1: AI1 2: AI2 3: AI3 4: Pulse reference 5: Communication 6: Multi-reference 7: Motor-driven potentiometer 8: PID Others: F connector	0	-	Changeable at any time
A4-65	0xA441	Ramp rounding mode	0: Incontinuous smoothing 1: Continuous smoothing	0	-	Changeable at any time
A4-66	0xA442	Jog ramp source	0: Normal running ramp time 1: Jog ramp time	1	-	Changeable at any time
A4-67	0xA443	Proportion of starting arc in acceleration	0.0% to +100.0%	30.0	%	Changeable only at stop
A4-68	0xA444	Proportion of end arc in acceleration	0.0% to +100.0%	30.0	%	Changeable only at stop
A4-69	0xA445	Proportion of starting arc in deceleration	0.0% to +100.0%	30.0	%	Changeable only at stop
A4-70	0xA446	Proportion of end arc in deceleration	0.0% to +100.0%	30.0	%	Changeable only at stop

Para.	Comm. Addr.	Name	Reference	Default	Unit	Change
A4-71	0xA447	Ramp output forcing enable	0: Disabled 1: Enabled 3: DI1 4: DI2 5: DI3 6: DI4 7: DI5 8: DI6 9: DI7 10: DI8 11: DI9 12: DI10 13: DI11 14: DI12 15: DI13 16: DI14 17: DI15 18: DI16 Others: B connector	0	-	Changeable at any time
A4-72	0xA448	Ramp output force value	0: 100% 1: AI1 2: AI2 3: AI3 4: Pulse reference 5: Communication 6: Multi-reference 7: Motor-driven potentiometer 8: PID Others: F connector	0	-	Changeable at any time
A4-73	0xA449	Ramp input ramp shift enable	Same as A4-71	0	-	Changeable at any time
A4-74	0xA44A	Ramp input update interval	2 ms to 10000 ms	50	ms	Changeable at any time
A4-75	0xA44B	Ramp tracking enable	0: Disabled 1: Enabled	0	-	Changeable at any time
A4-76	0xA44C	Ramp tracking error	0.0% to +100.0%	10.0	%	Changeable at any time
A4-77	0xA44D	Frequency acceleration time in torque control	0.0s to 6500.0s	0.0	s	Changeable at any time
A4-78	0xA44E	Frequency deceleration time in torque control	0.0s to 6500.0s	0.0	s	Changeable at any time
A4-79	0xA44F	Forced use of the fourth set of time in torque control	0 to 1	1	-	Changeable at any time

Para.	Comm. Addr.	Name	Reference	De fault	Unit	Change
A4-80	0xA450	Speed limited running mode	0: Run with a maximum speed limit 1: Run at a specified safe speed	1	-	Changeable at any time
A4-81	0xA451	Forward speed limit in restricted running mode	0.0% to +100.0%	100.0	%	Changeable at any time
A4-82	0xA452	Reverse speed limit in restricted running mode	0.0% to +100.0%	100.0	%	Changeable at any time
A4-83	0xA453	Maximum motoring power in restricted running mode	0.0% to 400.0%	50.0	%	Changeable at any time
A4-84	0xA454	Maximum regenerative power in restricted running mode	0.0% to 400.0%	50.0	%	Changeable at any time
A4-85	0xA455	Forward torque limit in restricted running mode	0.0% to 400.0%	50.0	%	Changeable at any time
A4-86	0xA456	Reverse torque limit in restricted running mode	0.0% to 400.0%	50.0	%	Changeable at any time
A4-87	0xA457	Maximum allowable current in restricted running mode	0.0% to 400.0%	90.0	%	Changeable at any time
A5-00	0xA500	DPWM switchover frequency upper limit	5.00 Hz to F0-10	15.00	Hz	Changeable at any time
A5-01	0xA501	PWM modulation mode	0: Asynchronous modulation 1: Synchronous modulation	0	-	Changeable at any time
A5-02	0xA502	Deadzone compensation	0: Disabled 1: Enabled (compensation mode 1)	1	-	Changeable at any time
A5-03	0xA503	Random PWM depth	0 to 10	0	-	Changeable at any time
A5-04	0xA504	Pulse-by-pulse current limit protection	0: Disabled 1: Enabled	0	-	Changeable at any time
A5-05	0xA505	Voltage overmodulation coefficient	100% to 110%	105	%	Changeable at any time
A5-06	0xA506	Undervoltage threshold	140.0 V to 420.0 V	350.0	V	Changeable at any time
A5-08	0xA508	Low speed carrier frequency upper limit	0.0 kHz to 8.0 kHz	0.0	kHz	Changeable at any time

Para.	Comm. Addr.	Name	Reference	De fault	Unit	Change
A5-09	0xA509	Overvoltage threshold	330.0 V to 820.0 V	820.0	V	Changeable at any time
A5-10	0xA50A	Energy conservation control	0: Disabled 1: Enabled	0	-	Changeable at any time
A6-00	0xA600	Minimum input of AI curve 4	–10 V to A6-02	0.00	V	Changeable at any time
A6-01	0xA601	Percentage corresponding to minimum input of AI curve 4	–100% to +100.0%	0.0	%	Changeable at any time
A6-02	0xA602	Inflection 1 input of AI curve 4	A6-00 to A6-04	3.00	V	Changeable at any time
A6-03	0xA603	Percentage corresponding to inflection 1 input of AI curve 4	–100% to +100.0%	30.0	%	Changeable at any time
A6-04	0xA604	Inflection 2 input of AI curve 4	A6-02 to A6-06	6.00	V	Changeable at any time
A6-05	0xA605	Percentage corresponding to inflection 2 input of AI curve 4	–100% to +100.0%	60.0	%	Changeable at any time
A6-06	0xA606	Maximum input of AI curve 4	A6-04 to 10.00 V	10.00	V	Changeable at any time
A6-07	0xA607	Percentage corresponding to maximum input of AI curve 4	–100% to +100.0%	100.0	%	Changeable at any time
A6-08	0xA608	Minimum input of AI curve 5	–10 V to A6-10	–10	V	Changeable at any time
A6-09	0xA609	Percentage corresponding to minimum input of AI curve 5	–100% to +100.0%	–100	%	Changeable at any time
A6-10	0xA60A	Inflection 1 input of AI curve 5	A6-08 to A6-12	–3	V	Changeable at any time
A6-11	0xA60B	Percentage corresponding to inflection 1 input of AI curve 5	–100% to +100.0%	–30	%	Changeable at any time
A6-12	0xA60C	Inflection 2 input of AI curve 5	A6-10 to A6-14	3.00	V	Changeable at any time

Para.	Comm. Addr.	Name	Reference	De fault	Unit	Change
A6-13	0xA60D	Percentage corresponding to inflection 2 input of AI curve 5	–100% to +100.0%	30.0	%	Changeable at any time
A6-14	0xA60E	Maximum input of AI curve 5	A6-12 to 10.00	10.00	V	Changeable at any time
A6-15	0xA60F	Percentage corresponding to maximum input of AI curve 5	–100% to +100.0%	100.0	%	Changeable at any time
A6-24	0xA618	AI1 skip point	–100% to +100.0%	0.0	%	Changeable at any time
A6-25	0xA619	AI1 skip amplitude	0.0% to +100.0%	0.1	%	Changeable at any time
A6-26	0xA61A	AI2 skip point	–100% to +100.0%	0.0	%	Changeable at any time
A6-27	0xA61B	AI2 skip amplitude	0.0% to +100.0%	0.1	%	Changeable at any time
A6-28	0xA61C	AI3 skip point	–100% to +100.0%	0.0	%	Changeable at any time
A6-29	0xA61D	AI3 skip amplitude	0.0% to +100.0%	0.1	%	Changeable at any time
A6-30	0xA61E	AI automatic curve calibration	Ones: Point selection (for setting) 0: Disabled 1: Point 1 2: Point 2 3: Point 3 4: Point 4 Tens: AI channel selection (for setting) 0: Disabled 1: AI1 2: AI2 3: AI3 Hundreds: Enable control (for setting) 0: Disabled 1: Enabled Thousands: X-point curve (for display) 0: The function is disabled or the channel is not selected. 2: 2-point curve 4: 4-point curve Ten thousands: Reserved	0	-	Changeable at any time
A6-31	0xA61F	AI1 input enable	0: Disabled 1: Enabled Others: B connector	1	-	Changeable at any time

Para.	Comm. Addr.	Name	Reference	De fault	Unit	Change
A6-32	0xA620	AI2 input enable	0: Disabled 1: Enabled Others: B connector	1	-	Changeable at any time
A6-33	0xA621	AI3 input enable	0: Disabled 1: Enabled Others: B connector	1	-	Changeable at any time
A6-34	0xA622	AI polarity	Ones: AI1 0: Normal 1: Absolute value 2: Negated value 3: Negated absolute value Tens: AI2 0: Normal 1: Absolute value 2: Negated value 3: Negated absolute value Hundreds: AI3 0: Normal 1: Absolute value 2: Negated value 3: Negated absolute value	0	-	Changeable at any time
A6-35	0xA623	AI hardware source	Ones: AI1 source 1: Hardware sampling 1: Force setpoint Tens: AI2 source 1: Hardware sampling 1: Force setpoint Hundreds: AI3 source 1: Hardware sampling 1: Force setpoint	0	-	Changeable only at stop
A6-36	0xA624	AI1 force setpoint	–10 V to +10.00 V	0.00	V	Changeable at any time
A6-37	0xA625	AI2 force setpoint	–10 V to +10.00 V	0.00	V	Changeable at any time
A6-38	0xA626	AI3 force setpoint	–10 V to +10.00 V	0.00	V	Changeable at any time
A6-39	0xA627	High level for AI used as DI	5.5 V to 9.0 V	7.0	V	Changeable at any time
A6-40	0xA628	Low level for AI used as DI	1.0 V to 4.5 V	3.0	V	Changeable at any time
A6-41	0xA629	AI1 gain	–10 to +10.00	1.00	-	Changeable at any time
A6-42	0xA62A	AI1 offset	–10 V to +10.00 V	0.00	V	Changeable at any time
A6-43	0xA62B	AI1 denoising threshold	0.0% to +100.0%	0.5	%	Changeable at any time

Para.	Comm. Addr.	Name	Reference	De fault	Unit	Change
A6-44	0xA62C	AI1 deadzone width	0.0% to +100.0%	0.5	%	Changeable at any time
A6-45	0xA62D	AI1 input upper limit	A6-46 to 10.00 V	8.00	V	Changeable at any time
A6-46	0xA62E	AI1 input lower limit	0.00 V to A6-45	2.00	V	Changeable at any time
A6-47	0xA62F	AI2 gain	–10 to +10.00	1.00	-	Changeable at any time
A6-48	0xA630	AI2 offset	–10 V to +10.00 V	0.00	V	Changeable at any time
A6-49	0xA631	AI2 denoising threshold	0.0% to +100.0%	0.5	%	Changeable at any time
A6-50	0xA632	AI2 deadzone width	0.0% to +100.0%	0.5	%	Changeable at any time
A6-51	0xA633	AI2 input upper limit	A6-52 to 10.00 V	8.00	V	Changeable at any time
A6-52	0xA634	AI2 input lower limit	0.00 V to A6-51	2.00	V	Changeable at any time
A6-53	0xA635	AI3 gain	–10 to +10.00	1.00	-	Changeable at any time
A6-54	0xA636	AI3 offset	–10 V to +10.00 V	0.00	V	Changeable at any time
A6-55	0xA637	AI3 denoising threshold	0.0% to +100.0%	0.5	%	Changeable at any time
A6-56	0xA638	AI3 deadzone width	0.0% to +100.0%	0.5	%	Changeable at any time
A6-57	0xA639	AI3 input upper limit	A6-58 to 10.00 V	8.00	V	Changeable at any time
A6-58	0xA63A	AI3 input lower limit	0.00 V to A6-57	2.00	V	Changeable at any time
A6-59	0xA63B	AI input protection time	0.00s to 1.00s	0.01	s	Changeable at any time
A8-00	0xA800	Master/Slave control function	0: Disabled 1: Enabled	0	-	Changeable at any time
A8-01	0xA801	Master/Slave selection	0: Master 1: Slave	0	-	Changeable at any time

Para.	Comm. Addr.	Name	Reference	De fault	Unit	Change
A8-02	0xA802	Slave following master's command	Ones: Whether the slave follows the operation command of the master 0: No 1: Yes Tens: Whether the slave fault information is transmitted 0: No 1: Yes Hundreds: Whether the master reports a fault (ERR-16) upon disconnection of the slave 0: No 1: Yes	11	-	Changeable only at stop
A8-03	0xA803	Function of slave RX data	0: Running frequency 1: Target frequency	0	-	Changeable at any time
A8-04	0xA804	RX data zero offset	–100% to +100.00%	0.00	%	Changeable at any time
A8-05	0xA805	RX data gain	–10% to +100.00%	1.00	%	Changeable at any time
A8-06	0xA806	Master-slave communication heartbeat time	0.0s to 10.0s	1.0	s	Changeable at any time
A8-07	0xA807	Master data TX cycle in point-to-point communication	0.001s to 10.000s	0.001	s	Changeable at any time
A8-08	0xA808	Zero offset of RX frequency data	–10000 to +10000	0	-	Changeable at any time
A8-09	0xA809	Gain of RX frequency data	–1000 to +1000	100	-	Changeable at any time
A8-10	0xA80A	Maximum forward deviation of slave frequency	0 to 10000	1000	-	Changeable at any time
A8-11	0xA80B	Maximum reverse deviation of slave frequency	0.20 Hz to 10.00 Hz	0.50	Hz	Changeable at any time
A9-00	0xA900	Number of parallel motors	1 to 200	1	-	Changeable only at stop

Para.	Comm. Addr.	Name	Reference	De fault	Unit	Change
A9-01	0xA901	Motor information command word	Bit00: Mutual inductance curve 0: Disabled 1: Enabled Bit01: D- and Q-axis inductance curve 0: Disabled 1: Enabled Bit02: Rotor resistance online auto-tuning 0: Disabled 1: Enabled Bit03: Rotor resistance online auto-tuning method 0: Amplitude 1: Phase Bit04: Motor thermal model 0: Disabled 1: Enabled Bit05: Temperature source of motor thermal model 0: Estimated temperature 1: Temperature detected by sensor Bit06: Torque coefficient calculation of asynchronous motor 0: Torque formula 1: Current distribution Bit07: Torque coefficient calculation of synchronous motor 0: Torque formula 1: Torque matching the rated torque Bit08: Zero speed friction torque calculation 0: Torque linearly decreasing to zero 1: Torque to maintain minimum speed Bit09: Calculation of model parameters based on nameplate parameters 0: Disabled 1: Enabled Bit10: Confirmation of calculating model parameters based on nameplate parameters 0: Default 1: Confirm	0x3	-	Changeable only at stop
A9-02	0xA902	Number of motor pole pairs	0 to 64	0	-	Changeable only at stop
A9-03	0xA903	Motor power factor	0.600 to 1.000	0.860	-	Changeable only at stop
A9-05	0xA905	Expansion card	1: Expansion card 1 2: Expansion card 2	1	-	Changeable only at stop
A9-06	0xA906	ABZ encoder speed measurement mode at low speed	0: Maintain 1: Attenuate 2: Optimized solution	2	-	Changeable only at stop

Para.	Comm. Addr.	Name	Reference	De fault	Unit	Change
A9-07	0xA907	Encoder speed measurement filter time constant	0.000s to 10.000s	0.004	s	Changeable at any time
A9-08	0xA908	Encoder wire breakage software detection coefficient	0.000 to 8.000	1.000	-	Changeable at any time
A9-09	0xA909	Encoder control word	Bit00: Speed measurement 0: Disabled 1: Enabled Bit01: Software detection of wire breakage 0: Disabled 1: Enabled Bit02: Glitch removal 0: Disabled 1: Enabled Bit03: ABZ encoder speed measurement mode 0: Quadruplicated frequency 1: Single pulse	0	-	Changeable only at stop
A9-10	0xA90A	Speed measurement exception count threshold	1 to 100	10	-	Changeable only at stop
A9-11	0xA90B	Motor gear ratio (numerator)	1 to 65535	1	-	Changeable only at stop
A9-12	0xA90C	Motor gear ratio (denominator)	1 to 65535	1	-	Changeable only at stop
A9-13	0xA90D	External input source of encoder	0: 0 1: AI1 2: AI2 3: AI3 4: Pulse reference 5: Communication 6: Multi-reference 7: Motor-driven potentiometer 8: PID Others: F connector	0	-	Changeable only at stop
A9-15	0xA90F	Stator leakage inductance	0.000 mH to 65.535 mH	6.540	mH	Changeable only at stop
A9-16	0xA910	Electromechanical time constant	1 ms to 65535 ms	100	ms	Unchangea ble
A9-17	0xA911	Inertia ratio	0.0% to 6553.5%	120.0	%	Changeable only at stop
A9-18	0xA912	Friction torque	0.0% to 6553.5%	2.0	%	Changeable only at stop

Para.	Comm. Addr.	Name	Reference	De fault	Unit	Change
A9-19	0xA913	Excitation current coefficient 1 of mutual inductance curve (rated)	5.0% to 100.0%	50.0	%	Changeable only at stop
A9-20	0xA914	Excitation current coefficient 2 of mutual inductance curve (rated)	5.0% to 100.0%	75.0	%	Changeable only at stop
A9-21	0xA915	Excitation current coefficient 3 of mutual inductance curve	100.0% to 800.0%	150.0	%	Changeable only at stop
A9-22	0xA916	Excitation current coefficient 4 of mutual inductance curve	100.0% to 800.0%	210.0	%	Changeable only at stop
A9-23	0xA917	Flux coefficient 1 of mutual inductance curve (rated)	10.0% to 100.0%	50.0	%	Changeable only at stop
A9-24	0xA918	Flux coefficient 2 of mutual inductance curve (rated)	10.0% to 100.0%	85.0	%	Changeable only at stop
A9-25	0xA919	Flux coefficient 3 of mutual inductance curve	100.0% to 300.0%	115.0	%	Changeable only at stop
A9-26	0xA91A	Flux coefficient 4 of mutual inductance curve	100.0% to 300.0%	125.0	%	Changeable only at stop
A9-27	0xA91B	Speed point 1 of friction curve	0 RPM to 30000 RPM	15	RPM	Changeable only at stop
A9-28	0xA91C	Speed point 2 of friction curve	0 RPM to 30000 RPM	30	RPM	Changeable only at stop
A9-29	0xA91D	Speed point 3 of friction curve	0 RPM to 30000 RPM	60	RPM	Changeable only at stop
A9-30	0xA91E	Speed point 4 of friction curve	0 RPM to 30000 RPM	120	RPM	Changeable only at stop
A9-31	0xA91F	Speed point 5 of friction curve	0 RPM to 30000 RPM	150	RPM	Changeable only at stop
A9-32	0xA920	Speed point 6 of friction curve	0 RPM to 30000 RPM	300	RPM	Changeable only at stop
A9-33	0xA921	Speed point 7 of friction curve	0 RPM to 30000 RPM	600	RPM	Changeable only at stop
A9-34	0xA922	Speed point 8 of friction curve	0 RPM to 30000 RPM	1200	RPM	Changeable only at stop
A9-35	0xA923	Speed point 9 of friction curve	0 RPM to 30000 RPM	1500	RPM	Changeable only at stop

Para.	Comm. Addr.	Name	Reference	De fault	Unit	Change
A9-36	0xA924	Speed point 10 of friction curve	0 RPM to 30000 RPM	3000	RPM	Changeable only at stop
A9-37	0xA925	Torque point 1 of friction curve	–320 N·m to +320 N·m	0.00	N·m	Changeable only at stop
A9-38	0xA926	Torque point 2 of friction curve	–320 N·m to +320 N·m	0.00	N·m	Changeable only at stop
A9-39	0xA927	Torque point 3 of friction curve	–320 N·m to +320 N·m	0.00	N·m	Changeable only at stop
A9-40	0xA928	Torque point 4 of friction curve	–320 N·m to +320 N·m	0.00	N·m	Changeable only at stop
A9-41	0xA929	Torque point 5 of friction curve	–320 N·m to +320 N·m	0.00	N·m	Changeable only at stop
A9-42	0xA92A	Torque point 6 of friction curve	–320 N·m to +320 N·m	0.00	N·m	Changeable only at stop
A9-43	0xA92B	Torque point 7 of friction curve	–320 N·m to +320 N·m	0.00	N·m	Changeable only at stop
A9-44	0xA92C	Torque point 8 of friction curve	–320 N·m to +320 N·m	0.00	N·m	Changeable only at stop
A9-45	0xA92D	Torque point 9 of friction curve	–320 N·m to +320 N·m	0.00	N·m	Changeable only at stop
A9-46	0xA92E	Torque point 10 of friction curve	–320 N·m to +320 N·m	0.00	N·m	Changeable only at stop
A9-47	0xA92F	Current coefficient starting point of D- and Q-axis inductance curve	–800% to +800.0%	–200	%	Changeable only at stop
A9-48	0xA930	Current coefficient end point of D- and Q-axis inductance curve	–800% to +800.0%	200.0	%	Changeable only at stop
A9-49	0xA931	D axis inductance 1 of D- and Q-axis inductance curve	0.0% to 6553.5%	100.0	%	Changeable only at stop
A9-50	0xA932	D axis inductance 2 of D- and Q-axis inductance curve	0.0% to 6553.5%	100.0	%	Changeable only at stop
A9-51	0xA933	D axis inductance 3 of D- and Q-axis inductance curve	0.0% to 6553.5%	100.0	%	Changeable only at stop
A9-52	0xA934	D axis inductance 4 of D- and Q-axis inductance curve	0.0% to 6553.5%	100.0	%	Changeable only at stop
A9-53	0xA935	D axis inductance 5 of D- and Q-axis inductance curve	0.0% to 6553.5%	100.0	%	Changeable only at stop

Para.	Comm. Addr.	Name	Reference	De fault	Unit	Change
A9-54	0xA936	D axis inductance 6 of D- and Q-axis inductance curve	0.0% to 6553.5%	100.0	%	Changeable only at stop
A9-55	0xA937	D axis inductance 7 of D- and Q-axis inductance curve	0.0% to 6553.5%	100.0	%	Changeable only at stop
A9-56	0xA938	D axis inductance 8 of D- and Q-axis inductance curve	0.0% to 6553.5%	100.0	%	Changeable only at stop
A9-57	0xA939	D axis inductance 9 of D- and Q-axis inductance curve	0.0% to 6553.5%	100.0	%	Changeable only at stop
A9-58	0xA93A	D axis inductance 10 of D- and Q-axis inductance curve	0.0% to 6553.5%	100.0	%	Changeable only at stop
A9-59	0xA93B	D axis inductance 11 of D- and Q-axis inductance curve	0.0% to 6553.5%	100.0	%	Changeable only at stop
A9-60	0xA93C	D axis inductance 12 of D- and Q-axis inductance curve	0.0% to 6553.5%	100.0	%	Changeable only at stop
A9-61	0xA93D	Q axis inductance 1 of D- and Q-axis inductance curve	0.0% to 6553.5%	100.0	%	Changeable only at stop
A9-62	0xA93E	Q axis inductance 2 of D- and Q-axis inductance curve	0.0% to 6553.5%	100.0	%	Changeable only at stop
A9-63	0xA93F	Q axis inductance 3 of D- and Q-axis inductance curve	0.0% to 6553.5%	100.0	%	Changeable only at stop
A9-64	0xA940	Q axis inductance 4 of D- and Q-axis inductance curve	0.0% to 6553.5%	100.0	%	Changeable only at stop
A9-65	0xA941	Q axis inductance 5 of D- and Q-axis inductance curve	0.0% to 6553.5%	100.0	%	Changeable only at stop
A9-66	0xA942	Q axis inductance 6 of D- and Q-axis inductance curve	0.0% to 6553.5%	100.0	%	Changeable only at stop
A9-67	0xA943	Q axis inductance 7 of D- and Q-axis inductance curve	0.0% to 6553.5%	100.0	%	Changeable only at stop
A9-68	0xA944	Q axis inductance 8 of D- and Q-axis inductance curve	0.0% to 6553.5%	100.0	%	Changeable only at stop

Para.	Comm. Addr.	Name	Reference	Default	Unit	Change
A9-69	0xA945	Q axis inductance 9 of D- and Q-axis inductance curve	0.0% to 6553.5%	100.0	%	Changeable only at stop
A9-70	0xA946	Q axis inductance 10 of D- and Q-axis inductance curve	0.0% to 6553.5%	100.0	%	Changeable only at stop
A9-71	0xA947	Q axis inductance 11 of D- and Q-axis inductance curve	0.0% to 6553.5%	100.0	%	Changeable only at stop
A9-72	0xA948	Q axis inductance 12 of D- and Q-axis inductance curve	0.0% to 6553.5%	100.0	%	Changeable only at stop
AA-00	0xAA00	Parameter auto-tuning upon startup	Bit00: Synchronous motor pole position auto-tuning upon startup 0: Disabled 1: Enabled Bit01: Quick stator resistance auto-tuning upon startup 0: Disabled 1: Enabled Bit02–Bit03: HFI pole position auto-tuning 0: Disabled 1: Enabled 2: Adaptive Bit04: IGBT shoot-through self-check upon startup 0: Disabled 1: Enabled Bit05: Short-to-ground self-check upon startup (reserved) 0: Disabled 1: Enabled Bit06: Phase loss self-check upon startup (reserved) 0: Disabled 1: Enabled	1	-	Changeable only at stop
AA-01	0xAA01	Auto-tuning direction	0 to 1	1	-	Changeable only at stop
AA-02	0xAA02	Oscillation suppression gain of synchronous motor back EMF auto-tuning	0.0 to 30.0	3.2	-	Changeable only at stop
AA-03	0xAA03	Target speed of rotation auto-tuning	30.0% to 100.0%	70.0	%	Changeable only at stop

Para.	Comm. Addr.	Name	Reference	De fault	Unit	Change
AA-04	0xAA04	Target speed 1 of inertia auto-tuning	0.0% to AA-05	40.0	%	Changeable only at stop
AA-05	0xAA05	Target speed 2 of inertia auto-tuning	AA-04 to 100.0%	60.0	%	Changeable only at stop
AA-06	0xAA06	Overcurrent prevention of mutual inductance saturation curve	0 to 1	1	-	Changeable only at stop
AA-07	0xAA07	Auto-tuning items	Bit00: Speed loop parameter adaptation 0: Disabled 1: Enabled Bit01: Current loop parameter adaptation 0: Disabled 1: Enabled Bit02: Drive nonlinear auto-tuning 0: Disabled 1: Enabled Bit03: Inter-phase deviation coefficient auto-tuning 0: Disabled 1: Enabled Bit04: Auto-tuning of initial pole position of synchronous motor 0: Disabled 1: Enabled Bit05: Auto-tuning of D- and Q-axis inductance model of synchronous motor 0: Disabled 1: Enabled Bit06: System inertia auto-tuning 0: Disabled 1: Enabled Bit07: HFI pole position auto-tuning 0: Disabled 1: Enabled	117	-	Changeable only at stop
AA-08	0xAA08	OFF3 stop mode	0: Quick stop 1: Stop at maximum capability	0	-	Changeable only at stop
AA-09	0xAA09	Stop mode during running	0: OFF1 stop mode 1: OFF2 stop mode 2: OFF3 stop mode	1	-	Changeable only at stop
AA-10	0xAA0A	Stop mode for torque control	0: Coast to stop forcibly 1: Switch to speed control mode and then stop 2: Maintain torque control mode until zero speed and then block	1	-	Changeable only at stop
AA-12	0xAA0C	Proportional gain adjustment coefficient	0.1 to 2.0	1.0	-	Changeable at any time

Para.	Comm. Addr.	Name	Reference	De fault	Unit	Change
AA-13	0xAA0D	Integral gain adjustment coefficient	0.1 to 2.0	1.0	-	Changeable at any time
AA-14	0xAA0E	Zero-speed threshold	0.1% to 200.0%	2.0	%	Changeable at any time
AA-15	0xAA0F	Zero-speed stop delay	0.00s to 10.00s	0.10	s	Changeable only at stop
AA-16	0xAA10	Reference source execution interval	0 to 20	4	-	Changeable only at stop
AA-17	0xAA11	Trial current for speed tracking of synchronous motor	5.0% to 50.0%	10.0	%	Changeable only at stop
AA-18	0xAA12	Minimum frequency for speed tracking of synchronous motor	0.0 Hz to 100.0 Hz	0.0	Hz	Changeable only at stop
AA-19	0xAA13	Angle compensation for speed tracking of synchronous motor	0 to 360	0	-	Changeable only at stop
AA-20	0xAA14	Parameter auto-tuning of synchronous motor upon startup	0 to 1	0	-	Changeable at any time
AA-21	0xAA15	Current motor angle	0 to 65535	0	-	Unchangea ble
AA-22	0xAA16	Forward torque limit 1	0.0 to 400.0	150.0	-	Changeable at any time
AA-23	0xAA17	Reverse torque limit 1	0.0 to 400.0	150.0	-	Changeable at any time
AA-24	0xAA18	Source of forward torque limit 2	0: 400% Others: F connector	0	-	Changeable at any time
AA-25	0xAA19	Source of reverse torque limit 2	0: –400% Others: F connector	0	-	Changeable at any time

Para.	Comm. Addr.	Name	Reference	De fault	Unit	Change
AA-26	0xAA1A	Ramp (FRG) selection bit0	0: 0 1: 1 2: Terminal function input 3: DI1 4: DI2 5: DI3 6: DI4 7: DI5 8: DI6 9: DI7 10: DI8 11: DI9 12: DI10 13: DI11 14: DI12 15: DI13 16: DI14 17: DI15 18: DI16 Others: B connector	0	-	Changeable at any time
AA-27	0xAA1B	Ramp (FRG) selection bit1	Same as A4-26	0	-	Changeable at any time
AA-30	0xAA1E	Motor protection	Bit00: Motor overload determination (reserved) Bit01: Motor overheat detection (reserved) Bit02: PG fault detection (reserved) Bit03: Current control error detection Bit04: Motor stall error detection Bit05: Locked-rotor detection Bit06: Synchronous motor demagnetization protection Bit07: Protection against locked-rotor in SVC speed open-loop control Bit08: Reserved Bit09: Parameter setting error	537	-	Changeable at any time
AA-31	0xAA1F	Locked-rotor time	0.0s to 65.0s	2.0	s	Changeable at any time
AA-32	0xAA20	Locked-rotor frequency	0.0% to 600.0%	6.0	%	Changeable at any time
AA-33	0xAA21	Motor stall detection time	0.0s to 10.0s	0.5	s	Changeable at any time
AA-34	0xAA22	Stall detection threshold	0.0% to +100.0%	30.0	%	Changeable at any time
AA-35	0xAA23	Current control exception detection time	0.00s to 1.00s	0.05	s	Changeable at any time

Para.	Comm. Addr.	Name	Reference	De fault	Unit	Change
AA-36	0xAA24	Current control exception detection threshold	0.0% to 200.0%	25.0	%	Changeable at any time
AA-37	0xAA25	Synchronous motor overcurrent threshold	0.0% to 500.0%	300.0	%	Changeable at any time
AA-39	0xAA27	Speed deviation detection	0 to 1	1	-	Changeable at any time
AA-40	0xAA28	Asynchronous motor FVC model switchover frequency	0% to 1000%	20	%	Changeable only at stop
AA-41	0xAA29	Asynchronous motor FVC model switchover hysteresis frequency	10% to 50%	20	%	Changeable only at stop
AA-42	0xAA2A	Asynchronous motor FVC observer filter time	5 ms to 100 ms	15	ms	Changeable only at stop
AA-43	0xAA2B	Asynchronous motor FVC current model mode	0 to 1	0	-	Changeable only at stop
AA-44	0xAA2C	Asynchronous motor FVC pre-excitation output observation angle mode	0 to 1	0	-	Changeable only at stop
AA-45	0xAA2D	Asynchronous motor SVC model switchover frequency	10% to 20%	15	%	Changeable only at stop
AA-46	0xAA2E	Asynchronous motor SVC observer filter time	5 ms to 50 ms	10	ms	Changeable at any time
AA-47	0xAA2F	Asynchronous motor SVC observer gain 1	10% to 500%	100	%	Changeable at any time
AA-48	0xAA30	Asynchronous motor SVC observer gain 2	10% to 100%	20	%	Changeable at any time
AA-49	0xAA31	Asynchronous motor SVC observer mode	0 to 3	0	-	Changeable only at stop
AA-50	0xAA32	Asynchronous motor SVC pre-excitation mode	0 to 1	0	-	Changeable only at stop

Para.	Comm. Addr.	Name	Reference	De fault	Unit	Change
AA-51	0xAA33	Asynchronous motor SVC speed tracking mode	0 to 1	0	-	Changeable only at stop
AA-54	0xAA36	Synchronous motor 1 model control	Bit00: Low speed processing Bit01: Low speed processing 1 Bit02: Online auto-tuning of resistance Bit03: Online auto-tuning of back EMF Bit04: KS	5	-	Changeable at any time
AA-55	0xAA37	Synchronous motor model K1	10 to 3000	200	-	Changeable at any time
AA-56	0xAA38	Synchronous motor model K1Max	100 to 6000	3000	-	Changeable at any time
AA-57	0xAA39	Synchronous motor model KsMin	0.0 to 4.0	0.3	-	Changeable at any time
AA-58	0xAA3A	Synchronous motor model Kspeed	50 to 2000	400	-	Changeable at any time
AA-59	0xAA3B	Synchronous motor frequency filter time constant	2 ms to 100 ms	10	ms	Changeable at any time
AA-60	0xAA3C	Frequency upper limit of synchronous motor Rs online auto-tuning	1.0% to 20.0%	3.5	%	Changeable at any time
AA-61	0xAA3D	Synchronous motor model Kr	0 to 50	10	-	Changeable at any time
AA-62	0xAA3E	Synchronous motor model Kr1	0 to 50	5	-	Changeable at any time
AA-63	0xAA3F	Synchronous motor low-speed D axis injection current	0% to 100%	20	%	Changeable at any time
AA-64	0xAA40	Synchronous motor model LowFreqTime1	0 to 500	50	-	Changeable at any time
AA-67	0xAA43	Frequency lower limit of back EMF online auto-tuning	10% to 100%	25	%	Changeable at any time
AA-68	0xAA44	Synchronous motor model LowFreq	0.0% to 2.0%	0.3	%	Changeable at any time
AA-69	0xAA45	Synchronous motor model LowFreqTime	0 to 100	10	-	Changeable at any time
AA-70	0xAA46	Percentage of pole auto-tuning current	50% to 200%	100	%	Changeable at any time

Para.	Comm. Addr.	Name	Reference	De fault	Unit	Change
AA-71	0xAA47	Percentage of high frequency response current	0% to 100%	25	%	Changeable at any time
AA-72	0xAA48	Percentage of HFI and SVC switching frequency	0% to 30%	10	%	Changeable at any time
AA-73	0xAA49	Observer parameter	10 to 200	100	-	Changeable at any time
AA-74	0xAA4A	Speed filter cut-off frequency	1 Hz to 200 Hz	10	Hz	Changeable at any time
AA-75	0xAA4B	Carrier frequency during NS auto-tuning	2.00 Hz to 16.00 Hz	8.00	Hz	Changeable at any time
AA-76	0xAA4C	Automatic calculation of NS auto-tuning voltage	0 to 1	1	-	Changeable at any time
AA-77	0xAA4D	Percentage of NS auto-tuning voltage set manually	0% to 100%	10	%	Changeable at any time
AA-78	0xAA4E	Duration of HFI stage 1	50 ms to 500 ms	150	ms	Changeable at any time
AA-80	0xAA50	Speed loop command word	Bit00: Speed loop 0: Disabled 1: Enabled Bit01: Integration mode 0: Conventional integration 1: Position integration Bit02: Acceleration torque 0: Disabled 1: Enabled Bit03–Bit04: Acceleration source 0: Function transfer torque 1: Automatic calculation 2: Function transfer acceleration Bit05: Anti-load disturbance 0: Disabled 1: Enabled	11	-	Changeable at any time
AA-81	0xAA51	Locked-rotor fast integral cancel coefficient	0.0% to +100.0%	0.0	%	Changeable at any time
AA-82	0xAA52	Integral torque	–100% to +100.0%	0.0	%	Changeable at any time
AA-83	0xAA53	Speed controller frequency window size	0.00 Hz to 10.00 Hz	0.00	Hz	Changeable only at stop

Para.	Comm. Addr.	Name	Reference	De fault	Unit	Change
AA-84	0xAA54	Current filter time for torque reference	0.0 ms to 100.0 ms	0.0	ms	Changeable only at stop
AA-85	0xAA55	Acceleration torque	0: Inactive 1: AI1 2: AI2 3: AI3 4: Pulse reference 5: Communication 6: Multi-reference 7: Motor-driven potentiometer 8: PID Others: F connector	0	-	Changeable at any time
AA-87	0xAA57	Reference model bandwidth	0.00 Hz to 300.00 Hz	0.00	Hz	Changeable at any time
AA-88	0xAA58	Torque feedforward coefficient	0.0% to 1000.0%	100.0	%	Changeable at any time
AA-89	0xAA59	Vector control reference frequency filter time	0.0 ms to 100.0 ms	0.0	ms	Changeable only at stop
AA-90	0xAA5A	Vector control feedback frequency filter time	0.0 ms to 100.0 ms	0.0	ms	Changeable only at stop
AA-91	0xAA5B	Load observation bandwidth	0.00 Hz to 300.00 Hz	0.00	Hz	Changeable at any time
AA-92	0xAA5C	Load observation coefficient	0.0% to 1000.0%	100.0	%	Changeable at any time
AA-93	0xAA5D	Pseudo integral coefficient	0.000 to 10.000	1.000	-	Changeable at any time
AA-94	0xAA5E	Torque coefficient enable	0: Disabled 1: Enabled	0	-	Changeable at any time
AA-96	0xAA60	Center frequency of notch filter 1	0.0 to 4000.0	4000.0	-	Changeable at any time
AA-97	0xAA61	Center frequency of notch filter 2	0.0 to 4000.0	4000.0	-	Changeable at any time
AA-98	0xAA62	Integral setting control word	0: Disabled 1: Enabled Others: B connector	0	-	Changeable at any time

Para.	Comm. Addr.	Name	Reference	De fault	Unit	Change
AA-99	0xAA63	Integral reference source	0: Digital setting 1: AI1 2: AI2 3: AI3 4: Pulse reference 5: Communication 6: Multi-reference 7: Motor-driven potentiometer 8: PID Others: F connector	0	-	Changeable at any time
AB-00	0xAB00	Externally transferred acceleration	0: Inactive 1: AI1 2: AI2 3: AI3 4: Pulse reference 5: Communication 6: Multi-reference 7: Motor-driven potentiometer 8: PID Others: F connector	0	-	Changeable at any time
AB-03	0xAB03	Overturning torque limiting coefficient	0.0% to 400.0%	100.0	%	Changeable at any time
AB-04	0xAB04	Motoring power limiting coefficient	0.0% to 400.0%	400.0	%	Changeable at any time
AB-05	0xAB05	Generating power limiting coefficient	0.0% to 400.0%	400.0	%	Changeable at any time
AB-06	0xAB06	Overspeed limiting enable	0 to 1	1	-	Changeable at any time
AB-07	0xAB07	Sine wave frequency of bandwidth test	0 Hz to 1000 Hz	0	Hz	Changeable at any time
AB-08	0xAB08	Sine wave amplitude of bandwidth test	0% to 100%	0	%	Changeable at any time
AB-09	0xAB09	Bandwidth test enable	0 to 4	0	-	Changeable at any time
AB-11	0xAB0B	Speed loop parameter calculation mode	0: New solution 1: Compatible solution	1	-	Changeable only at stop
AB-12	0xAB0C	Speed loop proportional gain in FVC mode	0.00 Hz to 100.00 Hz	8.00	Hz	Changeable at any time
AB-13	0xAB0D	Speed loop integral time in FVC mode	0.000s to 20.000s	0.080	s	Changeable at any time
AB-14	0xAB0E	Speed loop proportional gain in SVC mode	0.00 Hz to 100.00 Hz	5.00	Hz	Changeable at any time

Para.	Comm. Addr.	Name	Reference	De fault	Unit	Change
AB-15	0xAB0F	Speed loop integral time in SVC mode	0.000s to 20.000s	0.127	s	Changeable at any time
AB-16	0xAB10	Low frequency proportional correction coefficient	0.0% to 1000.0%	100.0	%	Changeable at any time
AB-17	0xAB11	Low frequency integral correction coefficient	0.0% to 1000.0%	100.0	%	Changeable at any time
AB-18	0xAB12	Speed loop adaption factor	0.000 to 10.000	0.200	-	Changeable at any time
AB-19	0xAB13	Speed loop adaption switchover lower limit	0.000 to 10.000	0.400	-	Changeable at any time
AB-20	0xAB14	Speed loop adaption switchover upper limit	0.000 to 10.000	1.000	-	Changeable at any time
AB-21	0xAB15	Speed loop adaption correction upper limit	0.0% to 1000.0%	100.0	%	Changeable at any time
AB-22	0xAB16	Speed loop adaption correction lower limit	0.0% to 1000.0%	100.0	%	Changeable at any time
AB-23	0xAB17	Flux adaptation enable	0 to 1	0	-	Changeable at any time
AB-24	0xAB18	Overspeed controller correction coefficient	0.0% to 1000.0%	100.0	%	Changeable at any time
AB-25	0xAB19	VDC control command word	Bit00: VdcMin 0: Disabled 1: Enabled Bit01: VdcMax 0: Disabled 1: Enabled Bit02: Automatic calculation of VDC trigger voltage 0: Disabled 1: Enabled Bit03: VDC control integral action 0: Disabled 1: Enabled	0	-	Changeable at any time
AB-26	0xAB1A	Bus capacitance ratio	50.0% to 1000.0%	100.0	%	Changeable at any time

Para.	Comm. Addr.	Name	Reference	De fault	Unit	Change
AB-27	0xAB1B	Undervoltage suppression exit hysteresis frequency	0.00 Hz to 10.00 Hz	3.00	Hz	Changeable at any time
AB-28	0xAB1C	Minimum VDC failure speed threshold	0.00 Hz to 20.00 Hz	2.00	Hz	Changeable at any time
AB-29	0xAB1D	Dynamic adjustment coefficient	0.0% to 1000.0%	100.0	%	Changeable at any time
AB-30	0xAB1E	Minimum VDC activation voltage	320.0 V to 540.0 V	430.0	V	Changeable at any time
AB-31	0xAB1F	Maximum VDC activation voltage	650.0 V to 800.0 V	770.0	V	Changeable at any time

Para.	Comm. Addr.	Name	Reference	De fault	Unit	Change
AB-32	0xAB20	Flux linkage control command word	Bit00: Output voltage limit calculation filtering mode 0: Symmetric filtering 1: Asymmetric filtering Bit01: Asynchronous motor inverse proportion curve calculation 0: The inverse proportional synchronization frequency decreases. 1: The inverse proportional speed decreases. Bit02: Flux linkage feedforward calculation by using inverse proportional speed 0: Disabled 1: Enabled Bit03: Reserved Bit04: Reserved Bit05: Field weakening adjustment 0: Disabled 1: Enabled Bit06: Flux linkage derivative feedforward 0: Disabled 1: Enabled Bit07: Energy conservation control 0: Disabled 1: Enabled Bit08: Asynchronous motor flux closed loop 0: Disabled 1: Enabled Bit09: Reserved Bit10: Reserved Bit11: Asynchronous motor pre-excitation mode 0: Pre-excitation based on time 1: Pre-excitation based on current Bit12: Asynchronous motor pre-excitation current 0: Reference current 1: Maximum current allowed by the drive	2357	-	Changeable at any time
AB-33	0xAB21	Output voltage upper limit margin for field weakening adjustment	1% to 50%	5	%	Changeable at any time
AB-34	0xAB22	Output voltage upper limit margin for auto adjustment of field weakening	1% to 20%	3	%	Changeable at any time
AB-35	0xAB23	Filter time for calculating maximum output voltage	0 ms to 3000 ms	30	ms	Changeable at any time

Para.	Comm. Addr.	Name	Reference	De fault	Unit	Change
AB-36	0xAB24	Rated flux adjustment coefficient for calculation	0.5 to 2.0	1.0	-	Changeable at any time
AB-37	0xAB25	Field weakening frequency adjustment coefficient for calculation	0.8 to 1.2	1.0	-	Changeable at any time
AB-38	0xAB26	Slip filter time for calculating field weakening frequency	0 ms to 3000 ms	62	ms	Changeable at any time
AB-39	0xAB27	Feedback speed filtering	0 ms to 8000 ms	50	ms	Changeable at any time
AB-40	0xAB28	Flux linkage rising filter time	0 ms to 8000 ms	20	ms	Changeable at any time
AB-42	0xAB2A	Feedback voltage filter time	0 ms to 3000 ms	5	ms	Changeable at any time
AB-43	0xAB2B	Maximum demagnetization current of synchronous motor	0% to 500%	300	%	Changeable at any time
AB-44	0xAB2C	Voltage outer loop lower limit coefficient	0 to 500	50	-	Changeable at any time
AB-45	0xAB2D	Flux linkage derivative feedforward coefficient	0.0 to 1.5	1.0	-	Changeable at any time
AB-46	0xAB2E	Flux linkage derivative feedforward filter time	0 ms to 3000 ms	6	ms	Changeable at any time
AB-47	0xAB2F	Torque current rising filter time under energy conservation control	0 ms to 3000 ms	50	ms	Changeable at any time
AB-48	0xAB30	Torque current falling filter time under energy conservation control	0 ms to 3000 ms	100	ms	Changeable at any time

Para.	Comm. Addr.	Name	Reference	De fault	Unit	Change
AB-49	0xAB31	Flux linkage lower limit coefficient under energy conservation control	0.00 to 0.50	0.10	-	Changeable at any time
AB-51	0xAB33	Pre-excitation current	1% to 200%	100	%	Changeable at any time
AB-52	0xAB34	Pre-excitation time	1 ms to 30000 ms	1000	ms	Changeable at any time
AB-53	0xAB35	Flux linkage closed-loop bandwidth frequency	0.0 Hz to 100.0 Hz	2.0	Hz	Changeable at any time
AB-54	0xAB36	Feedback flux linkage filter time coefficient	0 to 200	4	-	Changeable at any time
AB-55	0xAB37	Static output flux linkage filter time	0 ms to 5000 ms	10	ms	Changeable at any time
AB-56	0xAB38	Current loop mode	0: ImCsr2 mode 1: Complex vector mode 2: 880 mode 3: No field weakening	1	-	Changeable only at stop
AB-57	0xAB39	PI regulator proportional gain adaptation with load	0: Disabled 1: Enabled	0	-	Changeable only at stop
AB-58	0xAB3A	Current loop damping	0.2 to 5.0	0.8	-	Changeable at any time
AB-59	0xAB3B	Low-speed current loop Kp adjustment	0.1 to 10.0	1.0	-	Changeable at any time
AB-60	0xAB3C	High-speed current loop Kp adjustment	0.1 to 10.0	1.0	-	Changeable at any time
AB-61	0xAB3D	Low-speed current loop Ki adjustment	0.1 to 10.0	1.0	-	Changeable at any time
AB-62	0xAB3E	High-speed current loop Ki adjustment	0.1 to 10.0	2.0	-	Changeable at any time
AB-63	0xAB3F	D-axis current loop complex vector adjustment	0.1 to 10.0	1.0	-	Changeable at any time
AB-64	0xAB40	Q-axis current loop complex vector adjustment	0.1 to 10.0	1.0	-	Changeable at any time

Para.	Comm. Addr.	Name	Reference	De fault	Unit	Change
AB-65	0xAB41	Complex vector hysteresis frequency lower limit as a percentage of rated frequency	0% to AB-66	0	%	Changeable at any time
AB-66	0xAB42	Complex vector hysteresis frequency upper limit as a percentage of rated frequency	AB-65 to 150%	0	%	Changeable at any time
AB-67	0xAB43	ImCsr2 hysteresis switchover voltage upper limit as a percentage of saturation voltage	AB-68 to 95%	89	%	Changeable at any time
AB-68	0xAB44	ImCsr2 hysteresis switchover voltage lower limit as a percentage of saturation voltage	60% to AB-67	79	%	Changeable at any time
AB-69	0xAB45	ImCsr2 hysteresis switchover frequency hysteresis range as a percentage of rated frequency	1% to 30%	10	%	Changeable at any time
AB-70	0xAB46	ImCsr2 hysteresis switchover frequency lower limit (below which the hysteresis condition does not take effect) as a percentage of the rated frequency	40% to 80%	60	%	Changeable at any time
AB-71	0xAB47	ImCsr2 current loop Kss adjustment	0.1 to 10.0	1.0	-	Changeable at any time
AB-72	0xAB48	Proportional gain adjustment coefficient corresponding to the maximum torque when proportional gain is adjusted with load	0.1 to 1.0	0.5	-	Changeable at any time

Para.	Comm. Addr.	Name	Reference	De fault	Unit	Change
AB-73	0xAB49	Torque upper limit setpoint as a percentage of rated torque when proportional gain is adjusted with load	AB-74 to 300%	200	%	Changeable at any time
AB-74	0xAB4A	Torque lower limit setpoint as a percentage of rated torque when proportional gain is adjusted with load	10% to AB-73	100	%	Changeable at any time
AB-75	0xAB4B	Derivative feedforward adjustment	0.0 to 1.0	0.0	-	Changeable at any time
AB-76	0xAB4C	Decoupling control start frequency as a percentage of rated frequency	20% to 150%	40	%	Changeable at any time
AB-77	0xAB4D	Decoupling control filter time adjustment coefficient	0.1 to 3.0	1.0	-	Changeable at any time
AB-78	0xAB4E	Decoupling control output adjustment coefficient	0.0 to 1.0	1.0	-	Changeable at any time
AB-79	0xAB4F	CPC feedforward enable	0: Disabled 1: Enabled	0	-	Changeable at any time
AB-80	0xAB50	Current loop auxiliary command word	Bit00: Complex vector angle limiting 0: Disabled 1: Enabled Bit01: Voltage angle limiting 0: Program internal limiting 1: Parameter setting Bit02: 0 by default 0: No lower limit on the excitation current is imposed during the dynamic process. 1: A lower limit on the excitation current is imposed during the dynamic process in ImCsr2 mode. Bit03–Bit15: Reserved (0 by default)	0	-	Changeable at any time
AB-81	0xAB51	Voltage angle upper limit	90° to 180°	150	°	Changeable at any time
AB-82	0xAB52	Voltage angle lower limit	0° to 90°	30	°	Changeable at any time

Para.	Comm. Addr.	Name	Reference	De fault	Unit	Change
AB-83	0xAB53	Asynchronous motor D axis integral limit	0.500 to 1.000	0.707	-	Changeable at any time
AB-84	0xAB54	Current loop carrier frequency upper limit	5.0 to 16.0	8.0	-	Changeable at any time
AB-85	0xAB55	Droop enable	0 to 1	0	-	Changeable only at stop
AB-86	0xAB56	Droop source	0: Line current 1: Torque reference 2: Speed adjustment output 3: Speed adjustment integral component	1	-	Changeable only at stop
AB-87	0xAB57	Frequency reference droop coefficient	0.0% to 50.0%	0.0	%	Changeable at any time
AB-88	0xAB58	FVC-SVC switchover mode	0: No switchover 1: Active switchover 2: Passive switchover (The AC drive switches to SVC mode upon detection of encoder wire breakage, and it switches back to FVC mode when the encoder recovers during stop and does not switch back to FVC mode when the encoder recovers during running.) 3: Passive switchover (The AC drive switches to SVC mode upon detection of encoder wire breakage, and it switches back to FVC mode when the encoder recovers during running or stop.)	0	-	Changeable only at stop
AB-89	0xAB59	FVC-SVC switchover frequency	10% to 500%	50	%	Changeable only at stop
AB-90	0xAB5A	FVC-SVC switchover hysteresis	10% to 100%	10	%	Changeable only at stop
AC-00	0xAC00	AI1 measured voltage 1	–10 V to +10.000 V	2.000	V	Changeable only at stop
AC-01	0xAC01	AI1 displayed voltage 1	–10 V to +10.000 V	2.000	V	Changeable only at stop
AC-02	0xAC02	AI1 measured voltage 2	–10 V to +10.000 V	8.000	V	Changeable only at stop
AC-03	0xAC03	AI1 displayed voltage 2	–10 V to +10.000 V	8.000	V	Changeable only at stop
AC-04	0xAC04	AI2 measured voltage 1	–10 V to +10.000 V	2.000	V	Changeable only at stop
AC-05	0xAC05	AI2 displayed voltage 1	–10 V to +10.000 V	2.000	V	Changeable only at stop
AC-06	0xAC06	AI2 measured voltage 2	–10 V to +10.000 V	8.000	V	Changeable only at stop

Para.	Comm. Addr.	Name	Reference	De fault	Unit	Change
AC-07	0xAC07	AI2 displayed voltage 2	–10 V to +10.000 V	8.000	V	Changeable only at stop
AC-08	0xAC08	AI3 measured voltage 1	–10 V to +10.000 V	2.000	V	Changeable only at stop
AC-09	0xAC09	AI3 displayed voltage 1	–10 V to +10.000 V	2.000	V	Changeable only at stop
AC-10	0xAC0A	AI3 measured voltage 2	–10 V to +10.000 V	8.000	V	Changeable only at stop
AC-11	0xAC0B	AI3 displayed voltage 2	–10 V to +10.000 V	8.000	V	Changeable only at stop
AC-12	0xAC0C	AO1 target voltage 1	–10 V to +10.000 V	2.000	V	Changeable only at stop
AC-13	0xAC0D	AO1 measured voltage 1	–10 V to +10.000 V	2.000	V	Changeable only at stop
AC-14	0xAC0E	AO1 target voltage 2	–10 V to +10.000 V	8.000	V	Changeable only at stop
AC-15	0xAC0F	AO1 measured voltage 2	–10 V to +10.000 V	8.000	V	Changeable only at stop
AC-16	0xAC10	AO2 target voltage 1	–10 V to +10.000 V	2.000	V	Changeable only at stop
AC-17	0xAC11	AO2 measured voltage 1	–10 V to +10.000 V	2.000	V	Changeable only at stop
AC-18	0xAC12	AO2 target voltage 2	–10 V to +10.000 V	8.000	V	Changeable only at stop
AC-19	0xAC13	AO2 measured voltage 2	–10 V to +10.000 V	8.000	V	Changeable only at stop
AF-00	0xAF00	RPDO1-SubIndex0-H	0x0 to 0xFFFF	0x0	-	Changeable at any time
AF-01	0xAF01	RPDO1-SubIndex0-L	0x0 to 0xFFFF	0x0	-	Changeable at any time
AF-02	0xAF02	RPDO1-SubIndex1-H	0x0 to 0xFFFF	0x0	-	Changeable at any time
AF-03	0xAF03	RPDO1-SubIndex1-L	0x0 to 0xFFFF	0x0	-	Changeable at any time
AF-04	0xAF04	RPDO1-SubIndex2-H	0x0 to 0xFFFF	0x0	-	Changeable at any time
AF-05	0xAF05	RPDO1-SubIndex2-L	0x0 to 0xFFFF	0x0	-	Changeable at any time
AF-06	0xAF06	RPDO1-SubIndex3-H	0x0 to 0xFFFF	0x0	-	Changeable at any time
AF-07	0xAF07	RPDO1-SubIndex3-L	0x0 to 0xFFFF	0x0	-	Changeable at any time
AF-08	0xAF08	RPDO2-SubIndex0-H	0x0 to 0xFFFF	0x0	-	Changeable at any time

Para.	Comm. Addr.	Name	Reference	De fault	Unit	Change
AF-09	0xAF09	RPDO2-SubIndex0-L	0x0 to 0xFFFF	0x0	-	Changeable at any time
AF-10	0xAF0A	RPDO2-SubIndex1-H	0x0 to 0xFFFF	0x0	-	Changeable at any time
AF-11	0xAF0B	RPDO2-SubIndex1-L	0x0 to 0xFFFF	0x0	-	Changeable at any time
AF-12	0xAF0C	RPDO2-SubIndex2-H	0x0 to 0xFFFF	0x0	-	Changeable at any time
AF-13	0xAF0D	RPDO2-SubIndex2-L	0x0 to 0xFFFF	0x0	-	Changeable at any time
AF-14	0xAF0E	RPDO2-SubIndex3-H	0x0 to 0xFFFF	0x0	-	Changeable at any time
AF-15	0xAF0F	RPDO2-SubIndex3-L	0x0 to 0xFFFF	0x0	-	Changeable at any time
AF-16	0xAF10	RPDO3-SubIndex0-H	0x0 to 0xFFFF	0x0	-	Changeable at any time
AF-17	0xAF11	RPDO3-SubIndex0-L	0x0 to 0xFFFF	0x0	-	Changeable at any time
AF-18	0xAF12	RPDO3-SubIndex1-H	0x0 to 0xFFFF	0x0	-	Changeable at any time
AF-19	0xAF13	RPDO3-SubIndex1-L	0x0 to 0xFFFF	0x0	-	Changeable at any time
AF-20	0xAF14	RPDO3-SubIndex2-H	0x0 to 0xFFFF	0x0	-	Changeable at any time
AF-21	0xAF15	RPDO3-SubIndex2-L	0x0 to 0xFFFF	0x0	-	Changeable at any time
AF-22	0xAF16	RPDO3-SubIndex3-H	0x0 to 0xFFFF	0x0	-	Changeable at any time
AF-23	0xAF17	RPDO3-SubIndex3-L	0x0 to 0xFFFF	0x0	-	Changeable at any time
AF-24	0xAF18	RPDO4-SubIndex0-H	0x0 to 0xFFFF	0x0	-	Changeable at any time
AF-25	0xAF19	RPDO4-SubIndex0-L	0x0 to 0xFFFF	0x0	-	Changeable at any time
AF-26	0xAF1A	RPDO4-SubIndex1-H	0x0 to 0xFFFF	0x0	-	Changeable at any time
AF-27	0xAF1B	RPDO4-SubIndex1-L	0x0 to 0xFFFF	0x0	-	Changeable at any time
AF-28	0xAF1C	RPDO4-SubIndex2-H	0x0 to 0xFFFF	0x0	-	Changeable at any time
AF-29	0xAF1D	RPDO4-SubIndex2-L	0x0 to 0xFFFF	0x0	-	Changeable at any time
AF-30	0xAF1E	RPDO4-SubIndex3-H	0x0 to 0xFFFF	0x0	-	Changeable at any time

Para.	Comm. Addr.	Name	Reference	De fault	Unit	Change
AF-31	0xAF1F	RPDO4-SubIndex3-L	0x0 to 0xFFFF	0x0	-	Changeable at any time
AF-32	0xAF20	TPDO1-SubIndexO-H	0x0 to 0xFFFF	0x0	-	Changeable at any time
AF-33	0xAF21	TPDO1-SubIndexO-L	0x0 to 0xFFFF	0x0	-	Changeable at any time
AF-34	0xAF22	TPDO1-SubIndex1-H	0x0 to 0xFFFF	0x0	-	Changeable at any time
AF-35	0xAF23	TPDO1-SubIndex1-L	0x0 to 0xFFFF	0x0	-	Changeable at any time
AF-36	0xAF24	TPDO1-SubIndex2-H	0x0 to 0xFFFF	0x0	-	Changeable at any time
AF-37	0xAF25	TPDO1-SubIndex2-L	0x0 to 0xFFFF	0x0	-	Changeable at any time
AF-38	0xAF26	TPDO1-SubIndex3-H	0x0 to 0xFFFF	0x0	-	Changeable at any time
AF-39	0xAF27	TPDO1-SubIndex3-L	0x0 to 0xFFFF	0x0	-	Changeable at any time
AF-40	0xAF28	TPDO2-SubIndex0-H	0x0 to 0xFFFF	0x0	-	Changeable at any time
AF-41	0xAF29	TPDO2-SubIndex0-L	0x0 to 0xFFFF	0x0	-	Changeable at any time
AF-42	0xAF2A	TPDO2-SubIndex1-H	0x0 to 0xFFFF	0x0	-	Changeable at any time
AF-43	0xAF2B	TPDO2-SubIndex1-L	0x0 to 0xFFFF	0x0	-	Changeable at any time
AF-44	0xAF2C	TPDO2-SubIndex2-H	0x0 to 0xFFFF	0x0	-	Changeable at any time
AF-45	0xAF2D	TPDO2-SubIndex2-L	0x0 to 0xFFFF	0x0	-	Changeable at any time
AF-46	0xAF2E	TPDO2-SubIndex3-H	0x0 to 0xFFFF	0x0	-	Changeable at any time
AF-47	0xAF2F	TPDO2-SubIndex3-L	0x0 to 0xFFFF	0x0	-	Changeable at any time
AF-48	0xAF30	TPDO3-SubIndex0-H	0x0 to 0xFFFF	0x0	-	Changeable at any time
AF-49	0xAF31	TPDO3-SubIndex0-L	0x0 to 0xFFFF	0x0	-	Changeable at any time
AF-50	0xAF32	TPDO3-SubIndex1-H	0x0 to 0xFFFF	0x0	-	Changeable at any time
AF-51	0xAF33	TPDO3-SubIndex1-L	0x0 to 0xFFFF	0x0	-	Changeable at any time
AF-52	0xAF34	TPDO3-SubIndex2-H	0x0 to 0xFFFF	0x0	-	Changeable at any time

Para.	Comm. Addr.	Name	Reference	De fault	Unit	Change
AF-53	0xAF35	TPDO3-SubIndex2-L	0x0 to 0xFFFF	0x0	-	Changeable at any time
AF-54	0xAF36	TPDO3-SubIndex3-H	0x0 to 0xFFFF	0x0	-	Changeable at any time
AF-55	0xAF37	TPDO3-SubIndex3-L	0x0 to 0xFFFF	0x0	-	Changeable at any time
AF-56	0xAF38	TPDO4-SubIndex0-H	0x0 to 0xFFFF	0x0	-	Changeable at any time
AF-57	0xAF39	TPDO4-SubIndex0-L	0x0 to 0xFFFF	0x0	-	Changeable at any time
AF-58	0xAF3A	TPDO4-SubIndex1-H	0x0 to 0xFFFF	0x0	-	Changeable at any time
AF-59	0xAF3B	TPDO4-SubIndex1-L	0x0 to 0xFFFF	0x0	-	Changeable at any time
AF-60	0xAF3C	TPDO4-SubIndex2-H	0x0 to 0xFFFF	0x0	-	Changeable at any time
AF-61	0xAF3D	TPDO4-SubIndex2-L	0x0 to 0xFFFF	0x0	-	Changeable at any time
AF-62	0xAF3E	TPDO4-SubIndex3-H	0x0 to 0xFFFF	0x0	-	Changeable at any time
AF-63	0xAF3F	TPDO4-SubIndex3-L	0x0 to 0xFFFF	0x0	-	Changeable at any time
AF-66	0xAF42	Number of valid RPDOs	0x0 to 0xFFFF	0x0	-	Unchangeable
AF-67	0xAF43	Number of valid TPDOs	0x0 to 0xFFFF	0x0	-	Unchangeable
B6-00	0xB600	Startup mode	0: Direct start 1: Flying start 2: Pre-excitation start (AC asynchronous motor) 3: SVC quick start	0	-	Changeable at any time
B6-01	0xB601	Speed tracking mode	0: From the stop frequency 1: From the power frequency 2: From the maximum frequency 3: Reserved 4: Magnetic field directional speed tracking (MD290)	0	-	Changeable at any time
B6-02	0xB602	Speed of speed tracking	1 to 100	20	-	Changeable at any time
B6-03	0xB603	Startup frequency	0.00 Hz to 10.00 Hz	0.00	Hz	Changeable at any time
B6-04	0xB604	Startup frequency hold time	0.0s to 100.0s	0.0	s	Changeable only at stop
B6-05	0xB605	DC braking current at startup	0% to 100%	50	%	Changeable only at stop

Para.	Comm. Addr.	Name	Reference	De fault	Unit	Change
B6-06	0xB606	DC braking time at startup	0.0s to 100.0s	0.0	s	Changeable only at stop
B6-07	0xB607	Stop mode	0: Decelerate to stop 1: Coast to stop 2: Stop at maximum capability	0	-	Changeable at any time
B6-08	0xB608	Start frequency of DC braking at stop	0.00 Hz to F0-10	0.00	Hz	Changeable at any time
B6-09	0xB609	DC braking delay at stop	0.0s to 100.0s	0.0	s	Changeable at any time
B6-10	0xB60A	DC braking current at stop	0% to 100%	50	%	Changeable at any time
B6-11	0xB60B	DC braking time at stop	0.0s to 100.0s	0.0	s	Changeable at any time
B6-12	0xB60C	Speed tracking sweep current limit closed loop Kp	0 to 1000	500	-	Changeable at any time
B6-13	0xB60D	Speed tracking sweep current limit closed loop Ki	0 to 1000	800	-	Changeable at any time
B6-14	0xB60E	Speed tracking current	30% to 200%	80	%	Changeable only at stop
B6-15	0xB60F	Current loop multiple	10% to 600%	100	%	Changeable at any time
B6-16	0xB610	Demagnetization time (valid for asynchronous motors)	0.00s to 5.00s	0.50	s	Changeable at any time
B6-17	0xB611	Overexcitation enable	0: Disabled 2: Enabled during deceleration 3: Enabled always	0	-	Changeable at any time
B6-18	0xB612	Overexcitation suppression current	0% to 150%	100	%	Changeable at any time
B6-19	0xB613	Overexcitation gain	0.01 to 2.50	1.25	-	Changeable at any time
B6-25	0xB619	Skip frequency 1	0.00 Hz to F0-10	0.00	Hz	Changeable at any time
B6-26	0xB61A	Skip frequency 2	0.00 Hz to F0-10	0.00	Hz	Changeable at any time
B6-27	0xB61B	Skip frequency 3	0.00 Hz to F0-10	0.00	Hz	Changeable at any time
B6-28	0xB61C	Skip frequency 4	0.00 Hz to F0-10	0.00	Hz	Changeable at any time
B6-29	0xB61D	Skip frequency band	0.00 Hz to F0-10	0.00	Hz	Changeable at any time

Para.	Comm. Addr.	Name	Reference	De fault	Unit	Change
B6-30	0xB61E	Source of frequency upper limit	0: F0-12 1: AI1 2: AI2 3: AI3 4: Pulse reference 5: Communication Others: F connector	0	-	Changeable only at stop
B6-31	0xB61F	Frequency upper limit	B6-33 to F0-10	50.00	Hz	Changeable at any time
B6-32	0xB620	Frequency upper limit offset	0.00 Hz to F0-10 (maximum frequency)	0.00	Hz	Changeable at any time
B6-33	0xB621	Frequency lower limit	0.00 Hz to B6-31	0.00	Hz	Changeable at any time
B6-34	0xB622	Speed/Torque control mode	0: Speed control 1: Torque control	0	-	Changeable at any time
B6-35	0xB623	Motor overload protection	0: Disabled 1: Enabled	1	-	Changeable at any time
B6-36	0xB624	Motor overload protection gain	0.20 to 10.00	1.00	-	Changeable at any time
B6-37	0xB625	Motor overload pre-warning coefficient	50% to 100%	80	%	Changeable at any time
B6-38	0xB626	Overvoltage stall suppression gain	1 to 100	30	-	Changeable at any time
B6-39	0xB627	Overvoltage stall protection voltage	330.0 V to 800.0 V	770.0	V	Changeable at any time
B6-40	0xB628	Input phase loss/ Contactor pickup protection	Ones: Input phase loss protection 0: Disabled 1: Protection enabled when both software and hardware input phase loss conditions are met 2: Protection enabled when software input phase loss conditions are met 3: Protection enabled when hardware input phase loss conditions are met Tens: Contactor pickup protection 0: Disabled 1: Enabled	11	-	Changeable at any time
B6-41	0xB629	Output phase loss protection	Ones: Output phase loss protection upon power-on 0: Disabled 1: Enabled Tens: Output phase loss protection before running 0: Disabled 1: Enabled	1	-	Changeable at any time

Para.	Comm. Addr.	Name	Reference	De fault	Unit	Change
B6-42	0xB62A	Power dip ride-through	0: Disabled 1: Decelerate 2: Decelerate to stop 3: Suppress voltage dip	0	-	Changeable only at stop
B6-43	0xB62B	Voltage threshold for disabling power dip ride-through	80% to 100%	85	%	Changeable only at stop
B6-44	0xB62C	Delay of voltage recovery from power dip	0.0s to 100.0s	0.5	s	Changeable only at stop
B6-45	0xB62D	Voltage threshold for enabling power dip ride-through	60% to 100%	80	%	Changeable only at stop
B6-46	0xB62E	Protection upon load loss	0: Disabled 1: Enabled	0	-	Changeable at any time
B6-47	0xB62F	Load loss detection level	0.0% to +100.0%	10.0	%	Changeable at any time
B6-48	0xB630	Load loss detection time	0.0s to 60.0s	1.0	s	Changeable at any time
B6-49	0xB631	Overspeed detection level	0.0% to 50.0%	20.0	%	Changeable at any time
B6-50	0xB632	Overspeed detection time	0.0s to 60.0s	1.0	s	Changeable at any time
B6-51	0xB633	Detection level of excessive speed deviation	0.0% to 50.0%	20.0	%	Changeable at any time
B6-52	0xB634	Detection time of excessive speed deviation	0.0s to 60.0s	5.0	s	Changeable at any time
B6-53	0xB635	Power dip ride-through gain Kp	1 to 100	40	-	Changeable at any time
B6-54	0xB636	Power dip ride-through integral coefficient Ki	1 to 100	30	-	Changeable at any time
B6-55	0xB637	Deceleration time of power dip ride-through	0.0s to 300.0s	20.0	s	Changeable at any time
B6-56	0xB638	Voltage dip suppression time	0.1s to 600.0s	0.5	s	Changeable at any time
B7-00	0xB700	Number of parallel motors	1 to 200	1	-	Changeable only at stop

Para.	Comm. Addr.	Name	Reference	Default	Unit	Change
B7-01	0xB701	Motor information command word	Bit00: Mutual inductance curve 0: Disabled 1: Enabled Bit01: D- and Q-axis inductance curve 0: Disabled 1: Enabled Bit02: Rotor resistance online auto-tuning 0: Disabled 1: Enabled Bit03: Rotor resistance online auto-tuning method 0: Amplitude 1: Phase Bit04: Motor thermal model 0: Disabled 1: Enabled Bit05: Temperature source of motor thermal model 0: Estimated temperature 1: Temperature detected by sensor Bit06: Torque coefficient calculation of asynchronous motor 0: Torque formula 1: Current distribution Bit07: Torque coefficient calculation of synchronous motor 0: Torque formula 1: Torque matching the rated torque Bit08: Zero speed friction torque calculation 0: Torque linearly decreasing to zero 1: Torque to maintain minimum speed Bit09: Calculation of model parameters based on nameplate parameters 0: Disabled 1: Enabled Bit10: Confirmation of calculating model parameters based on nameplate parameters 0: Default 1: Confirm	0x3	-	Changeable only at stop
B7-02	0xB702	Number of motor pole pairs	0 to 64	0	-	Changeable only at stop
B7-03	0xB703	Motor power factor	0.600 to 1.000	0.860	-	Changeable only at stop
B7-05	0xB705	Expansion card	1: Expansion card 1 2: Expansion card 2	1	-	Changeable only at stop
B7-06	0xB706	ABZ encoder speed measurement mode at low speed	0: Maintain 1: Attenuate 2: Optimized solution	2	-	Changeable only at stop

Para.	Comm. Addr.	Name	Reference	De fault	Unit	Change
B7-07	0xB707	Encoder speed measurement filter time constant	0.000s to 10.000s	0.004	s	Changeable at any time
B7-08	0xB708	Encoder wire breakage software detection coefficient	0.000 to 8.000	1.000	-	Changeable at any time
B7-09	0xB709	Encoder control word	Bit00: Speed measurement 0: Disabled 1: Enabled Bit01: Software detection of wire breakage 0: Disabled 1: Enabled Bit02: Glitch removal 0: Disabled 1: Enabled Bit03: ABZ encoder speed measurement mode 0: Quadruplicated frequency 1: Single pulse	0	-	Changeable only at stop
B7-10	0xB70A	Speed measurement exception count threshold	1 to 100	10	-	Changeable only at stop
B7-11	0xB70B	Motor gear ratio (numerator)	1 to 65535	1	-	Changeable only at stop
B7-12	0xB70C	Motor gear ratio (denominator)	1 to 65535	1	-	Changeable only at stop
B7-13	0xB70D	External input source of encoder	0: 0 1: AI1 2: AI2 3: AI3 4: Pulse reference 5: Communication 6: Multi-reference 7: Motor-driven potentiometer 8: PID Others: F connector	0	-	Changeable only at stop
B7-15	0xB70F	Stator leakage inductance	0.000 mH to 65.535 mH	6.540	mH	Changeable only at stop
B7-16	0xB710	Electromechanical time constant	1 ms to 65535 ms	100	ms	Unchangea ble
B7-17	0xB711	Inertia ratio	0.0% to 6553.5%	120.0	%	Changeable only at stop
B7-18	0xB712	Friction torque	0.0% to 6553.5%	2.0	%	Changeable only at stop

Para.	Comm. Addr.	Name	Reference	De fault	Unit	Change
B7-19	0xB713	Excitation current coefficient 1 of mutual inductance curve (rated)	5.0% to 100.0%	50.0	%	Changeable only at stop
B7-20	0xB714	Excitation current coefficient 2 of mutual inductance curve (rated)	5.0% to 100.0%	75.0	%	Changeable only at stop
B7-21	0xB715	Excitation current coefficient 3 of mutual inductance curve	100.0% to 800.0%	150.0	%	Changeable only at stop
B7-22	0xB716	Excitation current coefficient 4 of mutual inductance curve	100.0% to 800.0%	210.0	%	Changeable only at stop
B7-23	0xB717	Flux coefficient 1 of mutual inductance curve (rated)	10.0% to 100.0%	50.0	%	Changeable only at stop
B7-24	0xB718	Flux coefficient 2 of mutual inductance curve (rated)	10.0% to 100.0%	85.0	%	Changeable only at stop
B7-25	0xB719	Flux coefficient 3 of mutual inductance curve	100.0% to 300.0%	115.0	%	Changeable only at stop
B7-26	0xB71A	Flux coefficient 4 of mutual inductance curve	100.0% to 300.0%	125.0	%	Changeable only at stop
B7-27	0xB71B	Speed point 1 of friction curve	0 RPM to 30000 RPM	15	RPM	Changeable only at stop
B7-28	0xB71C	Speed point 2 of friction curve	0 RPM to 30000 RPM	30	RPM	Changeable only at stop
B7-29	0xB71D	Speed point 3 of friction curve	0 RPM to 30000 RPM	60	RPM	Changeable only at stop
B7-30	0xB71E	Speed point 4 of friction curve	0 RPM to 30000 RPM	120	RPM	Changeable only at stop
B7-31	0xB71F	Speed point 5 of friction curve	0 RPM to 30000 RPM	150	RPM	Changeable only at stop
B7-32	0xB720	Speed point 6 of friction curve	0 RPM to 30000 RPM	300	RPM	Changeable only at stop
B7-33	0xB721	Speed point 7 of friction curve	0 RPM to 30000 RPM	600	RPM	Changeable only at stop
B7-34	0xB722	Speed point 8 of friction curve	0 RPM to 30000 RPM	1200	RPM	Changeable only at stop
B7-35	0xB723	Speed point 9 of friction curve	0 RPM to 30000 RPM	1500	RPM	Changeable only at stop

Para.	Comm. Addr.	Name	Reference	De fault	Unit	Change
B7-36	0xB724	Speed point 10 of friction curve	0 RPM to 30000 RPM	3000	RPM	Changeable only at stop
B7-37	0xB725	Torque point 1 of friction curve	–320 N·m to +320 N·m	0.00	N·m	Changeable only at stop
B7-38	0xB726	Torque point 2 of friction curve	–320 N·m to +320 N·m	0.00	N·m	Changeable only at stop
B7-39	0xB727	Torque point 3 of friction curve	–320 N·m to +320 N·m	0.00	N·m	Changeable only at stop
B7-40	0xB728	Torque point 4 of friction curve	–320 N·m to +320 N·m	0.00	N·m	Changeable only at stop
B7-41	0xB729	Torque point 5 of friction curve	–320 N·m to +320 N·m	0.00	N·m	Changeable only at stop
B7-42	0xB72A	Torque point 6 of friction curve	–320 N·m to +320 N·m	0.00	N·m	Changeable only at stop
B7-43	0xB72B	Torque point 7 of friction curve	–320 N·m to +320 N·m	0.00	N·m	Changeable only at stop
B7-44	0xB72C	Torque point 8 of friction curve	–320 N·m to +320 N·m	0.00	N·m	Changeable only at stop
B7-45	0xB72D	Torque point 9 of friction curve	–320 N·m to +320 N·m	0.00	N·m	Changeable only at stop
B7-46	0xB72E	Torque point 10 of friction curve	–320 N·m to +320 N·m	0.00	N·m	Changeable only at stop
B7-47	0xB72F	Current coefficient starting point of D- and Q-axis inductance curve	–800% to +800.0%	–200	%	Changeable only at stop
B7-48	0xB730	Current coefficient end point of D- and Q-axis inductance curve	–800% to +800.0%	200.0	%	Changeable only at stop
B7-49	0xB731	D axis inductance 1 of D- and Q-axis inductance curve	0.0% to 6553.5%	100.0	%	Changeable only at stop
B7-50	0xB732	D axis inductance 2 of D- and Q-axis inductance curve	0.0% to 6553.5%	100.0	%	Changeable only at stop
B7-51	0xB733	D axis inductance 3 of D- and Q-axis inductance curve	0.0% to 6553.5%	100.0	%	Changeable only at stop
B7-52	0xB734	D axis inductance 4 of D- and Q-axis inductance curve	0.0% to 6553.5%	100.0	%	Changeable only at stop
B7-53	0xB735	D axis inductance 5 of D- and Q-axis inductance curve	0.0% to 6553.5%	100.0	%	Changeable only at stop

Para.	Comm. Addr.	Name	Reference	De fault	Unit	Change
B7-54	0xB736	D axis inductance 6 of D- and Q-axis inductance curve	0.0% to 6553.5%	100.0	%	Changeable only at stop
B7-55	0xB737	D axis inductance 7 of D- and Q-axis inductance curve	0.0% to 6553.5%	100.0	%	Changeable only at stop
B7-56	0xB738	D axis inductance 8 of D- and Q-axis inductance curve	0.0% to 6553.5%	100.0	%	Changeable only at stop
B7-57	0xB739	D axis inductance 9 of D- and Q-axis inductance curve	0.0% to 6553.5%	100.0	%	Changeable only at stop
B7-58	0xB73A	D axis inductance 10 of D- and Q-axis inductance curve	0.0% to 6553.5%	100.0	%	Changeable only at stop
B7-59	0xB73B	D axis inductance 11 of D- and Q-axis inductance curve	0.0% to 6553.5%	100.0	%	Changeable only at stop
B7-60	0xB73C	D axis inductance 12 of D- and Q-axis inductance curve	0.0% to 6553.5%	100.0	%	Changeable only at stop
B7-61	0xB73D	Q axis inductance 1 of D- and Q-axis inductance curve	0.0% to 6553.5%	100.0	%	Changeable only at stop
B7-62	0xB73E	Q axis inductance 2 of D- and Q-axis inductance curve	0.0% to 6553.5%	100.0	%	Changeable only at stop
B7-63	0xB73F	Q axis inductance 3 of D- and Q-axis inductance curve	0.0% to 6553.5%	100.0	%	Changeable only at stop
B7-64	0xB740	Q axis inductance 4 of D- and Q-axis inductance curve	0.0% to 6553.5%	100.0	%	Changeable only at stop
B7-65	0xB741	Q axis inductance 5 of D- and Q-axis inductance curve	0.0% to 6553.5%	100.0	%	Changeable only at stop
B7-66	0xB742	Q axis inductance 6 of D- and Q-axis inductance curve	0.0% to 6553.5%	100.0	%	Changeable only at stop
B7-67	0xB743	Q axis inductance 7 of D- and Q-axis inductance curve	0.0% to 6553.5%	100.0	%	Changeable only at stop
B7-68	0xB744	Q axis inductance 8 of D- and Q-axis inductance curve	0.0% to 6553.5%	100.0	%	Changeable only at stop

Para.	Comm. Addr.	Name	Reference	Default	Unit	Change
B7-69	0xB745	Q axis inductance 9 of D- and Q-axis inductance curve	0.0% to 6553.5%	100.0	%	Changeable only at stop
B7-70	0xB746	Q axis inductance 10 of D- and Q-axis inductance curve	0.0% to 6553.5%	100.0	%	Changeable only at stop
B7-71	0xB747	Q axis inductance 11 of D- and Q-axis inductance curve	0.0% to 6553.5%	100.0	%	Changeable only at stop
B7-72	0xB748	Q axis inductance 12 of D- and Q-axis inductance curve	0.0% to 6553.5%	100.0	%	Changeable only at stop
B8-00	0xB800	Parameter auto-tuning upon startup	Bit00: Synchronous motor pole position auto-tuning upon startup 0: Disabled 1: Enabled Bit01: Quick stator resistance auto-tuning upon startup 0: Disabled 1: Enabled Bit02–Bit03: HFI pole position auto-tuning 0: Disabled 1: Enabled 2: Adaptive Bit04: IGBT shoot-through self-check upon startup 0: Disabled 1: Enabled Bit05: Short-to-ground self-check upon startup (reserved) 0: Disabled 1: Enabled Bit06: Phase loss self-check upon startup (reserved) 0: Disabled 1: Enabled	1	-	Changeable only at stop
B8-01	0xB801	Auto-tuning direction	0 to 1	1	-	Changeable only at stop
B8-02	0xB802	Oscillation suppression gain of synchronous motor back EMF auto-tuning	0.0 to 30.0	3.2	-	Changeable only at stop
B8-03	0xB803	Target speed of rotation auto-tuning	30.0% to 100.0%	70.0	%	Changeable only at stop

Para.	Comm. Addr.	Name	Reference	De fault	Unit	Change
B8-04	0xB804	Target speed 1 of inertia auto-tuning	10.0% to B8-05	40.0	%	Changeable only at stop
B8-05	0xB805	Target speed 2 of inertia auto-tuning	B8-04 to 100.0%	60.0	%	Changeable only at stop
B8-06	0xB806	Overcurrent prevention of mutual inductance saturation curve	0 to 1	1	-	Changeable only at stop
B8-07	0xB807	Auto-tuning items	Bit00: Speed loop parameter adaptation 0: Disabled 1: Enabled Bit01: Current loop parameter adaptation 0: Disabled 1: Enabled Bit02: Drive nonlinear auto-tuning 0: Disabled 1: Enabled Bit03: Inter-phase deviation coefficient auto-tuning 0: Disabled 1: Enabled Bit04: Auto-tuning of initial pole position of synchronous motor 0: Disabled 1: Enabled Bit05: Auto-tuning of D- and Q-axis inductance model of synchronous motor 0: Disabled 1: Enabled Bit06: System inertia auto-tuning 0: Disabled 1: Enabled Bit07: HFI pole position auto-tuning 0: Disabled 1: Enabled	117	-	Changeable only at stop
B8-08	0xB808	OFF3 stop mode	0: Quick stop 1: Stop at maximum capability	0	-	Changeable only at stop
B8-09	0xB809	Stop mode during running	0: OFF1 stop mode 1: OFF2 stop mode 2: OFF3 stop mode	1	-	Changeable only at stop
B8-10	0xB80A	Stop mode for torque control	0: Coast to stop forcibly 1: Switch to speed control mode and then stop 2: Maintain torque control mode until zero speed and then block	1	-	Changeable only at stop
B8-12	0xB80C	Proportional gain adjustment coefficient	0.1 to 2.0	1.0	-	Changeable at any time

Para.	Comm. Addr.	Name	Reference	De fault	Unit	Change
B8-13	0xB80D	Integral gain adjustment coefficient	0.1 to 2.0	1.0	-	Changeable at any time
B8-14	0xB80E	Zero-speed threshold	0.1% to 200.0%	2.0	%	Changeable at any time
B8-15	0xB80F	Zero-speed stop delay	0.00s to 10.00s	0.10	s	Changeable only at stop
B8-16	0xB810	Reference source execution interval	0 to 20	4	-	Changeable only at stop
B8-17	0xB811	Trial current for speed tracking of synchronous motor	5.0% to 50.0%	10.0	%	Changeable only at stop
B8-18	0xB812	Minimum frequency for speed tracking of synchronous motor	0.0 Hz to 100.0 Hz	0.0	Hz	Changeable only at stop
B8-19	0xB813	Angle compensation for speed tracking of synchronous motor	0 to 360	0	-	Changeable only at stop
B8-20	0xB814	Parameter auto-tuning of synchronous motor upon startup	0 to 1	0	-	Changeable at any time
B8-21	0xB815	Current motor angle	0 to 65535	0	-	Unchangea ble
B8-22	0xB816	Forward torque limit 1	0.0 to 400.0	150.0	-	Changeable at any time
B8-23	0xB817	Reverse torque limit 1	0.0 to 400.0	150.0	-	Changeable at any time
B8-24	0xB818	Source of forward torque limit 2	0: 400% Others: F connector	0	-	Changeable at any time
B8-25	0xB819	Source of reverse torque limit 2	0: –400% Others: F connector	0	-	Changeable at any time

Para.	Comm. Addr.	Name	Reference	De fault	Unit	Change
B8-26	0xB81A	Ramp (FRG) selection bit0	0: 0 1: 1 2: Terminal function input 3: DI1 4: DI2 5: DI3 6: DI4 7: DI5 8: DI6 9: DI7 10: DI8 11: DI9 12: DI10 13: DI11 14: DI12 15: DI13 16: DI14 17: DI15 18: DI16 Others: B connector	0	-	Changeable at any time
B8-27	0xB81B	Ramp (FRG) selection bit1	Same as B8-26	0	-	Changeable at any time
B8-30	0xB81E	Motor protection	Bit00: Motor overload determination (reserved) Bit01: Motor overheat detection (reserved) Bit02: PG fault detection (reserved) Bit03: Current control error detection Bit04: Motor stall error detection Bit05: Locked-rotor detection Bit06: Synchronous motor demagnetization protection Bit07: Protection against locked-rotor in SVC speed open-loop control Bit08: Reserved Bit09: Parameter setting error	537	-	Changeable at any time
B8-31	0xB81F	Locked-rotor time	0.0s to 65.0s	2.0	s	Changeable at any time
B8-32	0xB820	Locked-rotor frequency	0.0% to 600.0%	6.0	%	Changeable at any time
B8-33	0xB821	Motor stall detection time	0.0s to 10.0s	0.5	s	Changeable at any time
B8-34	0xB822	Stall detection threshold	0.0% to +100.0%	30.0	%	Changeable at any time
B8-35	0xB823	Current control exception detection time	0.00s to 1.00s	0.05	s	Changeable at any time

Para.	Comm. Addr.	Name	Reference	De fault	Unit	Change
B8-36	0xB824	Current control exception detection threshold	0.0% to 200.0%	25.0	%	Changeable at any time
B8-37	0xB825	Synchronous motor overcurrent threshold	0.0% to 500.0%	300.0	%	Changeable at any time
B8-39	0xB827	Speed deviation detection	0 to 1	1	-	Changeable at any time
B8-40	0xB828	Asynchronous motor FVC model switchover frequency	0% to 1000%	20	%	Changeable only at stop
B8-41	0xB829	Asynchronous motor FVC model switchover hysteresis frequency	10% to 50%	20	%	Changeable only at stop
B8-42	0xB82A	Asynchronous motor FVC observer filter time	5 ms to 100 ms	15	ms	Changeable only at stop
B8-43	0xB82B	Asynchronous motor FVC current model mode	0 to 1	0	-	Changeable only at stop
B8-44	0xB82C	Asynchronous motor FVC pre-excitation output observation angle mode	0 to 1	0	-	Changeable only at stop
B8-45	0xB82D	Asynchronous motor SVC model switchover frequency	10% to 20%	15	%	Changeable only at stop
B8-46	0xB82E	Asynchronous motor SVC observer filter time	5 ms to 50 ms	10	ms	Changeable at any time
B8-47	0xB82F	Asynchronous motor SVC observer gain 1	10% to 500%	100	%	Changeable at any time
B8-48	0xB830	Asynchronous motor SVC observer gain 2	10% to 100%	20	%	Changeable at any time
B8-49	0xB831	Asynchronous motor SVC observer mode	0 to 3	0	-	Changeable only at stop
B8-50	0xB832	Asynchronous motor SVC pre-excitation mode	0 to 1	0	-	Changeable only at stop

Para.	Comm. Addr.	Name	Reference	De fault	Unit	Change
B8-51	0xB833	Asynchronous motor SVC speed tracking mode	0 to 1	0	-	Changeable only at stop
B8-54	0xB836	Synchronous motor 1 model control	Bit00: Low speed processing Bit01: Low speed processing 1 Bit02: Online auto-tuning of resistance Bit03: Online auto-tuning of back EMF Bit04: KS	5	-	Changeable at any time
B8-55	0xB837	Synchronous motor model K1	10 to 3000	200	-	Changeable at any time
B8-56	0xB838	Synchronous motor model K1Max	100 to 6000	3000	-	Changeable at any time
B8-57	0xB839	Synchronous motor model KsMin	0.0 to 4.0	0.3	-	Changeable at any time
B8-58	0xB83A	Synchronous motor model Kspeed	50 to 2000	400	-	Changeable at any time
B8-59	0xB83B	Synchronous motor frequency filter time constant	2 ms to 100 ms	10	ms	Changeable at any time
B8-60	0xB83C	Frequency upper limit of synchronous motor Rs online auto-tuning	1.0% to 20.0%	3.5	%	Changeable at any time
B8-61	0xB83D	Synchronous motor model Kr	0 to 50	10	-	Changeable at any time
B8-62	0xB83E	Synchronous motor model Kr1	0 to 50	5	-	Changeable at any time
B8-63	0xB83F	Synchronous motor low-speed D axis injection current	0% to 100%	20	%	Changeable at any time
B8-64	0xB840	Synchronous motor model LowFreqTime1	0 to 500	50	-	Changeable at any time
B8-67	0xB843	Frequency lower limit of back EMF online auto-tuning	10% to 100%	25	%	Changeable at any time
B8-68	0xB844	Synchronous motor model LowFreq	0.0% to 2.0%	0.3	%	Changeable at any time
B8-69	0xB845	Synchronous motor model LowFreqTime	0 to 100	10	-	Changeable at any time
B8-70	0xB846	Percentage of pole auto-tuning current	50% to 200%	100	%	Changeable at any time

Para.	Comm. Addr.	Name	Reference	De fault	Unit	Change
B8-71	0xB847	Percentage of high frequency response current	0% to 100%	25	%	Changeable at any time
B8-72	0xB848	Percentage of HFI and SVC switching frequency	0% to 30%	10	%	Changeable at any time
B8-73	0xB849	Observer parameter	10 to 200	100	-	Changeable at any time
B8-74	0xB84A	Speed filter cut-off frequency	1 Hz to 200 Hz	10	Hz	Changeable at any time
B8-75	0xB84B	Carrier frequency during NS auto-tuning	2.00 Hz to 16.00 Hz	8.00	Hz	Changeable at any time
B8-76	0xB84C	Automatic calculation of NS auto-tuning voltage	0 to 1	1	-	Changeable at any time
B8-77	0xB84D	Percentage of NS auto-tuning voltage set manually	0% to 100%	10	%	Changeable at any time
B8-78	0xB84E	Duration of HFI stage 1	50 ms to 500 ms	150	ms	Changeable at any time
B8-80	0xB850	Speed loop command word	Bit00: Speed loop 0: Disabled 1: Enabled Bit01: Integration mode 0: Conventional integration 1: Position integration Bit02: Acceleration torque 0: Disabled 1: Enabled Bit03–Bit04: Acceleration source 0: Function transfer torque 1: Automatic calculation 2: Function transfer acceleration Bit05: Anti-load disturbance 0: Disabled 1: Enabled	11	-	Changeable at any time
B8-81	0xB851	Locked-rotor fast integral cancel coefficient	0.0% to +100.0%	0.0	%	Changeable at any time
B8-82	0xB852	Integral torque	–100% to +100.0%	0.0	%	Changeable at any time
B8-83	0xB853	Speed controller frequency window size	0.00 Hz to 10.00 Hz	0.00	Hz	Changeable only at stop

Para.	Comm. Addr.	Name	Reference	De fault	Unit	Change
B8-84	0xB854	Current filter time for torque reference	0.0 ms to 100.0 ms	0.0	ms	Changeable only at stop
B8-85	0xB855	Acceleration torque	0: Inactive 1: AI1 2: AI2 3: AI3 4: Pulse reference 5: Communication 6: Multi-reference 7: Motor-driven potentiometer 8: PID Others: F connector	0	-	Changeable at any time
B8-87	0xB857	Reference model bandwidth	0.00 Hz to 300.00 Hz	0.00	Hz	Changeable at any time
B8-88	0xB858	Torque feedforward coefficient	0.0% to 1000.0%	100.0	%	Changeable at any time
B8-89	0xB859	Vector control reference frequency filter time	0.0 ms to 100.0 ms	0.0	ms	Changeable only at stop
B8-90	0xB85A	Vector control feedback frequency filter time	0.0 ms to 100.0 ms	0.0	ms	Changeable only at stop
B8-91	0xB85B	Load observation bandwidth	0.00 Hz to 300.00 Hz	0.00	Hz	Changeable at any time
B8-92	0xB85C	Load observation coefficient	0.0% to 1000.0%	100.0	%	Changeable at any time
B8-93	0xB85D	Pseudo integral coefficient	0.000 to 10.000	1.000	-	Changeable at any time
B8-94	0xB85E	Torque coefficient enable	0: Disabled 1: Enabled	0	-	Changeable at any time
B8-96	0xB860	Center frequency of notch filter 1	0.0 to 4000.0	4000.0	-	Changeable at any time
B8-97	0xB861	Center frequency of notch filter 2	0.0 to 4000.0	4000.0	-	Changeable at any time
B8-98	0xB862	Integral setting control word	0: Disabled 1: Enabled Others: B connector	0	-	Changeable at any time

Para.	Comm. Addr.	Name	Reference	De fault	Unit	Change
B8-99	0xB863	Integral reference source	0: Digital setting 1: AI1 2: AI2 3: AI3 4: Pulse reference 5: Communication 6: Multi-reference 7: Motor-driven potentiometer 8: PID Others: F connector	0	-	Changeable at any time
B9-00	0xB900	Externally transferred acceleration	0: Inactive 1: AI1 2: AI2 3: AI3 4: Pulse reference 5: Communication 6: Multi-reference 7: Motor-driven potentiometer 8: PID Others: F connector	0	-	Changeable at any time
B9-03	0xB903	Overturning torque limiting coefficient	0.0% to 400.0%	100.0	%	Changeable at any time
B9-04	0xB904	Motoring power limiting coefficient	0.0% to 400.0%	400.0	%	Changeable at any time
B9-05	0xB905	Generating power limiting coefficient	0.0% to 400.0%	400.0	%	Changeable at any time
B9-06	0xB906	Overspeed limiting enable	0 to 1	1	-	Changeable at any time
B9-07	0xB907	Sine wave frequency of bandwidth test	0 Hz to 1000 Hz	0	Hz	Changeable at any time
B9-08	0xB908	Sine wave amplitude of bandwidth test	0% to 100%	0	%	Changeable at any time
B9-09	0xB909	Bandwidth test enable	0 to 4	0	-	Changeable at any time
B9-11	0xB90B	Speed loop parameter calculation mode	0: New solution 1: Compatible solution	1	-	Changeable only at stop
B9-12	0xB90C	Speed loop proportional gain in FVC mode	0.00 Hz to 100.00 Hz	8.00	Hz	Changeable at any time
B9-13	0xB90D	Speed loop integral time in FVC mode	0.000s to 20.000s	0.080	s	Changeable at any time
B9-14	0xB90E	Speed loop proportional gain in SVC mode	0.00 Hz to 100.00 Hz	5.00	Hz	Changeable at any time

Para.	Comm. Addr.	Name	Reference	De fault	Unit	Change
B9-15	0xB90F	Speed loop integral time in SVC mode	0.000s to 20.000s	0.127	s	Changeable at any time
B9-16	0xB910	Low frequency proportional correction coefficient	0.0% to 1000.0%	100.0	%	Changeable at any time
B9-17	0xB911	Low frequency integral correction coefficient	0.0% to 1000.0%	100.0	%	Changeable at any time
B9-18	0xB912	Speed loop adaption factor	0.000 to 10.000	0.200	-	Changeable at any time
B9-19	0xB913	Speed loop adaption switchover lower limit	0.000 to 10.000	0.400	-	Changeable at any time
B9-20	0xB914	Speed loop adaption switchover upper limit	0.000 to 10.000	1.000	-	Changeable at any time
B9-21	0xB915	Speed loop adaption correction upper limit	0.0% to 1000.0%	100.0	%	Changeable at any time
B9-22	0xB916	Speed loop adaption correction lower limit	0.0% to 1000.0%	100.0	%	Changeable at any time
B9-23	0xB917	Flux adaptation enable	0 to 1	0	-	Changeable at any time
B9-24	0xB918	Overspeed controller correction coefficient	0.0% to 1000.0%	100.0	%	Changeable at any time
B9-25	0xB919	VDC control command word	Bit00: VdcMin 0: Disabled 1: Enabled Bit01: VdcMax 0: Disabled 1: Enabled Bit02: Automatic calculation of VDC trigger voltage 0: Disabled 1: Enabled Bit03: VDC control integral action 0: Disabled 1: Enabled	0	-	Changeable at any time
B9-26	0xB91A	Bus capacitance ratio	50.0% to 1000.0%	100.0	%	Changeable at any time

Para.	Comm. Addr.	Name	Reference	De fault	Unit	Change
B9-27	0xB91B	Undervoltage suppression exit hysteresis frequency	0.00 Hz to 10.00 Hz	3.00	Hz	Changeable at any time
B9-28	0xB91C	Minimum VDC failure speed threshold	0.00 Hz to 20.00 Hz	2.00	Hz	Changeable at any time
B9-29	0xB91D	Dynamic adjustment coefficient	0.0% to 1000.0%	100.0	%	Changeable at any time
B9-30	0xB91E	Minimum VDC activation voltage	320.0 V to 540.0 V	430.0	V	Changeable at any time
B9-31	0xB91F	Maximum VDC activation voltage	650.0 V to 800.0 V	770.0	V	Changeable at any time

Para.	Comm. Addr.	Name	Reference	Default	Unit	Change
B9-32	0xB920	Flux linkage control command word	Bit00: Output voltage limit calculation filtering mode 0: Symmetric filtering 1: Asymmetric filtering Bit01: Asynchronous motor inverse proportion curve calculation 0: The inverse proportional synchronization frequency decreases. 1: The inverse proportional speed decreases. Bit02: Flux linkage feedforward calculation by using inverse proportional speed 0: Disabled 1: Enabled Bit03: Reserved Bit04: Reserved Bit05: Field weakening adjustment 0: Disabled 1: Enabled Bit06: Flux linkage derivative feedforward 0: Disabled 1: Enabled Bit07: Energy conservation control 0: Disabled 1: Enabled Bit08: Asynchronous motor flux closed loop 0: Disabled 1: Enabled Bit09: Reserved Bit10: Reserved Bit11: Asynchronous motor pre-excitation mode 0: Pre-excitation based on time 1: Pre-excitation based on current Bit12: Asynchronous motor pre-excitation current 0: Reference current 1: Maximum current allowed by the drive	2357	-	Changeable at any time
B9-33	0xB921	Output voltage upper limit margin for field weakening adjustment	1% to 50%	5	%	Changeable at any time
B9-34	0xB922	Output voltage upper limit margin for auto adjustment of field weakening	1% to 20%	3	%	Changeable at any time
B9-35	0xB923	Filter time for calculating maximum output voltage	0 ms to 3000 ms	30	ms	Changeable at any time

Para.	Comm. Addr.	Name	Reference	De fault	Unit	Change
B9-36	0xB924	Rated flux adjustment coefficient for calculation	0.5 to 2.0	1.0	-	Changeable at any time
B9-37	0xB925	Field weakening frequency adjustment coefficient for calculation	0.8 to 1.2	1.0	-	Changeable at any time
B9-38	0xB926	Slip filter time for calculating field weakening frequency	0 ms to 3000 ms	62	ms	Changeable at any time
B9-39	0xB927	Feedback speed filtering	0 ms to 8000 ms	50	ms	Changeable at any time
B9-40	0xB928	Flux linkage rising filter time	0 ms to 8000 ms	20	ms	Changeable at any time
B9-42	0xB92A	Feedback voltage filter time	0 ms to 3000 ms	5	ms	Changeable at any time
B9-43	0xB92B	Maximum demagnetization current of synchronous motor	0% to 500%	300	%	Changeable at any time
B9-44	0xB92C	Voltage outer loop lower limit coefficient	0 to 500	50	-	Changeable at any time
B9-45	0xB92D	Flux linkage derivative feedforward coefficient	0.0 to 1.5	1.0	-	Changeable at any time
B9-46	0xB92E	Flux linkage derivative feedforward filter time	0 ms to 3000 ms	6	ms	Changeable at any time
B9-47	0xB92F	Torque current rising filter time under energy conservation control	0 ms to 3000 ms	50	ms	Changeable at any time
B9-48	0xB930	Torque current falling filter time under energy conservation control	0 ms to 3000 ms	100	ms	Changeable at any time

Para.	Comm. Addr.	Name	Reference	De fault	Unit	Change
B9-49	0xB931	Flux linkage lower limit coefficient under energy conservation control	0.00 to 0.50	0.10	-	Changeable at any time
B9-51	0xB933	Pre-excitation current	1% to 200%	100	%	Changeable at any time
B9-52	0xB934	Pre-excitation time	1 ms to 30000 ms	1000	ms	Changeable at any time
B9-53	0xB935	Flux linkage closed-loop bandwidth frequency	0.0 Hz to 100.0 Hz	2.0	Hz	Changeable at any time
B9-54	0xB936	Feedback flux linkage filter time coefficient	0 to 200	4	-	Changeable at any time
B9-55	0xB937	Static output flux linkage filter time	0 ms to 5000 ms	10	ms	Changeable at any time
B9-56	0xB938	Current loop mode	0: ImCsr2 mode 1: Complex vector mode 2: 880 mode 3: No field weakening	1	-	Changeable only at stop
B9-57	0xB939	PI regulator proportional gain adaptation with load	0 to 1	0	-	Changeable only at stop
B9-58	0xB93A	Current loop damping	0.2 to 5.0	0.8	-	Changeable at any time
B9-59	0xB93B	Low-speed current loop Kp adjustment	0.1 to 10.0	1.0	-	Changeable at any time
B9-60	0xB93C	High-speed current loop Kp adjustment	0.1 to 10.0	1.0	-	Changeable at any time
B9-61	0xB93D	Low-speed current loop Ki adjustment	0.1 to 10.0	1.0	-	Changeable at any time
B9-62	0xB93E	High-speed current loop Ki adjustment	0.1 to 10.0	2.0	-	Changeable at any time
B9-63	0xB93F	D-axis current loop complex vector adjustment	0.1 to 10.0	1.0	-	Changeable at any time
B9-64	0xB940	Q-axis current loop complex vector adjustment	0.1 to 10.0	1.0	-	Changeable at any time

Para.	Comm. Addr.	Name	Reference	De fault	Unit	Change
B9-65	0xB941	Complex vector hysteresis frequency lower limit as a percentage of rated frequency	0% to B9-66	0	%	Changeable at any time
B9-66	0xB942	Complex vector hysteresis frequency upper limit as a percentage of rated frequency	B9-65 to 150%	0	%	Changeable at any time
B9-67	0xB943	ImCsr2 hysteresis switchover voltage upper limit as a percentage of saturation voltage	B9-68 to 95%	89	%	Changeable at any time
B9-68	0xB944	ImCsr2 hysteresis switchover voltage lower limit as a percentage of saturation voltage	60% to B9-67	79	%	Changeable at any time
B9-69	0xB945	ImCsr2 hysteresis switchover frequency hysteresis range as a percentage of rated frequency	1% to 30%	10	%	Changeable at any time
B9-70	0xB946	ImCsr2 hysteresis switchover frequency lower limit (below which the hysteresis condition does not take effect) as a percentage of the rated frequency	40% to 80%	60	%	Changeable at any time
B9-71	0xB947	ImCsr2 current loop Kss adjustment	0.1 to 10.0	1.0	-	Changeable at any time
B9-72	0xB948	Proportional gain adjustment coefficient corresponding to the maximum torque when proportional gain is adjusted with load	0.1 to 1.0	0.5	-	Changeable at any time

Para.	Comm. Addr.	Name	Reference	De fault	Unit	Change
B9-73	0xB949	Torque upper limit setpoint as a percentage of rated torque when proportional gain is adjusted with load	B9-74 to 300%	200	%	Changeable at any time
B9-74	0xB94A	Torque lower limit setpoint as a percentage of rated torque when proportional gain is adjusted with load	10% to B9-73	100	%	Changeable at any time
B9-75	0xB94B	Derivative feedforward adjustment	0.0 to 1.0	0.0	-	Changeable at any time
B9-76	0xB94C	Decoupling control start frequency as a percentage of rated frequency	20% to 150%	40	%	Changeable at any time
B9-77	0xB94D	Decoupling control filter time adjustment coefficient	0.1 to 3.0	1.0	-	Changeable at any time
B9-78	0xB94E	Decoupling control output adjustment coefficient	0.0 to 1.0	1.0	-	Changeable at any time
B9-79	0xB94F	CPC feedforward enable	0: Disabled 1: Enabled	0	-	Changeable at any time
B9-80	0xB950	Current loop auxiliary command word	Bit00: Complex vector angle limiting 0: Disabled 1: Enabled Bit01: Voltage angle limiting 0: Program internal limiting 1: Parameter setting Bit02: 0 by default 0: No lower limit on the excitation current is imposed during the dynamic process. 1: A lower limit on the excitation current is imposed during the dynamic process in ImCsr2 mode. Bit03–Bit15: Reserved (0 by default)	0	-	Changeable at any time
B9-81	0xB951	Voltage angle upper limit	90° to 180°	150	°	Changeable at any time
B9-82	0xB952	Voltage angle lower limit	0° to 90°	30	°	Changeable at any time

Para.	Comm. Addr.	Name	Reference	De fault	Unit	Change
B9-83	0xB953	Asynchronous motor D axis integral limit	0.500 to 1.000	0.707	-	Changeable at any time
B9-84	0xB954	Current loop carrier frequency upper limit	5.0 to 16.0	8.0	-	Changeable at any time
B9-85	0xB955	Droop enable	0 to 1	0	-	Changeable only at stop
B9-86	0xB956	Droop source	0: Line current 1: Torque reference 2: Speed adjustment output 3: Speed adjustment integral component	1	-	Changeable only at stop
B9-87	0xB957	Frequency reference droop coefficient	0.0% to 50.0%	0.0	%	Changeable at any time
B9-88	0xB958	FVC-SVC switchover mode	0: No switchover 1: Active switchover 2: Passive switchover (The AC drive switches to SVC mode upon detection of encoder wire breakage, and it switches back to FVC mode when the encoder recovers during stop and does not switch back to FVC mode when the encoder recovers during running.) 3: Passive switchover (The AC drive switches to SVC mode upon detection of encoder wire breakage, and it switches back to FVC mode when the encoder recovers during running or stop.)	0	-	Changeable only at stop
B9-89	0xB959	FVC-SVC switchover frequency	10% to 500%	50	%	Changeable only at stop
B9-90	0xB95A	FVC-SVC switchover hysteresis	10% to 100%	10	%	Changeable only at stop
BA-00	0xBA00	Motor type	0: Common asynchronous motor 1: Variable frequency asynchronous motor 2: Permanent magnet synchronous motor	0	-	Changeable only at stop
BA-01	0xBA01	Rated motor power	0.1 kW to 1000.0 kW	3.7	kW	Changeable only at stop
BA-02	0xBA02	Rated motor voltage	1 V to 2000 V	380	V	Changeable only at stop
BA-03	0xBA03	Rated motor current	0.01 A to 655.35 A	9.00	A	Changeable only at stop
BA-04	0xBA04	Rated motor frequency	0.01 Hz to F0-10	50.00	Hz	Changeable only at stop
BA-05	0xBA05	Rated motor speed	1 RPM to 65535 RPM	1460	RPM	Changeable only at stop

Para.	Comm. Addr.	Name	Reference	De fault	Unit	Change
BA-06	0xBA06	Number of parallel motors	1 to 200	1	-	Changeable only at stop
BA-07	0xBA07	Motor information command word	Bit00: Mutual inductance curve 0: Disabled 1: Enabled Bit01: D- and Q-axis inductance curve 0: Disabled 1: Enabled Bit02: Rotor resistance online auto-tuning 0: Disabled 1: Enabled Bit03: Rotor resistance online auto-tuning method 0: Amplitude 1: Phase Bit04: Motor thermal model 0: Disabled 1: Enabled Bit05: Temperature source of motor thermal model 0: Estimated temperature 1: Temperature detected by sensor Bit06: Torque coefficient calculation of asynchronous motor 0: Torque formula 1: Current distribution Bit07: Torque coefficient calculation of synchronous motor 0: Torque formula 1: Torque matching the rated torque Bit08: Zero speed friction torque calculation 0: Torque linearly decreasing to zero 1: Torque to maintain minimum speed Bit09: Calculation of model parameters based on nameplate parameters 0: Disabled 1: Enabled Bit10: Confirmation of calculating model parameters based on nameplate parameters 0: Default 1: Confirm	0x3	-	Changeable only at stop
BA-08	0xBA08	Number of motor pole pairs	0 to 64	0	-	Changeable only at stop
BA-09	0xBA09	Motor power factor	0.600 to 1.000	0.860	-	Changeable only at stop
BA-10	0xBA0A	Encoder PPR	1 to 65535	1024	-	Changeable only at stop

Para.	Comm. Addr.	Name	Reference	De fault	Unit	Change
BA-11	0xBA0B	Encoder type	0: ABZ incremental encoder 1: 23-bit encoder 2: Resolver 3: External input	0	-	Changeable only at stop
BA-12	0xBA0C	Speed feedback PG card	0: Local PG card 1: Extension PG card	0	-	Changeable only at stop
BA-13	0xBA0D	Number of resolver pole pairs	1 to 65535	1	-	Changeable only at stop
BA-15	0xBA0F	Speed feedback PG wire breakage detection time	0.0s to 10.0s	0.0	s	Changeable only at stop
BA-16	0xBA10	A/B phase sequence of encoder	0: Forward 1: Reverse	0	-	Changeable only at stop
BA-17	0xBA11	Encoder installation angle	0.0° to 359.9°	0.0	°	Changeable only at stop
BA-18	0xBA12	Expansion card	1: Expansion card 1 2: Expansion card 2	1	-	Changeable only at stop
BA-19	0xBA13	ABZ encoder speed measurement mode at low speed	0: Maintain 1: Attenuate 2: Optimized solution	2	-	Changeable only at stop
BA-20	0xBA14	Encoder speed measurement filter time constant	0.000s to 10.000s	0.004	s	Changeable at any time
BA-21	0xBA15	Encoder wire breakage software detection coefficient	0.000 to 8.000	1.000	-	Changeable at any time
BA-22	0xBA16	Encoder control word	Bit00: Speed measurement 0: Disabled 1: Enabled Bit01: Software detection of wire breakage 0: Disabled 1: Enabled Bit02: Glitch removal 0: Disabled 1: Enabled Bit03: ABZ encoder speed measurement mode 0: Quadruplicated frequency 1: Single pulse	0	-	Changeable only at stop
BA-23	0xBA17	Speed measurement exception count threshold	1 to 100	10	-	Changeable only at stop
BA-24	0xBA18	Motor gear ratio (numerator)	1 to 65535	1	-	Changeable only at stop

Para.	Comm. Addr.	Name	Reference	De fault	Unit	Change
BA-25	0xBA19	Motor gear ratio (denominator)	1 to 65535	1	-	Changeable only at stop
BA-26	0xBA1A	External input source of encoder	0: 0 1: AI1 2: AI2 3: AI3 4: Pulse reference 5: Communication 6: Multi-reference 7: Motor-driven potentiometer 8: PID Others: F connector	0	-	Unchangea ble
BA-29	0xBA1D	Auto-tuning	0: No operation 1: Static auto-tuning on partial parameters of asynchronous motor 2: Dynamic auto-tuning on asynchronous motor 3: Static auto-tuning on all parameters of asynchronous motor 4: Inertia auto-tuning 5: Deadzone auto-tuning 11: With-load auto-tuning on synchronous motor (excluding back EMF) 12: No-load dynamic auto-tuning on synchronous motor 13: Static auto-tuning on all parameters of synchronous motor (excluding zero point angle)	0	-	Changeable only at stop
BA-30	0xBA1E	Asynchronous motor stator resistance	0.001 Ω to 65.535 Ω	1.204	Ω	Changeable only at stop
BA-31	0xBA1F	Asynchronous motor rotor resistance	0.001 Ω to 65.535 Ω	0.908	Ω	Changeable only at stop
BA-32	0xBA20	Asynchronous motor leakage inductance	0.01 mH to 655.35 mH	5.28	mH	Changeable only at stop
BA-33	0xBA21	Asynchronous motor mutual inductance	0.1 mH to 6553.5 mH	156.8	mH	Changeable only at stop
BA-34	0xBA22	Asynchronous motor no-load current	0.01 A to BA-03	4.20	A	Changeable only at stop
BA-35	0xBA23	Synchronous motor stator resistance	0.001 Ω to 65.535 Ω	1.204	Ω	Changeable only at stop
BA-36	0xBA24	Synchronous motor D axis inductance	0.01 mH to 655.35 mH	5.28	mH	Changeable only at stop
BA-37	0xBA25	Synchronous motor Q axis inductance	0.01 mH to 655.35 mH	5.28	mH	Changeable only at stop

Para.	Comm. Addr.	Name	Reference	De fault	Unit	Change
BA-39	0xBA27	Synchronous motor back EMF coefficient	0.0 V to 6553.5 V	300.0	V	Changeable only at stop
BA-40	0xBA28	Stator leakage inductance	0.000 mH to 65.535 mH	6.540	mH	Changeable only at stop
BA-41	0xBA29	Electromechanical time constant	1 ms to 65535 ms	100	ms	Unchangea ble
BA-42	0xBA2A	Inertia ratio	0.0% to 6553.5%	120.0	%	Changeable only at stop
BA-43	0xBA2B	Friction torque	0.0% to 6553.5%	2.0	%	Changeable only at stop
BA-44	0xBA2C	Excitation current coefficient 1 of mutual inductance curve (rated)	5.0% to 100.0%	50.0	%	Changeable only at stop
BA-45	0xBA2D	Excitation current coefficient 2 of mutual inductance curve (rated)	5.0% to 100.0%	75.0	%	Changeable only at stop
BA-46	0xBA2E	Excitation current coefficient 3 of mutual inductance curve	100.0% to 800.0%	150.0	%	Changeable only at stop
BA-47	0xBA2F	Excitation current coefficient 4 of mutual inductance curve	100.0% to 800.0%	210.0	%	Changeable only at stop
BA-48	0xBA30	Flux coefficient 1 of mutual inductance curve (rated)	10.0% to 100.0%	50.0	%	Changeable only at stop
BA-49	0xBA31	Flux coefficient 2 of mutual inductance curve (rated)	10.0% to 100.0%	85.0	%	Changeable only at stop
BA-50	0xBA32	Flux coefficient 3 of mutual inductance curve	100.0% to 300.0%	115.0	%	Changeable only at stop
BA-51	0xBA33	Flux coefficient 4 of mutual inductance curve	100.0% to 300.0%	125.0	%	Changeable only at stop
BA-52	0xBA34	Speed point 1 of friction curve	0 RPM to 30000 RPM	15	RPM	Changeable only at stop
BA-53	0xBA35	Speed point 2 of friction curve	0 RPM to 30000 RPM	30	RPM	Changeable only at stop
BA-54	0xBA36	Speed point 3 of friction curve	0 RPM to 30000 RPM	60	RPM	Changeable only at stop

Para.	Comm. Addr.	Name	Reference	De fault	Unit	Change
BA-55	0xBA37	Speed point 4 of friction curve	0 RPM to 30000 RPM	120	RPM	Changeable only at stop
BA-56	0xBA38	Speed point 5 of friction curve	0 RPM to 30000 RPM	150	RPM	Changeable only at stop
BA-57	0xBA39	Speed point 6 of friction curve	0 RPM to 30000 RPM	300	RPM	Changeable only at stop
BA-58	0xBA3A	Speed point 7 of friction curve	0 RPM to 30000 RPM	600	RPM	Changeable only at stop
BA-59	0xBA3B	Speed point 8 of friction curve	0 RPM to 30000 RPM	1200	RPM	Changeable only at stop
BA-60	0xBA3C	Speed point 9 of friction curve	0 RPM to 30000 RPM	1500	RPM	Changeable only at stop
BA-61	0xBA3D	Speed point 10 of friction curve	0 RPM to 30000 RPM	3000	RPM	Changeable only at stop
BA-62	0xBA3E	Torque point 1 of friction curve	–320 N·m to +320 N·m	0.00	N·m	Changeable only at stop
BA-63	0xBA3F	Torque point 2 of friction curve	–320 N·m to +320 N·m	0.00	N·m	Changeable only at stop
BA-64	0xBA40	Torque point 3 of friction curve	–320 N·m to +320 N·m	0.00	N·m	Changeable only at stop
BA-65	0xBA41	Torque point 4 of friction curve	–320 N·m to +320 N·m	0.00	N·m	Changeable only at stop
BA-66	0xBA42	Torque point 5 of friction curve	–320 N·m to +320 N·m	0.00	N·m	Changeable only at stop
BA-67	0xBA43	Torque point 6 of friction curve	–320 N·m to +320 N·m	0.00	N·m	Changeable only at stop
BA-68	0xBA44	Torque point 7 of friction curve	–320 N·m to +320 N·m	0.00	N·m	Changeable only at stop
BA-69	0xBA45	Torque point 8 of friction curve	–320 N·m to +320 N·m	0.00	N·m	Changeable only at stop
BA-70	0xBA46	Torque point 9 of friction curve	–320 N·m to +320 N·m	0.00	N·m	Changeable only at stop
BA-71	0xBA47	Torque point 10 of friction curve	–320 N·m to +320 N·m	0.00	N·m	Changeable only at stop
BA-72	0xBA48	Current coefficient starting point of D- and Q-axis inductance curve	–800% to +800.0%	–200	%	Changeable only at stop
BA-73	0xBA49	Current coefficient end point of D- and Q-axis inductance curve	–800% to +800.0%	200.0	%	Changeable only at stop
BA-74	0xBA4A	D axis inductance 1 of D- and Q-axis inductance curve	0.0% to 6553.5%	100.0	%	Changeable only at stop

Para.	Comm. Addr.	Name	Reference	De fault	Unit	Change
BA-75	0xBA4B	D axis inductance 2 of D- and Q-axis inductance curve	0.0% to 6553.5%	100.0	%	Changeable only at stop
BA-76	0xBA4C	D axis inductance 3 of D- and Q-axis inductance curve	0.0% to 6553.5%	100.0	%	Changeable only at stop
BA-77	0xBA4D	D axis inductance 4 of D- and Q-axis inductance curve	0.0% to 6553.5%	100.0	%	Changeable only at stop
BA-78	0xBA4E	D axis inductance 5 of D- and Q-axis inductance curve	0.0% to 6553.5%	100.0	%	Changeable only at stop
BA-79	0xBA4F	D axis inductance 6 of D- and Q-axis inductance curve	0.0% to 6553.5%	100.0	%	Changeable only at stop
BA-80	0xBA50	D axis inductance 7 of D- and Q-axis inductance curve	0.0% to 6553.5%	100.0	%	Changeable only at stop
BA-81	0xBA51	D axis inductance 8 of D- and Q-axis inductance curve	0.0% to 6553.5%	100.0	%	Changeable only at stop
BA-82	0xBA52	D axis inductance 9 of D- and Q-axis inductance curve	0.0% to 6553.5%	100.0	%	Changeable only at stop
BA-83	0xBA53	D axis inductance 10 of D- and Q-axis inductance curve	0.0% to 6553.5%	100.0	%	Changeable only at stop
BA-84	0xBA54	D axis inductance 11 of D- and Q-axis inductance curve	0.0% to 6553.5%	100.0	%	Changeable only at stop
BA-85	0xBA55	D axis inductance 12 of D- and Q-axis inductance curve	0.0% to 6553.5%	100.0	%	Changeable only at stop
BA-86	0xBA56	Q axis inductance 1 of D- and Q-axis inductance curve	0.0% to 6553.5%	100.0	%	Changeable only at stop
BA-87	0xBA57	Q axis inductance 2 of D- and Q-axis inductance curve	0.0% to 6553.5%	100.0	%	Changeable only at stop
BA-88	0xBA58	Q axis inductance 3 of D- and Q-axis inductance curve	0.0% to 6553.5%	100.0	%	Changeable only at stop
BA-89	0xBA59	Q axis inductance 4 of D- and Q-axis inductance curve	0.0% to 6553.5%	100.0	%	Changeable only at stop

Para.	Comm. Addr.	Name	Reference	De fault	Unit	Change
BA-90	0xBA5A	Q axis inductance 5 of D- and Q-axis inductance curve	0.0% to 6553.5%	100.0	%	Changeable only at stop
BA-91	0xBA5B	Q axis inductance 6 of D- and Q-axis inductance curve	0.0% to 6553.5%	100.0	%	Changeable only at stop
BA-92	0xBA5C	Q axis inductance 7 of D- and Q-axis inductance curve	0.0% to 6553.5%	100.0	%	Changeable only at stop
BA-93	0xBA5D	Q axis inductance 8 of D- and Q-axis inductance curve	0.0% to 6553.5%	100.0	%	Changeable only at stop
BA-94	0xBA5E	Q axis inductance 9 of D- and Q-axis inductance curve	0.0% to 6553.5%	100.0	%	Changeable only at stop
BA-95	0xBA5F	Q axis inductance 10 of D- and Q-axis inductance curve	0.0% to 6553.5%	100.0	%	Changeable only at stop
BA-96	0xBA60	Q axis inductance 11 of D- and Q-axis inductance curve	0.0% to 6553.5%	100.0	%	Changeable only at stop
BA-97	0xBA61	Q axis inductance 12 of D- and Q-axis inductance curve	0.0% to 6553.5%	100.0	%	Changeable only at stop
BB-00	0xBB00	V/f curve	0: Straight-line V/f curve 1: Multi-point V/f curve 2: Reserved 3: Reserved 4: Reserved 5: Reserved 6: Reserved 7: Reserved 8: Reserved 9: Reserved 10: V/f complete separation mode 11: V/f half separation mode	0	-	Changeable only at stop
BB-01	0xBB01	Torque boost	0.0% to 30.0%	3.0	%	Changeable at any time
BB-02	0xBB02	Cut-off frequency of torque boost	0.00 Hz to F0-10	50.00	Hz	Changeable only at stop
BB-03	0xBB03	Multi-point V/f frequency 1	0.00 Hz to BB-05	0.00	Hz	Changeable only at stop
BB-04	0xBB04	Multi-point V/f voltage 1	0.0% to +100.0%	0.0	%	Changeable only at stop
BB-05	0xBB05	Multi-point V/f frequency 2	BB-03 to BB-07	0.00	Hz	Changeable only at stop

Para.	Comm. Addr.	Name	Reference	De fault	Unit	Change
BB-06	0xBB06	Multi-point V/f voltage 2	0.0% to +100.0%	0.0	%	Changeable only at stop
BB-07	0xBB07	Multi-point V/f frequency 3	BB-05 to BA-04	0.00	Hz	Changeable only at stop
BB-08	0xBB08	Multi-point V/f voltage 3	0.0% to +100.0%	0.0	%	Changeable only at stop
BB-09	0xBB09	V/f slip compensation gain	0.0 to 200.0	0.0	-	Changeable at any time
BB-10	0xBB0A	V/f overexcitation gain	0 to 200	64	-	Changeable at any time
BB-11	0xBB0B	V/f oscillation suppression gain	0 to 100	40	-	Changeable at any time
BB-12	0xBB0C	V/f oscillation suppression	0: Disabled 1: Enabled	1	-	Changeable at any time
BB-13	0xBB0D	Voltage source for V/f separation	0: Digital setting (BB-14) 1: AI1 2: AI2 3: AI3 4: Pulse reference (DI5) 5: Multi-reference 6: Simple PLC 7: PID 8: Communication Others: F connector	0	-	Changeable at any time
BB-14	0xBB0E	V/f separation voltage	0 V to BA-02	0	V	Changeable at any time
BB-15	0xBB0F	Voltage rise time of V/f separation	0.0s to 1000.0s	0.0	s	Changeable at any time
BB-16	0xBB10	Voltage fall time of V/f separation	0.0s to 1000.0s	0.0	s	Changeable at any time
BB-17	0xBB11	Stop mode for V/f separation	0: Frequency and voltage decline to 0 independently 1: Frequency declines to 0 after voltage declines to 0 2: Coast to stop (new)	0	-	Changeable at any time
BB-18	0xBB12	Overcurrent stall suppression action current	50% to 200%	150	%	Changeable only at stop
BB-19	0xBB13	Overcurrent stall suppression	0: Disabled 1: Enabled	1	-	Changeable only at stop
BB-20	0xBB14	Overcurrent stall suppression gain	1 to 100	20	-	Changeable at any time

Para.	Comm. Addr.	Name	Reference	De fault	Unit	Change
BB-21	0xBB15	Compensation coefficient of speed multiplying overcurrent stall suppression action current	50% to 200%	100	%	Changeable only at stop
BB-22	0xBB16	Overvoltage stall suppression action voltage	330.0 V to 800.0 V	770.0	V	Changeable at any time
BB-23	0xBB17	Overvoltage stall suppression	0: Disabled 1: Enabled	1	-	Changeable only at stop
BB-24	0xBB18	Overvoltage stall suppression frequency gain	1 to 100	30	-	Changeable at any time
BB-25	0xBB19	Overvoltage stall suppression voltage gain	1 to 100	30	-	Changeable at any time
BB-26	0xBB1A	Frequency rise threshold for overvoltage stall suppression	0 Hz to 50 Hz	5	Hz	Changeable only at stop
BB-27	0xBB1B	Slip compensation filter time	0.1s to 10.0s	0.5	s	Changeable only at stop
BB-28	0xBB1C	Multi-point curve source	0: 3-point curve 1: Multi-point curve module A 2: Multi-point curve module B	0	-	Changeable only at stop
BB-33	0xBB21	Online torque compensation gain	80 to 150	100	-	Changeable only at stop
BB-34	0xBB22	ImaxKi coefficient	10% to 1000%	100	%	Changeable only at stop
BB-35	0xBB23	Overcurrent suppression threshold (relative to rated motor current)	80% to 300%	200	%	Changeable only at stop
BB-36	0xBB24	Frequency threshold for overcurrent suppression field weakening	100% to 500%	100	%	Changeable only at stop
BB-37	0xBB25	IT filter time	10 ms to 1000 ms	100	ms	Changeable only at stop
BB-38	0xBB26	Slip compensation mode	0: Disabled 1: Slip compensation without PG 2: Slip compensation with PG	1	-	Changeable only at stop

Para.	Comm. Addr.	Name	Reference	De fault	Unit	Change
BB-39	0xBB27	VdcMaxCtrl allowed runtime	0.0s to 100.0s	0.0	s	Changeable only at stop
BB-40	0xBB28	Upper limit of V/f separation voltage	50.0% to 200.0%	100.0	%	Changeable only at stop
BB-41	0xBB29	RFG time of V/f separation frequency	0: RFG time forced to 0 1: Preset RFG time	0	-	Changeable only at stop
BB-42	0xBB2A	Cut-off frequency of V/f oscillation suppression filter	1.0 Hz to 50.0 Hz	8.0	Hz	Changeable at any time
BB-43	0xBB2B	Cut-off frequency threshold for V/f oscillation suppression	10 Hz to 3000 Hz	200	Hz	Changeable at any time
BB-44	0xBB2C	VdcMaxCtrl feedforward coefficient	0% to 500%	0	%	Changeable at any time
BB-50	0xBB32	PMVVC low-speed IF	0: Disabled 1: Enabled	1	-	Changeable only at stop
BB-51	0xBB33	PMVVC low-speed IF current	30 to 250	100	-	Changeable only at stop
BB-52	0xBB34	PMVVC low-speed IF speed switching threshold	2.0% to 100.0%	10.0	%	Changeable only at stop
BB-53	0xBB35	PMVVC oscillation suppression gain coefficient	0 to 500	100	-	Changeable at any time
BB-54	0xBB36	PMVVC filter time coefficient	0 to 500	100	-	Changeable at any time
BB-55	0xBB37	PMVVC energy conservation control mode	0: Fixed straight-line V/f curve 1: Fixed 30% reactive current 2: MTPA control	2	-	Changeable only at stop
BC-00	0xBC00	Startup mode	0: Direct start 1: Flying start 2: Pre-excitation start (AC asynchronous motor) 3: SVC quick start	0	-	Changeable at any time
BC-01	0xBC01	Speed tracking mode	0: From the stop frequency 1: From the power frequency 2: From the maximum frequency 3: Reserved 4: Magnetic field directional speed tracking (MD290)	0	-	Changeable at any time
BC-02	0xBC02	Speed of speed tracking	1 to 100	20	-	Changeable at any time
BC-03	0xBC03	Startup frequency	0.00 Hz to 10.00 Hz	0.00	Hz	Changeable at any time

Para.	Comm. Addr.	Name	Reference	De fault	Unit	Change
BC-04	0xBC04	Startup frequency hold time	0.0s to 100.0s	0.0	s	Changeable only at stop
BC-05	0xBC05	DC braking current at startup	0% to 100%	50	%	Changeable only at stop
BC-06	0xBC06	DC braking time at startup	0.0s to 100.0s	0.0	s	Changeable only at stop
BC-07	0xBC07	Stop mode	0: Decelerate to stop 1: Coast to stop 2: Stop at maximum capability	0	-	Changeable at any time
BC-08	0xBC08	Start frequency of DC braking at stop	0.00 Hz to F0-10	0.00	Hz	Changeable at any time
BC-09	0xBC09	DC braking delay at stop	0.0s to 100.0s	0.0	s	Changeable at any time
BC-10	0xBC0A	DC braking current at stop	0% to 100%	50	%	Changeable at any time
BC-11	0xBC0B	DC braking time at stop	0.0s to 100.0s	0.0	s	Changeable at any time
BC-12	0xBC0C	Speed tracking sweep current limit closed loop Kp	0 to 1000	500	-	Changeable at any time
BC-13	0xBC0D	Speed tracking sweep current limit closed loop Ki	0 to 1000	800	-	Changeable at any time
BC-14	0xBC0E	Speed tracking current	30% to 200%	80	%	Changeable only at stop
BC-15	0xBC0F	Current loop multiple	10% to 600%	100	%	Changeable at any time
BC-16	0xBC10	Demagnetization time (valid for asynchronous motors)	0.00s to 5.00s	0.50	s	Changeable at any time
BC-17	0xBC11	Overexcitation enable	0: Disabled 2: Enabled during deceleration 3: Enabled always	0	-	Changeable at any time
BC-18	0xBC12	Overexcitation suppression current	0% to 150%	100	%	Changeable at any time
BC-19	0xBC13	Overexcitation gain	0.01 to 2.50	1.25	-	Changeable at any time

Para.	Comm. Addr.	Name	Reference	Default	Unit	Change
BC-20	0xBC14	Parameter auto-tuning upon startup	Bit00: Synchronous motor pole position auto-tuning upon startup 0: Disabled 1: Enabled Bit01: Quick stator resistance auto-tuning upon startup 0: Disabled 1: Enabled Bit02–Bit03: HFI pole position auto-tuning 0: Disabled 1: Enabled 2: Adaptive Bit04: IGBT shoot-through self-check upon startup 0: Disabled 1: Enabled Bit05: Short-to-ground self-check upon startup (reserved) 0: Disabled 1: Enabled Bit06: Phase loss self-check upon startup (reserved) 0: Disabled 1: Enabled	1	-	Changeable only at stop
BC-21	0xBC15	Auto-tuning direction	0 to 1	1	-	Changeable only at stop
BC-22	0xBC16	Oscillation suppression gain of synchronous motor back EMF auto-tuning	0.0 to 30.0	3.2	-	Changeable only at stop
BC-23	0xBC17	Target speed of rotation auto-tuning	30.0% to 100.0%	70.0	%	Changeable only at stop
BC-24	0xBC18	Target speed 1 of inertia auto-tuning	10.0% to BC-25	40.0	%	Changeable only at stop
BC-25	0xBC19	Target speed 2 of inertia auto-tuning	BC-24 to 100.0%	60.0	%	Changeable only at stop
BC-26	0xBC1A	Overcurrent prevention of mutual inductance saturation curve	0 to 1	1	-	Changeable only at stop

Para.	Comm. Addr.	Name	Reference	De fault	Unit	Change
BC-27	0xBC1B	Auto-tuning items	Bit00: Speed loop parameter adaptation 0: Disabled 1: Enabled Bit01: Current loop parameter adaptation 0: Disabled 1: Enabled Bit02: Drive nonlinear auto-tuning 0: Disabled 1: Enabled Bit03: Inter-phase deviation coefficient auto-tuning 0: Disabled 1: Enabled Bit04: Auto-tuning of initial pole position of synchronous motor 0: Disabled 1: Enabled Bit05: Auto-tuning of D- and Q-axis inductance model of synchronous motor 0: Disabled 1: Enabled Bit06: System inertia auto-tuning 0: Disabled 1: Enabled Bit07: HFI pole position auto-tuning 0: Disabled 1: Enabled	117	-	Changeable only at stop
BC-28	0xBC1C	OFF3 stop mode	0: Quick stop 1: Stop at maximum capability	0	-	Changeable only at stop
BC-29	0xBC1D	Stop mode during running	0: OFF1 stop mode 1: OFF2 stop mode 2: OFF3 stop mode	1	-	Changeable only at stop
BC-30	0xBC1E	Stop mode for torque control	0: Coast to stop forcibly 1: Switch to speed control mode and then stop 2: Maintain torque control mode until zero speed and then block	1	-	Changeable only at stop
BC-32	0xBC20	Proportional gain adjustment coefficient	0.1 to 2.0	1.0	-	Changeable at any time
BC-33	0xBC21	Integral gain adjustment coefficient	0.1 to 2.0	1.0	-	Changeable at any time
BC-34	0xBC22	Zero-speed threshold	0.1% to 200.0%	2.0	%	Changeable at any time
BC-35	0xBC23	Zero-speed stop delay	0.00s to 10.00s	0.10	s	Changeable only at stop

Para.	Comm. Addr.	Name	Reference	De fault	Unit	Change
BC-36	0xBC24	Reference source execution interval	0 to 20	4	-	Changeable only at stop
BC-37	0xBC25	Trial current for speed tracking of synchronous motor	5.0% to 50.0%	10.0	%	Changeable only at stop
BC-38	0xBC26	Minimum frequency for speed tracking of synchronous motor	0.0 Hz to 100.0 Hz	0.0	Hz	Changeable only at stop
BC-39	0xBC27	Angle compensation for speed tracking of synchronous motor	0 to 360	0	-	Changeable only at stop
BC-40	0xBC28	Parameter auto-tuning of synchronous motor upon startup	0 to 1	0	-	Changeable at any time
BC-41	0xBC29	Current motor angle	0 to 65535	0	-	Unchangea ble
BC-42	0xBC2A	Forward torque limit 1	0.0 to 400.0	150.0	-	Changeable at any time
BC-43	0xBC2B	Reverse torque limit 1	0.0 to 400.0	150.0	-	Changeable at any time
BC-44	0xBC2C	Source of forward torque limit 2	0: 400% Others: F connector	0	-	Changeable at any time
BC-45	0xBC2D	Source of reverse torque limit 2	0: –400% Others: F connector	0	-	Changeable at any time
BC-46	0xBC2E	Ramp (FRG) selection bit0	0: 0 1: 1 2: Terminal function input 3: DI1 4: DI2 5: DI3 6: DI4 7: DI5 8: DI6 9: DI7 10: DI8 11: DI9 12: DI10 13: DI11 14: DI12 15: DI13 16: DI14 17: DI15 18: DI16 Others: B connector	0	-	Changeable at any time

Para.	Comm. Addr.	Name	Reference	De fault	Unit	Change
BC-47	0xBC2F	Ramp (FRG) selection bit1	Same as BC-46	0	-	Changeable at any time
BC-50	0xBC32	Motor overload protection	0: Disabled 1: Enabled	1	-	Changeable at any time
BC-51	0xBC33	Motor overload protection gain	0.20 to 10.00	1.00	-	Changeable at any time
BC-52	0xBC34	Motor overload pre-warning coefficient	50% to 100%	80	%	Changeable at any time
BC-53	0xBC35	Overvoltage stall suppression gain	1 to 100	30	-	Changeable at any time
BC-54	0xBC36	Overvoltage stall protection voltage	330.0 V to 800.0 V	770.0	V	Changeable at any time
BC-55	0xBC37	Input phase loss/ Contactor pickup protection	Ones: Input phase loss protection 0: Disabled 1: Protection enabled when both software and hardware input phase loss conditions are met 2: Protection enabled when software input phase loss conditions are met 3: Protection enabled when hardware input phase loss conditions are met Tens: Contactor pickup protection 0: Disabled 1: Enabled	11	-	Changeable at any time
BC-56	0xBC38	Output phase loss protection	Ones: Output phase loss protection upon power-on 0: Disabled 1: Enabled Tens: Output phase loss protection before running 0: Disabled 1: Enabled	1	-	Changeable at any time
BC-57	0xBC39	Power dip ride-through	0: Disabled 1: Decelerate 2: Decelerate to stop 3: Suppress voltage dip	0	-	Changeable only at stop
BC-58	0xBC3A	Voltage threshold for disabling power dip ride-through	80% to 100%	85	%	Changeable only at stop
BC-59	0xBC3B	Delay of voltage recovery from power dip	0.0s to 100.0s	0.5	s	Changeable only at stop
BC-60	0xBC3C	Voltage threshold for enabling power dip ride-through	60% to 100%	80	%	Changeable only at stop
BC-61	0xBC3D	Protection upon load loss	0: Disabled 1: Enabled	0	-	Changeable at any time

Para.	Comm. Addr.	Name	Reference	De fault	Unit	Change
BC-62	0xBC3E	Load loss detection level	0.0% to +100.0%	10.0	%	Changeable at any time
BC-63	0xBC3F	Load loss detection time	0.0s to 60.0s	1.0	s	Changeable at any time
BC-64	0xBC40	Overspeed detection level	0.0% to 50.0%	20.0	%	Changeable at any time
BC-65	0xBC41	Overspeed detection time	0.0s to 60.0s	1.0	s	Changeable at any time
BC-66	0xBC42	Detection level of excessive speed deviation	0.0% to 50.0%	20.0	%	Changeable at any time
BC-67	0xBC43	Detection time of excessive speed deviation	0.0s to 60.0s	5.0	s	Changeable at any time
BC-68	0xBC44	Power dip ride-through gain Kp	1 to 100	40	-	Changeable at any time
BC-69	0xBC45	Power dip ride-through integral coefficient Ki	1 to 100	30	-	Changeable at any time
BC-70	0xBC46	Deceleration time of power dip ride-through	0.0s to 300.0s	20.0	s	Changeable at any time
BC-71	0xBC47	Voltage dip suppression time	0.1s to 600.0s	0.5	s	Changeable at any time
BC-72	0xBC48	Motor protection	Bit00: Motor overload determination (reserved) Bit01: Motor overheat detection (reserved) Bit02: PG fault detection (reserved) Bit03: Current control error detection Bit04: Motor stall error detection Bit05: Locked-rotor detection Bit06: Synchronous motor demagnetization protection Bit07: Protection against locked-rotor in SVC speed open-loop control Bit08: Reserved Bit09: Parameter setting error	537	-	Changeable at any time
BC-73	0xBC49	Locked-rotor time	0.0s to 65.0s	2.0	s	Changeable at any time
BC-74	0xBC4A	Locked-rotor frequency	0.0% to 600.0%	6.0	%	Changeable at any time
BC-75	0xBC4B	Motor stall detection time	0.0s to 10.0s	0.5	s	Changeable at any time
BC-76	0xBC4C	Stall detection threshold	0.0% to +100.0%	30.0	%	Changeable at any time

Para.	Comm. Addr.	Name	Reference	De fault	Unit	Change
BC-77	0xBC4D	Current control exception detection time	0.00s to 1.00s	0.05	s	Changeable at any time
BC-78	0xBC4E	Current control exception detection threshold	0.0% to 200.0%	25.0	%	Changeable at any time
BC-79	0xBC4F	Synchronous motor overcurrent threshold	0.0% to 500.0%	300.0	%	Changeable at any time
BC-81	0xBC51	Speed deviation detection	0 to 1	1	-	Changeable at any time
BC-82	0xBC52	Skip frequency 1	0.00 Hz to F0-10	0.00	Hz	Changeable at any time
BC-83	0xBC53	Skip frequency 2	0.00 Hz to F0-10	0.00	Hz	Changeable at any time
BC-84	0xBC54	Skip frequency 3	0.00 Hz to F0-10	0.00	Hz	Changeable at any time
BC-85	0xBC55	Skip frequency 4	0.00 Hz to F0-10	0.00	Hz	Changeable at any time
BC-86	0xBC56	Skip frequency band	0.00 Hz to F0-10	0.00	Hz	Changeable at any time
BC-87	0xBC57	Source of frequency upper limit	0: F0-12 1: AI1 2: AI2 3: AI3 4: Pulse reference 5: Communication Others: F connector	0	-	Changeable only at stop
BC-88	0xBC58	Frequency upper limit	BC-90 to F0-10	50.00	Hz	Changeable at any time
BC-89	0xBC59	Frequency upper limit offset	0.00 Hz to F0-10 (maximum frequency)	0.00	Hz	Changeable at any time
BC-90	0xBC5A	Frequency lower limit	0.00 Hz to BC-88	0.00	Hz	Changeable at any time
BC-91	0xBC5B	Speed/Torque control mode	0: Speed control 1: Torque control	0	-	Changeable at any time
BD-00	0xBD00	Asynchronous motor FVC model switchover frequency	0% to 1000%	20	%	Changeable only at stop
BD-01	0xBD01	Asynchronous motor FVC model switchover hysteresis frequency	10% to 50%	20	%	Changeable only at stop

Para.	Comm. Addr.	Name	Reference	De fault	Unit	Change
BD-02	0xBD02	Asynchronous motor FVC observer filter time	5 ms to 100 ms	15	ms	Changeable only at stop
BD-03	0xBD03	Asynchronous motor FVC current model mode	0 to 1	0	-	Changeable only at stop
BD-04	0xBD04	Asynchronous motor FVC pre-excitation output observation angle mode	0 to 1	0	-	Changeable only at stop
BD-05	0xBD05	Asynchronous motor SVC model switchover frequency	10% to 20%	15	%	Changeable only at stop
BD-06	0xBD06	Asynchronous motor SVC observer filter time	5 ms to 50 ms	10	ms	Changeable at any time
BD-07	0xBD07	Asynchronous motor SVC observer gain 1	10% to 500%	100	%	Changeable at any time
BD-08	0xBD08	Asynchronous motor SVC observer gain 2	10% to 100%	20	%	Changeable at any time
BD-09	0xBD09	Asynchronous motor SVC observer mode	0 to 3	0	-	Changeable only at stop
BD-10	0xBD0A	Asynchronous motor SVC pre-excitation mode	0 to 1	0	-	Changeable only at stop
BD-11	0xBD0B	Asynchronous motor SVC speed tracking mode	0 to 1	0	-	Changeable only at stop
BD-14	0xBD0E	Synchronous motor 1 model control	Bit00: Low speed processing Bit01: Low speed processing 1 Bit02: Online auto-tuning of resistance Bit03: Online auto-tuning of back EMF Bit04: KS	5	-	Changeable at any time
BD-15	0xBD0F	Synchronous motor model K1	10 to 3000	200	-	Changeable at any time
BD-16	0xBD10	Synchronous motor model K1Max	100 to 6000	3000	-	Changeable at any time
BD-17	0xBD11	Synchronous motor model KsMin	0.0 to 4.0	0.3	-	Changeable at any time
BD-18	0xBD12	Synchronous motor model Kspeed	50 to 2000	400	-	Changeable at any time

Para.	Comm. Addr.	Name	Reference	De fault	Unit	Change
BD-19	0xBD13	Synchronous motor frequency filter time constant	2 ms to 100 ms	10	ms	Changeable at any time
BD-20	0xBD14	Frequency upper limit of synchronous motor Rs online auto-tuning	1.0% to 20.0%	3.5	%	Changeable at any time
BD-21	0xBD15	Synchronous motor model Kr	0 to 50	10	-	Changeable at any time
BD-22	0xBD16	Synchronous motor model Kr1	0 to 50	5	-	Changeable at any time
BD-23	0xBD17	Synchronous motor low-speed D axis injection current	0% to 100%	20	%	Changeable at any time
BD-24	0xBD18	Synchronous motor model LowFreqTime1	0 to 500	50	-	Changeable at any time
BD-27	0xBD1B	Frequency lower limit of back EMF online auto-tuning	10% to 100%	25	%	Changeable at any time
BD-28	0xBD1C	Synchronous motor model LowFreq	0.0% to 2.0%	0.3	%	Changeable at any time
BD-29	0xBD1D	Synchronous motor model LowFreqTime	0 to 100	10	-	Changeable at any time
BD-30	0xBD1E	Percentage of pole auto-tuning current	50% to 200%	100	%	Changeable at any time
BD-31	0xBD1F	Percentage of high frequency response current	0% to 100%	25	%	Changeable at any time
BD-32	0xBD20	Percentage of HFI and SVC switching frequency	0% to 30%	10	%	Changeable at any time
BD-33	0xBD21	Observer parameter	10 to 200	100	-	Changeable at any time
BD-34	0xBD22	Speed filter cut-off frequency	1 Hz to 200 Hz	10	Hz	Changeable at any time
BD-35	0xBD23	Carrier frequency during NS auto-tuning	2.00 Hz to 16.00 Hz	8.00	Hz	Changeable at any time
BD-36	0xBD24	Automatic calculation of NS auto-tuning voltage	0: Disabled 1: Enabled	1	-	Changeable at any time

Para.	Comm. Addr.	Name	Reference	De fault	Unit	Change
BD-37	0xBD25	Percentage of NS auto-tuning voltage set manually	0% to 100%	10	%	Changeable at any time
BD-38	0xBD26	Duration of HFI stage 1	50 ms to 500 ms	150	ms	Changeable at any time
BD-40	0xBD28	Speed loop proportional gain 1	1 to 100	30	-	Changeable at any time
BD-41	0xBD29	Speed loop integral time 1	0.01s to 10.00s	0.50	s	Changeable at any time
BD-42	0xBD2A	Switchover frequency 1	0.00 Hz to BD-45	5.00	Hz	Changeable at any time
BD-43	0xBD2B	Speed loop proportional gain 2	1 to 100	20	-	Changeable at any time
BD-44	0xBD2C	Speed loop integral time 2	0.01s to 10.00s	1.00	s	Changeable at any time
BD-45	0xBD2D	Switchover frequency 2	BD-42 to F0-10	10.00	Hz	Changeable at any time
BD-46	0xBD2E	Vector control slip gain	50% to 200%	100	%	Changeable at any time
BD-47	0xBD2F	Speed feedback filter time in SVC mode	0.000s to 0.100s	0.015	s	Changeable at any time
BD-49	0xBD31	Torque upper limit source in speed control mode (motoring)	0: Digital setting (F2-10) 1: AI1 2: AI2 3: AI3 4: Pulse reference 5: Communication 6: MIN (AI1, AI2) 7: MAX (AI1, AI2) Others: F connector	0	-	Changeable at any time
BD-50	0xBD32	Torque upper limit in speed control mode	0.0% to 200.0%	150.0	%	Changeable at any time
BD-51	0xBD33	Torque upper limit source in speed control mode (generating)	0: Digital setting (F2-10) 1: AI1 2: AI2 3: AI3 4: Pulse reference (DI5) 5: Communication 6: MIN (AI1, AI2) 7: MAX (AI1, AI2) 8: Digital setting (F2-12) Others: F connector	0	-	Changeable at any time

Para.	Comm. Addr.	Name	Reference	De fault	Unit	Change
BD-52	0xBD34	Torque upper limit in speed control mode (generating)	0.0% to 200.0%	150.0	%	Changeable at any time
BD-53	0xBD35	Field weakening mode	0: No field weakening 1: Auto adjustment 2: Calculation+Auto adjustment	1	-	Changeable only at stop
BD-54	0xBD36	Field weakening gain	1 to 50	5	-	Changeable at any time
BD-57	0xBD39	Generating power limiting	0: Disabled 1: Enabled in the whole process 2: Enabled at constant speed 3: Enabled during deceleration	0	-	Changeable at any time
BD-58	0xBD3A	Generating power upper limit	0.0% to 200.0%	20.0	%	Changeable at any time
BD-59	0xBD3B	Motor 3 control mode	0: SVC 1: FVC 2: V/f	2	-	Changeable only at stop
BD-60	0xBD3C	Initial position angle detection current of synchronous motor	50 to 180	80	-	Changeable only at stop
BD-61	0xBD3D	Initial position angle detection of synchronous motor	0: Detected upon running 1: Not detected 2: Detected upon initial running after power-on	0	-	Changeable at any time
BD-63	0xBD3F	Salient pole rate adjustment gain of synchronous motor	0.20 to 3.00	1.00	-	Changeable at any time
BD-64	0xBD40	Maximum torque-to-current ratio control of synchronous motor	0: Disabled 1: Enabled	1	-	Changeable at any time
BD-65	0xBD41	Z signal correction	0: Disabled 1: Enabled	1	-	Changeable at any time
BD-67	0xBD43	Low speed carrier frequency	0.8 kHz to F0-15	2.0	kHz	Changeable at any time
BD-68	0xBD44	Position lock	0 to 1	0	-	Changeable at any time
BD-69	0xBD45	Switchover frequency	0.00 Hz to BD-42	0.30	Hz	Changeable at any time
BD-70	0xBD46	Position lock speed loop proportional gain	1 to 100	10	-	Changeable at any time
BD-71	0xBD47	Position lock speed loop integral time	0.01s to 10.00s	0.50	s	Changeable at any time

Para.	Comm. Addr.	Name	Reference	De fault	Unit	Change
BD-74	0xBD4A	Auto-tuning free mode	0: Disabled 1: Auto-tuning upon initial running after power-on 2: Auto-tuning upon running	0	-	Changeable at any time
BD-76	0xBD4C	Initial position compensation angle	0.0 to 359.9	0.0	-	Changeable at any time
BD-80	0xBD50	Speed loop command word	Bit00: Speed loop 0: Disabled 1: Enabled Bit01: Integration mode 0: Conventional integration 1: Position integration Bit02: Acceleration torque 0: Disabled 1: Enabled Bit03–Bit04: Acceleration source 0: Function transfer torque 1: Automatic calculation 2: Function transfer acceleration Bit05: Anti-load disturbance 0: Disabled 1: Enabled	11	-	Changeable at any time
BD-81	0xBD51	Locked-rotor fast integral cancel coefficient	0.0% to +100.0%	0.0	%	Changeable at any time
BD-82	0xBD52	Integral torque	–100% to +100.0%	0.0	%	Changeable at any time
BD-83	0xBD53	Speed controller frequency window size	0.00 Hz to 10.00 Hz	0.00	Hz	Changeable only at stop
BD-84	0xBD54	Current filter time for torque reference	0.0 ms to 100.0 ms	0.0	ms	Changeable only at stop
BD-85	0xBD55	Acceleration torque	0: Inactive 1: AI1 2: AI2 3: AI3 4: Pulse reference 5: Communication 6: Multi-reference 7: Motor-driven potentiometer 8: PID Others: F connector	0	-	Changeable at any time
BD-87	0xBD57	Reference model bandwidth	0.00 Hz to 300.00 Hz	0.00	Hz	Changeable at any time
BD-88	0xBD58	Torque feedforward coefficient	0.0% to 1000.0%	100.0	%	Changeable at any time

Para.	Comm. Addr.	Name	Reference	De fault	Unit	Change
BD-89	0xBD59	Vector control reference frequency filter time	0.0 ms to 100.0 ms	0.0	ms	Changeable only at stop
BD-90	0xBD5A	Vector control feedback frequency filter time	0.0 ms to 100.0 ms	0.0	ms	Changeable only at stop
BD-91	0xBD5B	Load observation bandwidth	0.00 Hz to 300.00 Hz	0.00	Hz	Changeable at any time
BD-92	0xBD5C	Load observation coefficient	0.0% to 1000.0%	100.0	%	Changeable at any time
BD-93	0xBD5D	Pseudo integral coefficient	0.000 to 10.000	1.000	-	Changeable at any time
BD-94	0xBD5E	Torque coefficient enable	0: Disabled 1: Enabled	0	-	Changeable at any time
BD-96	0xBD60	Center frequency of notch filter 1	0.0 to 4000.0	4000.0	-	Changeable at any time
BD-97	0xBD61	Center frequency of notch filter 2	0.0 to 4000.0	4000.0	-	Changeable at any time
BD-98	0xBD62	Integral setting control word	0: Disabled 1: Enabled Others: B connector	0	-	Changeable at any time
BD-99	0xBD63	Integral reference source	0: Digital setting 1: AI1 2: AI2 3: AI3 4: Pulse reference 5: Communication 6: Multi-reference 7: Motor-driven potentiometer 8: PID Others: F connector	0	-	Changeable at any time
BE-00	0xBE00	Externally transferred acceleration	0: Inactive 1: AI1 2: AI2 3: AI3 4: Pulse reference 5: Communication 6: Multi-reference 7: Motor-driven potentiometer 8: PID Others: F connector	0	-	Changeable at any time
BE-03	0xBE03	Overturning torque limiting coefficient	0.0% to 400.0%	100.0	%	Changeable at any time
BE-04	0xBE04	Motoring power limiting coefficient	0.0% to 400.0%	400.0	%	Changeable at any time

Para.	Comm. Addr.	Name	Reference	De fault	Unit	Change
BE-05	0xBE05	Generating power limiting coefficient	0.0% to 400.0%	400.0	%	Changeable at any time
BE-06	0xBE06	Overspeed limiting enable	0 to 1	1	-	Changeable at any time
BE-07	0xBE07	Sine wave frequency of bandwidth test	0 Hz to 1000 Hz	0	Hz	Changeable at any time
BE-08	0xBE08	Sine wave amplitude of bandwidth test	0% to 100%	0	%	Changeable at any time
BE-09	0xBE09	Bandwidth test enable	0 to 4	0	-	Changeable at any time
BE-11	0xBE0B	Speed loop parameter calculation mode	0: New solution 1: Compatible solution	1	-	Changeable only at stop
BE-12	0xBE0C	Speed loop proportional gain in FVC mode	0.00 Hz to 100.00 Hz	8.00	Hz	Changeable at any time
BE-13	0xBE0D	Speed loop integral time in FVC mode	0.000s to 20.000s	0.080	s	Changeable at any time
BE-14	0xBE0E	Speed loop proportional gain in SVC mode	0.00 Hz to 100.00 Hz	5.00	Hz	Changeable at any time
BE-15	0xBE0F	Speed loop integral time in SVC mode	0.000s to 20.000s	0.127	s	Changeable at any time
BE-16	0xBE10	Low frequency proportional correction coefficient	0.0% to 1000.0%	100.0	%	Changeable at any time
BE-17	0xBE11	Low frequency integral correction coefficient	0.0% to 1000.0%	100.0	%	Changeable at any time
BE-18	0xBE12	Speed loop adaption factor	0.000 to 10.000	0.200	-	Changeable at any time
BE-19	0xBE13	Speed loop adaption switchover lower limit	0.000 to 10.000	0.400	-	Changeable at any time
BE-20	0xBE14	Speed loop adaption switchover upper limit	0.000 to 10.000	1.000	-	Changeable at any time
BE-21	0xBE15	Speed loop adaption correction upper limit	0.0% to 1000.0%	100.0	%	Changeable at any time

Para.	Comm. Addr.	Name	Reference	De fault	Unit	Change
BE-22	0xBE16	Speed loop adaption correction lower limit	0.0% to 1000.0%	100.0	%	Changeable at any time
BE-23	0xBE17	Flux adaptation enable	0 to 1	0	-	Changeable at any time
BE-24	0xBE18	Overspeed controller correction coefficient	0.0% to 1000.0%	100.0	%	Changeable at any time
BE-25	0xBE19	VDC control command word	Bit00: VdcMin 0: Disabled 1: Enabled Bit01: VdcMax 0: Disabled 1: Enabled Bit02: Automatic calculation of VDC trigger voltage 0: Disabled 1: Enabled Bit03: VDC control integral action 0: Disabled 1: Enabled	0	-	Changeable at any time
BE-26	0xBE1A	Bus capacitance ratio	50.0% to 1000.0%	100.0	%	Changeable at any time
BE-27	0xBE1B	Undervoltage suppression exit hysteresis frequency	0.00 Hz to 10.00 Hz	3.00	Hz	Changeable at any time
BE-28	0xBE1C	Minimum VDC failure speed threshold	0.00 Hz to 20.00 Hz	2.00	Hz	Changeable at any time
BE-29	0xBE1D	Dynamic adjustment coefficient	0.0% to 1000.0%	100.0	%	Changeable at any time
BE-30	0xBE1E	Minimum VDC activation voltage	320.0 V to 540.0 V	430.0	V	Changeable at any time
BE-31	0xBE1F	Maximum VDC activation voltage	650.0 V to 800.0 V	770.0	V	Changeable at any time

Para.	Comm. Addr.	Name	Reference	De fault	Unit	Change
BE-32	0xBE20	Flux linkage control command word	Bit00: Output voltage limit calculation filtering mode 0: Symmetric filtering 1: Asymmetric filtering Bit01: Asynchronous motor inverse proportion curve calculation 0: The inverse proportional synchronization frequency decreases. 1: The inverse proportional speed decreases. Bit02: Flux linkage feedforward calculation by using inverse proportional speed 0: Disabled 1: Enabled Bit03: Reserved Bit04: Reserved Bit05: Field weakening adjustment 0: Disabled 1: Enabled Bit06: Flux linkage derivative feedforward 0: Disabled 1: Enabled Bit07: Energy conservation control 0: Disabled 1: Enabled Bit08: Asynchronous motor flux closed loop 0: Disabled 1: Enabled Bit09: Reserved Bit10: Reserved Bit11: Asynchronous motor pre-excitation mode 0: Pre-excitation based on time 1: Pre-excitation based on current Bit12: Asynchronous motor pre-excitation current 0: Reference current 1: Maximum current allowed by the drive	2357	-	Changeable at any time
BE-33	0xBE21	Output voltage upper limit margin for field weakening adjustment	1% to 50%	5	%	Changeable at any time
BE-34	0xBE22	Output voltage upper limit margin for auto adjustment of field weakening	1% to 20%	3	%	Changeable at any time
BE-35	0xBE23	Filter time for calculating maximum output voltage	0 ms to 3000 ms	30	ms	Changeable at any time

Para.	Comm. Addr.	Name	Reference	De fault	Unit	Change
BE-36	0xBE24	Rated flux adjustment coefficient for calculation	0.5 to 2.0	1.0	-	Changeable at any time
BE-37	0xBE25	Field weakening frequency adjustment coefficient for calculation	0.8 to 1.2	1.0	-	Changeable at any time
BE-38	0xBE26	Slip filter time for calculating field weakening frequency	0 ms to 3000 ms	62	ms	Changeable at any time
BE-39	0xBE27	Feedback speed filtering	0 ms to 8000 ms	50	ms	Changeable at any time
BE-40	0xBE28	Flux linkage rising filter time	0 ms to 8000 ms	20	ms	Changeable at any time
BE-42	0xBE2A	Feedback voltage filter time	0 ms to 3000 ms	5	ms	Changeable at any time
BE-43	0xBE2B	Maximum demagnetization current of synchronous motor	0% to 500%	300	%	Changeable at any time
BE-44	0xBE2C	Voltage outer loop lower limit coefficient	0 to 500	50	-	Changeable at any time
BE-45	0xBE2D	Flux linkage derivative feedforward coefficient	0.0 to 1.5	1.0	-	Changeable at any time
BE-46	0xBE2E	Flux linkage derivative feedforward filter time	0 ms to 3000 ms	6	ms	Changeable at any time
BE-47	0xBE2F	Torque current rising filter time under energy conservation control	0 ms to 3000 ms	50	ms	Changeable at any time
BE-48	0xBE30	Torque current falling filter time under energy conservation control	0 ms to 3000 ms	100	ms	Changeable at any time

Para.	Comm. Addr.	Name	Reference	De fault	Unit	Change
BE-49	0xBE31	Flux linkage lower limit coefficient under energy conservation control	0.00 to 0.50	0.10	-	Changeable at any time
BE-51	0xBE33	Pre-excitation current	1% to 200%	100	%	Changeable at any time
BE-52	0xBE34	Pre-excitation time	1 ms to 30000 ms	1000	ms	Changeable at any time
BE-53	0xBE35	Flux linkage closed-loop bandwidth frequency	0.0 Hz to 100.0 Hz	2.0	Hz	Changeable at any time
BE-54	0xBE36	Feedback flux linkage filter time coefficient	0 to 200	4	-	Changeable at any time
BE-55	0xBE37	Static output flux linkage filter time	0 ms to 5000 ms	10	ms	Changeable at any time
BE-56	0xBE38	Current loop mode	0: ImCsr2 mode 1: Complex vector mode 2: 880 mode 3: No field weakening	1	-	Changeable only at stop
BE-57	0xBE39	PI regulator proportional gain adaptation with load	0: Disabled 1: Enabled	0	-	Changeable only at stop
BE-58	0xBE3A	Current loop damping	0.2 to 5.0	0.8	-	Changeable at any time
BE-59	0xBE3B	Low-speed current loop Kp adjustment	0.1 to 10.0	1.0	-	Changeable at any time
BE-60	0xBE3C	High-speed current loop Kp adjustment	0.1 to 10.0	1.0	-	Changeable at any time
BE-61	0xBE3D	Low-speed current loop Ki adjustment	0.1 to 10.0	1.0	-	Changeable at any time
BE-62	0xBE3E	High-speed current loop Ki adjustment	0.1 to 10.0	2.0	-	Changeable at any time
BE-63	0xBE3F	D-axis current loop complex vector adjustment	0.1 to 10.0	1.0	-	Changeable at any time
BE-64	0xBE40	Q-axis current loop complex vector adjustment	0.1 to 10.0	1.0	-	Changeable at any time

Para.	Comm. Addr.	Name	Reference	De fault	Unit	Change
BE-65	0xBE41	Complex vector hysteresis frequency lower limit as a percentage of rated frequency	0% to BE-66	0	%	Changeable at any time
BE-66	0xBE42	Complex vector hysteresis frequency upper limit as a percentage of rated frequency	BE-65 to 150%	0	%	Changeable at any time
BE-67	0xBE43	ImCsr2 hysteresis switchover voltage upper limit as a percentage of saturation voltage	BE-68 to 95%	89	%	Changeable at any time
BE-68	0xBE44	ImCsr2 hysteresis switchover voltage lower limit as a percentage of saturation voltage	60% to BE-67	79	%	Changeable at any time
BE-69	0xBE45	ImCsr2 hysteresis switchover frequency hysteresis range as a percentage of rated frequency	1% to 30%	10	%	Changeable at any time
BE-70	0xBE46	ImCsr2 hysteresis switchover frequency lower limit (below which the hysteresis condition does not take effect) as a percentage of the rated frequency	40% to 80%	60	%	Changeable at any time
BE-71	0xBE47	ImCsr2 current loop Kss adjustment	0.1 to 10.0	1.0	-	Changeable at any time
BE-72	0xBE48	Proportional gain adjustment coefficient corresponding to the maximum torque when proportional gain is adjusted with load	0.1 to 1.0	0.5	-	Changeable at any time

Para.	Comm. Addr.	Name	Reference	De fault	Unit	Change
BE-73	0xBE49	Torque upper limit setpoint as a percentage of rated torque when proportional gain is adjusted with load	BE-74 to 300%	200	%	Changeable at any time
BE-74	0xBE4A	Torque lower limit setpoint as a percentage of rated torque when proportional gain is adjusted with load	0.0% to BE-73	100	%	Changeable at any time
BE-75	0xBE4B	Derivative feedforward adjustment	0.0 to 1.0	0.0	-	Changeable at any time
BE-76	0xBE4C	Decoupling control start frequency as a percentage of rated frequency	20% to 150%	40	%	Changeable at any time
BE-77	0xBE4D	Decoupling control filter time adjustment coefficient	0.1 to 3.0	1.0	-	Changeable at any time
BE-78	0xBE4E	Decoupling control output adjustment coefficient	0.0 to 1.0	1.0	-	Changeable at any time
BE-79	0xBE4F	CPC feedforward enable	0: Disabled 1: Enabled	0	-	Changeable at any time
BE-80	0xBE50	Current loop auxiliary command word	Bit00: Complex vector angle limiting 0: Disabled 1: Enabled Bit01: Voltage angle limiting 0: Program internal limiting 1: Parameter setting Bit02: 0 by default 0: No lower limit on the excitation current is imposed during the dynamic process. 1: A lower limit on the excitation current is imposed during the dynamic process in ImCsr2 mode. Bit03–Bit15: Reserved (0 by default)	0	-	Changeable at any time
BE-81	0xBE51	Voltage angle upper limit	90° to 180°	150	°	Changeable at any time
BE-82	0xBE52	Voltage angle lower limit	0° to 90°	30	°	Changeable at any time

Para.	Comm. Addr.	Name	Reference	De fault	Unit	Change
BE-83	0xBE53	Asynchronous motor D axis integral limit	0.500 to 1.000	0.707	-	Changeable at any time
BE-84	0xBE54	Current loop carrier frequency upper limit	5.0 to 16.0	8.0	-	Changeable at any time
BE-85	0xBE55	Droop enable	0 to 1	0	-	Changeable only at stop
BE-86	0xBE56	Droop source	0: Line current 1: Torque reference 2: Speed adjustment output 3: Speed adjustment integral component	1	-	Changeable only at stop
BE-87	0xBE57	Frequency reference droop coefficient	0.0% to 50.0%	0.0	%	Changeable at any time
BE-88	0xBE58	FVC-SVC switchover mode	0: No switchover 1: Active switchover 2: Passive switchover (The AC drive switches to SVC mode upon detection of encoder wire breakage, and it switches back to FVC mode when the encoder recovers during stop and does not switch back to FVC mode when the encoder recovers during running.) 3: Passive switchover (The AC drive switches to SVC mode upon detection of encoder wire breakage, and it switches back to FVC mode when the encoder recovers during running or stop.)	0	-	Changeable only at stop
BE-89	0xBE59	FVC-SVC switchover frequency	10% to 500%	50	%	Changeable only at stop
BE-90	0xBE5A	FVC-SVC switchover hysteresis	10% to 100%	10	%	Changeable only at stop
BF-00	0xBF00	Minimum speed measurement interval of resolver	0.010s to 10.000s	0.450	s	Changeable only at stop
BF-01	0xBF01	Dynamic parameter adaption factor	20.0% to 200.0%	100.0	%	Changeable only at stop
BF-02	0xBF02	Saturation model auto-tuning voltage setting mode	0 to 1	1	-	Changeable at any time
BF-03	0xBF03	Reserved 2 saturation model auto-tuning carrier frequency reference	0.0 to 10.0	6.0	-	Changeable at any time

Para.	Comm. Addr.	Name	Reference	De fault	Unit	Change
BF-04	0xBF04	Saturation model auto-tuning target rated current multiple	0% to 250%	200	%	Changeable at any time
BF-05	0xBF05	Saturation model auto-tuning manual voltage setpoint	0 to 4096	2000	-	Changeable at any time
BF-06	0xBF06	Bus voltage filter time	0 ms to 10000 ms	0	ms	Changeable at any time
BF-07	0xBF07	Inverter protection	Bit00: Pulse-by-pulse current limit protection (reserved) 0: Disabled 1: Enabled Bit01: Output phase loss (reserved) 0: Disabled 1: Enabled Bit02: Leakage current protection (reserved) 0: Disabled 1: Enabled Bit03: PL signal input phase loss detection (reserved) 0: Disabled 1: Enabled Bit04: Bus input phase loss detection (reserved) 0: Disabled 1: Enabled Bit05: Derating at low frequency 0: Disabled 1: Enabled Bit06: Reporting overvoltage upon shutdown 0: Enabled 1: Disabled Bit07: Zero drift detection fault 0: Disabled 1: Enabled Bit08: Pre-charge fault detection (reserved) 0: Disabled 1: Enabled Bit09: Bus voltage collection and analysis 0: Disabled 1: Enabled	128	-	Changeable at any time
BF-09	0xBF09	AC drive pre-overload threshold	0.0% to +100.0%	90.0	%	Changeable at any time
BF-12	0xBF0C	Input phase loss detection time	1.0s to 10.0s	2.0	s	Changeable at any time
BF-13	0xBF0D	Allowable bus fluctuation range	10.0 V to 500.0 V	65.0	V	Changeable at any time

Para.	Comm. Addr.	Name	Reference	De fault	Unit	Change
BF-14	0xBF0E	Module pre-overtemperature to overtemperature margin	0.0% to 60.0%	5.0	%	Changeable at any time
BF-15	0xBF0F	Maximum output current	0.0% to 1000.0%	1000.0	%	Changeable at any time
BF-16	0xBF10	PWM setting	Bit00: Carrier frequency adjusted with temperature 0: Disabled 1: Enabled Bit01: Carrier frequency adjusted with sync frequency 0: Disabled 1: Enabled Bit02–Bit03: 0: Asynchronous modulation 1: Pseudo synchronous modulation 2: Synchronous modulation (reserved) Bit04–Bit06: 0: CPWM 1: DPWM0 2: DPWM1 3: DPWM2 4: DPWM3 5: DPWMph Bit07: Deadzone compensation 0: Disabled 1: Enabled Bit08: Overmodulation mode 0: Amplitude 1: Phase	130	-	Changeable at any time
BF-17	0xBF11	Hysteresis for adjusting carrier frequency with sync frequency	0.0 Hz to 100.0 Hz	3.0	Hz	Changeable at any time
BF-18	0xBF12	Cut-off frequency for deadzone compensation	0.0 Hz to 600.0 Hz	70.0	Hz	Changeable at any time
BF-19	0xBF13	Narrow pulse coefficient	0.0% to +100.0%	0.0	%	Changeable at any time
BF-20	0xBF14	Start frequency for adjusting carrier frequency with sync frequency	0.0 Hz to 600.0 Hz	5.0	Hz	Changeable at any time
BF-21	0xBF15	Modulation ratio limit	A5-05 to 115.5%	105.0	%	Changeable at any time

Para.	Comm. Addr.	Name	Reference	De fault	Unit	Change
BF-22	0xBF16	Drive transistor voltage drop voltage	0.00 V to 5.00 V	0.80	V	Changeable only at stop
BF-23	0xBF17	Current 1 of deadzone time curve	0.0% to 150.0%	1.0	%	Changeable only at stop
BF-24	0xBF18	Current 2 of deadzone time curve	0.0% to 150.0%	2.0	%	Changeable only at stop
BF-25	0xBF19	Current 3 of deadzone time curve	0.0% to 150.0%	5.0	%	Changeable only at stop
BF-26	0xBF1A	Current 4 of deadzone time curve	0.0% to 150.0%	10.0	%	Changeable only at stop
BF-27	0xBF1B	Current 5 of deadzone time curve	0.0% to 150.0%	20.0	%	Changeable only at stop
BF-28	0xBF1C	Current 6 of deadzone time curve	0.0% to 150.0%	40.0	%	Changeable only at stop
BF-29	0xBF1D	Current 7 of deadzone time curve	0.0% to 150.0%	60.0	%	Changeable only at stop
BF-30	0xBF1E	Current 8 of deadzone time curve	0.0% to 150.0%	80.0	%	Changeable only at stop
BF-31	0xBF1F	Time 1 of deadzone time curve	0.0% to 300.0%	10.0	%	Changeable only at stop
BF-32	0xBF20	Time 2 of deadzone time curve	0.0% to 300.0%	20.0	%	Changeable only at stop
BF-33	0xBF21	Time 3 of deadzone time curve	0.0% to 300.0%	50.0	%	Changeable only at stop
BF-34	0xBF22	Time 4 of deadzone time curve	0.0% to 300.0%	80.0	%	Changeable only at stop
BF-35	0xBF23	Time 5 of deadzone time curve	0.0% to 300.0%	90.0	%	Changeable only at stop
BF-36	0xBF24	Time 6 of deadzone time curve	0.0% to 300.0%	90.0	%	Changeable only at stop
BF-37	0xBF25	Time 7 of deadzone time curve	0.0% to 300.0%	90.0	%	Changeable only at stop
BF-38	0xBF26	Time 8 of deadzone time curve	0.0% to 300.0%	90.0	%	Changeable only at stop
BF-39	0xBF27	Detection of excessive leakage current	0: Disabled 1: Enabled	0	-	Changeable only at stop

Para.	Comm. Addr.	Name	Reference	De fault	Unit	Change
BF-40	0xBF28	Excessive leakage current fault threshold protection gain	50.0% to 100.0%	100.0	%	Changeable at any time
BF-44	0xBF2C	Start voltage for actuating braking unit	200.0 V to 2000.0 V	760.0	V	Changeable at any time
BF-45	0xBF2D	Load loss detection level	0.0% to +100.0%	10.0	%	Changeable at any time
BF-46	0xBF2E	Load loss detection time	0.0s to 60.0s	1.0	s	Changeable at any time
C0-00	0xC000	Communication mapping	0: Disabled 1: Enabled	0	-	Changeable at any time
C0-01	0xC001	Automatic address detection	0: Disabled 1: Reset detection (overwriting the index) 2: Incremental detection (without overwriting the index)	0	-	Changeable at any time
C0-02	0xC002	Automatic address detection time	0s to 65535s	60	s	Changeable at any time
C0-03	0xC003	Confirmation of automatic address detection	0: Cancel 1: Confirm	0	-	Changeable at any time
C0-04	0xC004	Data transmission endian mode	Ones: RX data 0: Low-order bytes before high-order bytes 1: High-order bytes before low-order bytes	0	-	Changeable at any time

Para.	Comm. Addr.	Name	Reference	De fault	Unit	Change
C0-05	0xC005	Read data type selection 1	Ones: Read index 1 0: UInt16 1: Int16 2: UInt32 3: Int32 4: Unsigned Float32 5: Signed Float32 Tens: Read index 2 0: UInt16 1: Int16 2: UInt32 3: Int32 4: Unsigned Float32 5: Signed Float32 Hundreds: Read index 3 0: UInt16 1: Int16 2: UInt32 3: Int32 4: Unsigned Float32 5: Signed Float32 Thousands: Read index 4 0: UInt16 1: Int16 2: UInt32 3: Int32 4: Unsigned Float32 5: Signed Float32 Ten thousands: Read index 5 0: UInt16 1: Int16 2: UInt32 3: Int32 4: Unsigned Float32 5: Signed Float32	0	-	Changeable at any time

Para.	Comm. Addr.	Name	Reference	Default	Unit	Change
C0-06	0xC006	Read data type selection 2	Ones: Read index 6 0: UInt16 1: Int16 2: UInt32 3: Int32 4: Unsigned Float32 5: Signed Float32 Tens: Read index 7 0: UInt16 1: Int16 2: UInt32 3: Int32 4: Unsigned Float32 5: Signed Float32 Hundreds: Read index 8 0: UInt16 1: Int16 2: UInt32 3: Int32 4: Unsigned Float32 5: Signed Float32 Thousands: Read index 9 0: UInt16 1: Int16 2: UInt32 3: Int32 4: Unsigned Float32 5: Signed Float32 Ten thousands: Read index 10 0: UInt16 1: Int16 2: UInt32 3: Int32 4: Unsigned Float32 5: Signed Float32	0	-	Changeable at any time

Para.	Comm. Addr.	Name	Reference	De fault	Unit	Change
C0-07	0xC007	Read data scale factor selection 1	Ones: Read index 1 0: x1 1: x0.1 2: x0.01 3: x0.001 4: x10 5: x100 6: x1000 7: x0.0001 8: x10000 Tens: Read index 2 0: x1 1: x0.1 2: x0.01 3: x0.001 4: x10 5: x100 6: x1000 7: x0.0001 8: x10000 Hundreds: Read index 3 0: x1 1: x0.1 2: x0.01 3: x0.001 4: x10 5: x100 6: x1000 7: x0.0001 8: x10000 Thousands: Read index 4 0: x1 1: x0.1 2: x0.01 3: x0.001 4: x10 5: x100 6: x1000 7: x0.0001 8: x10000 Ten thousands: Read index 5 0: x1 1: x0.1 2: x0.01 3: x0.001 4: x10 5: x100	0	-	Changeable at any time

Para.	Comm. Addr.	Name	Reference	De fault	Unit	Change
C0-08	0xC008	Read data scale factor selection 2	Ones: Read index 6 0: x1 1: x0.1 2: x0.01 3: x0.001 4: x10 5: x100 6: x1000 7: x0.0001 8: x10000 Tens: Read index 7 0: x1 1: x0.1 2: x0.01 3: x0.001 4: x10 5: x100 6: x1000 7: x0.0001 8: x10000 Hundreds: Read index 8 0: x1 1: x0.1 2: x0.01 3: x0.001 4: x10 5: x100 6: x1000 7: x0.0001 8: x10000 Thousands: Read index 9 0: x1 1: x0.1 2: x0.01 3: x0.001 4: x10 5: x100 6: x1000 7: x0.0001 8: x10000 Ten thousands: Read index 10 0: x1 1: x0.1 2: x0.01 3: x0.001 4: x10 5: x100	0	-	Changeable at any time
C0-09	0xC009	Write data type	0x0 to 0xFFFF	0x0	-	Changeable at any time

Para.	Comm. Addr.	Name	Reference	De fault	Unit	Change
C0-10	0xC00A	Address mapping status	0x0 to 0xFFFF	0x0	-	Changeable at any time
C0-18	0xC012	Number of read mapping addresses	0 to 10	10	-	Changeable at any time
C0-19	0xC013	Number of write mapping addresses	0 to 10	10	-	Changeable at any time
C0-20	0xC014	Read index 1	0x0 to 0xFFFF	0x0	-	Changeable at any time
C0-21	0xC015	Read subindex 1	0x0 to 0xFFFF	0x0	-	Changeable at any time
C0-22	0xC016	Read mapping internal address index 1	0x0 to 0xFFFF	0x0	-	Changeable at any time
C0-23	0xC017	Read mapping internal address subindex 1	0x0 to 0xFFFF	0x0	-	Changeable at any time
C0-24	0xC018	Read index 2	0x0 to 0xFFFF	0x0	-	Changeable at any time
C0-25	0xC019	Read subindex 2	0x0 to 0xFFFF	0x0	-	Changeable at any time
C0-26	0xC01A	Read mapping internal address index 2	0x0 to 0xFFFF	0x0	-	Changeable at any time
C0-27	0xC01B	Read mapping internal address subindex 2	0x0 to 0xFFFF	0x0	-	Changeable at any time
C0-28	0xC01C	Read index 3	0x0 to 0xFFFF	0x0	-	Changeable at any time
C0-29	0xC01D	Read subindex 3	0x0 to 0xFFFF	0x0	-	Changeable at any time
C0-30	0xC01E	Read mapping internal address index 3	0x0 to 0xFFFF	0x0	-	Changeable at any time
C0-31	0xC01F	Read mapping internal address subindex 3	0x0 to 0xFFFF	0x0	-	Changeable at any time
C0-32	0xC020	Read index 4	0x0 to 0xFFFF	0x0	-	Changeable at any time
C0-33	0xC021	Read subindex 4	0x0 to 0xFFFF	0x0	-	Changeable at any time
C0-34	0xC022	Read mapping internal address index 4	0x0 to 0xFFFF	0x0	-	Changeable at any time
C0-35	0xC023	Read mapping internal address subindex 4	0x0 to 0xFFFF	0x0	-	Changeable at any time

Para.	Comm. Addr.	Name	Reference	De fault	Unit	Change
C0-36	0xC024	Read index 5	0x0 to 0xFFFF	0x0	-	Changeable at any time
C0-37	0xC025	Read subindex 5	0x0 to 0xFFFF	0x0	-	Changeable at any time
C0-38	0xC026	Read mapping internal address index 5	0x0 to 0xFFFF	0x0	-	Changeable at any time
C0-39	0xC027	Read mapping internal address subindex 5	0x0 to 0xFFFF	0x0	-	Changeable at any time
C0-40	0xC028	Read index 6	0x0 to 0xFFFF	0x0	-	Changeable at any time
C0-41	0xC029	Read subindex 6	0x0 to 0xFFFF	0x0	-	Changeable at any time
C0-42	0xC02A	Read mapping internal address index 6	0x0 to 0xFFFF	0x0	-	Changeable at any time
C0-43	0xC02B	Read mapping internal address subindex 6	0x0 to 0xFFFF	0x0	-	Changeable at any time
C0-44	0xC02C	Read index 7	0x0 to 0xFFFF	0x0	-	Changeable at any time
C0-45	0xC02D	Read subindex 7	0x0 to 0xFFFF	0x0	-	Changeable at any time
C0-46	0xC02E	Read mapping internal address index 7	0x0 to 0xFFFF	0x0	-	Changeable at any time
C0-47	0xC02F	Read mapping internal address subindex 7	0x0 to 0xFFFF	0x0	-	Changeable at any time
C0-48	0xC030	Read index 8	0x0 to 0xFFFF	0x0	-	Changeable at any time
C0-49	0xC031	Read subindex 8	0x0 to 0xFFFF	0x0	-	Changeable at any time
C0-50	0xC032	Read mapping internal address index 8	0x0 to 0xFFFF	0x0	-	Changeable at any time
C0-51	0xC033	Read mapping internal address subindex 8	0x0 to 0xFFFF	0x0	-	Changeable at any time
C0-52	0xC034	Read index 9	0x0 to 0xFFFF	0x0	-	Changeable at any time
C0-53	0xC035	Read subindex 9	0x0 to 0xFFFF	0x0	-	Changeable at any time

Para.	Comm. Addr.	Name	Reference	De fault	Unit	Change
C0-54	0xC036	Read mapping internal address index 9	0x0 to 0xFFFF	0x0	-	Changeable at any time
C0-55	0xC037	Read mapping internal address subindex 9	0x0 to 0xFFFF	0x0	-	Changeable at any time
C0-56	0xC038	Read index 10	0x0 to 0xFFFF	0x0	-	Changeable at any time
C0-57	0xC039	Read subindex 10	0x0 to 0xFFFF	0x0	-	Changeable at any time
C0-58	0xC03A	Read mapping internal address index 10	0x0 to 0xFFFF	0x0	-	Changeable at any time
C0-59	0xC03B	Read mapping internal address subindex 10	0x0 to 0xFFFF	0x0	-	Changeable at any time
C0-60	0xC03C	Write index 1	0x0 to 0xFFFF	0x0	-	Changeable at any time
C0-61	0xC03D	Write subindex 1	0x0 to 0xFFFF	0x0	-	Changeable at any time
C0-62	0xC03E	Write mapping internal address index 1	0x0 to 0xFFFF	0x0	-	Changeable at any time
C0-63	0xC03F	Write mapping internal address subindex 1	0x0 to 0xFFFF	0x0	-	Changeable at any time
C0-64	0xC040	Write index 2	0x0 to 0xFFFF	0x0	-	Changeable at any time
C0-65	0xC041	Write subindex 2	0x0 to 0xFFFF	0x0	-	Changeable at any time
C0-66	0xC042	Write mapping internal address index 2	0x0 to 0xFFFF	0x0	-	Changeable at any time
C0-67	0xC043	Write mapping internal address subindex 2	0x0 to 0xFFFF	0x0	-	Changeable at any time
C0-68	0xC044	Write index 3	0x0 to 0xFFFF	0x0	-	Changeable at any time
C0-69	0xC045	Write subindex 3	0x0 to 0xFFFF	0x0	-	Changeable at any time
C0-70	0xC046	Write mapping internal address index 3	0x0 to 0xFFFF	0x0	-	Changeable at any time
C0-71	0xC047	Write mapping internal address subindex 3	0x0 to 0xFFFF	0x0	-	Changeable at any time

Para.	Comm. Addr.	Name	Reference	De fault	Unit	Change
C0-72	0xC048	Write index 4	0x0 to 0xFFFF	0x0	-	Changeable at any time
C0-73	0xC049	Write subindex 4	0x0 to 0xFFFF	0x0	-	Changeable at any time
C0-74	0xC04A	Write mapping internal address index 4	0x0 to 0xFFFF	0x0	-	Changeable at any time
C0-75	0xC04B	Write mapping internal address subindex 4	0x0 to 0xFFFF	0x0	-	Changeable at any time
C0-76	0xC04C	Write index 5	0x0 to 0xFFFF	0x0	-	Changeable at any time
C0-77	0xC04D	Write subindex 5	0x0 to 0xFFFF	0x0	-	Changeable at any time
C0-78	0xC04E	Write mapping internal address index 5	0x0 to 0xFFFF	0x0	-	Changeable at any time
C0-79	0xC04F	Write mapping internal address subindex 5	0x0 to 0xFFFF	0x0	-	Changeable at any time
C0-80	0xC050	Write index 6	0x0 to 0xFFFF	0x0	-	Changeable at any time
C0-81	0xC051	Write subindex 6	0x0 to 0xFFFF	0x0	-	Changeable at any time
C0-82	0xC052	Write mapping internal address index 6	0x0 to 0xFFFF	0x0	-	Changeable at any time
C0-83	0xC053	Write mapping internal address subindex 6	0x0 to 0xFFFF	0x0	-	Changeable at any time
C0-84	0xC054	Write index 7	0x0 to 0xFFFF	0x0	-	Changeable at any time
C0-85	0xC055	Write subindex 7	0x0 to 0xFFFF	0x0	-	Changeable at any time
C0-86	0xC056	Write mapping internal address index 7	0x0 to 0xFFFF	0x0	-	Changeable at any time
C0-87	0xC057	Write mapping internal address subindex 7	0x0 to 0xFFFF	0x0	-	Changeable at any time
C0-88	0xC058	Write index 8	0x0 to 0xFFFF	0x0	-	Changeable at any time
C0-89	0xC059	Write subindex 8	0x0 to 0xFFFF	0x0	-	Changeable at any time

Para.	Comm. Addr.	Name	Reference	De fault	Unit	Change
C0-90	0xC05A	Write mapping internal address index 8	0x0 to 0xFFFF	0x0	-	Changeable at any time
C0-91	0xC05B	Write mapping internal address subindex 8	0x0 to 0xFFFF	0x0	-	Changeable at any time
C0-92	0xC05C	Write index 9	0x0 to 0xFFFF	0x0	-	Changeable at any time
C0-93	0xC05D	Write subindex 9	0x0 to 0xFFFF	0x0	-	Changeable at any time
C0-94	0xC05E	Write mapping internal address index 9	0x0 to 0xFFFF	0x0	-	Changeable at any time
C0-95	0xC05F	Write mapping internal address subindex 9	0x0 to 0xFFFF	0x0	-	Changeable at any time
C0-96	0xC060	Write index 10	0x0 to 0xFFFF	0x0	-	Changeable at any time
C0-97	0xC061	Write subindex 10	0x0 to 0xFFFF	0x0	-	Changeable at any time
C0-98	0xC062	Write mapping internal address index 10	0x0 to 0xFFFF	0x0	-	Changeable at any time
C0-99	0xC063	Write mapping internal address subindex 10	0x0 to 0xFFFF	0x0	-	Changeable at any time
C1-00	0xC100	Input of W2B module A	0: 0 Others: K connector	0	-	Changeable at any time
C1-01	0xC101	Input of W2B module B	Same as C1-00	0	-	Changeable at any time
C1-02	0xC102	Input of W2B module C	Same as C1-00	0	-	Changeable at any time
C1-03	0xC103	Input of W2B module D	Same as C1-00	0	-	Changeable at any time
C1-04	0xC104	Input of W2B module E	Same as C1-00	0	-	Changeable at any time
C1-05	0xC105	Input of W2B module F	Same as C1-00	0	-	Changeable at any time
C1-06	0xC106	Input of W2B module G	Same as C1-00	0	-	Changeable at any time
C1-07	0xC107	Input of W2B module H	Same as C1-00	0	-	Changeable at any time
C1-12	0xC10C	B2W module A enable	0: Disabled 1: Enabled	0	-	Changeable at any time

Para.	Comm. Addr.	Name	Reference	De fault	Unit	Change
C1-13	0xC10D	Bit inversion flag of B2W module A	0 to 65535	0	-	Changeable at any time
C1-14	0xC10E	B2W module A - Bit00	0: 0 1: 1 2: 0 3: DI1 4: DI2 5: DI3 6: DI4 7: DI5 8: DI6 9: DI7 10: DI8 11: DI9 12: DI10 13: DI11 14: DI12 15: DI13 16: DI14 17: DI15 18: DI16 Others: B connector	0	-	Changeable at any time
C1-15	0xC10F	B2W module A - Bit01	Same as C1-14	0	-	Changeable at any time
C1-16	0xC110	B2W module A - Bit02	Same as C1-14	0	-	Changeable at any time
C1-17	0xC111	B2W module A - Bit03	Same as C1-14	0	-	Changeable at any time
C1-18	0xC112	B2W module A - Bit04	Same as C1-14	0	-	Changeable at any time
C1-19	0xC113	B2W module A - Bit05	Same as C1-14	0	-	Changeable at any time
C1-20	0xC114	B2W module A - Bit06	Same as C1-14	0	-	Changeable at any time
C1-21	0xC115	B2W module A - Bit07	Same as C1-14	0	-	Changeable at any time
C1-22	0xC116	B2W module A - Bit08	Same as C1-14	0	-	Changeable at any time
C1-23	0xC117	B2W module A - Bit09	Same as C1-14	0	-	Changeable at any time
C1-24	0xC118	B2W module A - Bit10	Same as C1-14	0	-	Changeable at any time
C1-25	0xC119	B2W module A - Bit11	Same as C1-14	0	-	Changeable at any time
C1-26	0xC11A	B2W module A - Bit12	Same as C1-14	0	-	Changeable at any time

Para.	Comm. Addr.	Name	Reference	De fault	Unit	Change
C1-27	0xC11B	B2W module A - Bit13	Same as C1-14	0	-	Changeable at any time
C1-28	0xC11C	B2W module A - Bit14	Same as C1-14	0	-	Changeable at any time
C1-29	0xC11D	B2W module A - Bit15	Same as C1-14	0	-	Changeable at any time
C1-30	0xC11E	B2W module B enable	Same as C1-12	0	-	Changeable at any time
C1-31	0xC11F	Bit inversion flag of B2W module B	0 to 65535	0	-	Changeable at any time
C1-32	0xC120	B2W module B - Bit00	Same as C1-14	0	-	Changeable at any time
C1-33	0xC121	B2W module B - Bit01	Same as C1-14	0	-	Changeable at any time
C1-34	0xC122	B2W module B - Bit02	Same as C1-14	0	-	Changeable at any time
C1-35	0xC123	B2W module B - Bit03	Same as C1-14	0	-	Changeable at any time
C1-36	0xC124	B2W module B - Bit04	Same as C1-14	0	-	Changeable at any time
C1-37	0xC125	B2W module B - Bit05	Same as C1-14	0	-	Changeable at any time
C1-38	0xC126	B2W module B - Bit06	Same as C1-14	0	-	Changeable at any time
C1-39	0xC127	B2W module B - Bit07	Same as C1-14	0	-	Changeable at any time
C1-40	0xC128	B2W module B - Bit08	Same as C1-14	0	-	Changeable at any time
C1-41	0xC129	B2W module B - Bit09	Same as C1-14	0	-	Changeable at any time
C1-42	0xC12A	B2W module B - Bit10	Same as C1-14	0	-	Changeable at any time
C1-43	0xC12B	B2W module B - Bit11	Same as C1-14	0	-	Changeable at any time
C1-44	0xC12C	B2W module B - Bit12	Same as C1-14	0	-	Changeable at any time
C1-45	0xC12D	B2W module B - Bit13	Same as C1-14	0	-	Changeable at any time
C1-46	0xC12E	B2W module B - Bit14	Same as C1-14	0	-	Changeable at any time
C1-47	0xC12F	B2W module B - Bit15	Same as C1-14	0	-	Changeable at any time
C1-48	0xC130	B2W module C enable	0: Disabled 1: Enabled	0	-	Changeable at any time

Para.	Comm. Addr.	Name	Reference	De fault	Unit	Change
C1-49	0xC131	Bit inversion flag of B2W module C	0 to 65535	0	-	Changeable at any time
C1-50	0xC132	B2W module C - Bit00	Same as C1-14	0	-	Changeable at any time
C1-51	0xC133	B2W module C - Bit01	Same as C1-14	0	-	Changeable at any time
C1-52	0xC134	B2W module C - Bit02	Same as C1-14	0	-	Changeable at any time
C1-53	0xC135	B2W module C - Bit03	Same as C1-14	0	-	Changeable at any time
C1-54	0xC136	B2W module C - Bit04	Same as C1-14	0	-	Changeable at any time
C1-55	0xC137	B2W module C - Bit05	Same as C1-14	0	-	Changeable at any time
C1-56	0xC138	B2W module C - Bit06	Same as C1-14	0	-	Changeable at any time
C1-57	0xC139	B2W module C - Bit07	Same as C1-14	0	-	Changeable at any time
C1-58	0xC13A	B2W module C - Bit08	Same as C1-14	0	-	Changeable at any time
C1-59	0xC13B	B2W module C - Bit09	Same as C1-14	0	-	Changeable at any time
C1-60	0xC13C	B2W module C - Bit10	Same as C1-14	0	-	Changeable at any time
C1-61	0xC13D	B2W module C - Bit11	Same as C1-14	0	-	Changeable at any time
C1-62	0xC13E	B2W module C - Bit12	Same as C1-14	0	-	Changeable at any time
C1-63	0xC13F	B2W module C - Bit13	Same as C1-14	0	-	Changeable at any time
C1-64	0xC140	B2W module C - Bit14	Same as C1-14	0	-	Changeable at any time
C1-65	0xC141	B2W module C - Bit15	Same as C1-14	0	-	Changeable at any time
C1-66	0xC142	B2W module D enable	Same as C1-12	0	-	Changeable at any time
C1-67	0xC143	Bit inversion flag of B2W module D	0 to 65535	0	-	Changeable at any time
C1-68	0xC144	B2W module D - Bit00	Same as C1-14	0	-	Changeable at any time
C1-69	0xC145	B2W module D - Bit01	Same as C1-14	0	-	Changeable at any time
C1-70	0xC146	B2W module D - Bit02	Same as C1-14	0	-	Changeable at any time

Para.	Comm. Addr.	Name	Reference	De fault	Unit	Change
C1-71	0xC147	B2W module D - Bit03	Same as C1-14	0	-	Changeable at any time
C1-72	0xC148	B2W module D - Bit04	Same as C1-14	0	-	Changeable at any time
C1-73	0xC149	B2W module D - Bit05	Same as C1-14	0	-	Changeable at any time
C1-74	0xC14A	B2W module D - Bit06	Same as C1-14	0	-	Changeable at any time
C1-75	0xC14B	B2W module D - Bit07	Same as C1-14	0	-	Changeable at any time
C1-76	0xC14C	B2W module D - Bit08	Same as C1-14	0	-	Changeable at any time
C1-77	0xC14D	B2W module D - Bit09	Same as C1-14	0	-	Changeable at any time
C1-78	0xC14E	B2W module D - Bit10	Same as C1-14	0	-	Changeable at any time
C1-79	0xC14F	B2W module D - Bit11	Same as C1-14	0	-	Changeable at any time
C1-80	0xC150	B2W module D - Bit12	Same as C1-14	0	-	Changeable at any time
C1-81	0xC151	B2W module D - Bit13	Same as C1-14	0	-	Changeable at any time
C1-82	0xC152	B2W module D - Bit14	Same as C1-14	0	-	Changeable at any time
C1-83	0xC153	B2W module D - Bit15	Same as C1-14	0	-	Changeable at any time
C2-00	0xC200	LOWORD of W-DW conversion A	0: 0 Others: K connector	0	-	Changeable at any time
C2-01	0xC201	HIWORD of W-DW conversion A	0: Disabled Others: K connector	0	-	Changeable at any time
C2-02	0xC202	Low-order bits of base value of W-DW conversion A	0 to 65535	0	-	Changeable at any time
C2-03	0xC203	High-order bits of base value of W-DW conversion A	0 to 65535	0	-	Changeable at any time
C2-04	0xC204	LOWORD of W-DW conversion B	0: 0 Others: K connector	0	-	Changeable at any time
C2-05	0xC205	HIWORD of W-DW conversion B	0: Disabled Others: K connector	0	-	Changeable at any time
C2-06	0xC206	Low-order bits of base value of W-DW conversion B	0 to 65535	0	-	Changeable at any time

Para.	Comm. Addr.	Name	Reference	De fault	Unit	Change
C2-07	0xC207	High-order bits of base value of W-DW conversion B	0 to 65535	0	-	Changeable at any time
C2-08	0xC208	LOWORD of W-DW conversion C	0: 0 Others: K connector	0	-	Changeable at any time
C2-09	0xC209	HIWORD of W-DW conversion C	0: Disabled Others: K connector	0	-	Changeable at any time
C2-10	0xC20A	Low-order bits of base value of W-DW conversion C	0 to 65535	0	-	Changeable at any time
C2-11	0xC20B	High-order bits of base value of W-DW conversion C	0 to 65535	0	-	Changeable at any time
C2-12	0xC20C	LOWORD of W-DW conversion D	0: 0 Others: K connector	0	-	Changeable at any time
C2-13	0xC20D	HIWORD of W-DW conversion D	0: Disabled Others: K connector	0	-	Changeable at any time
C2-14	0xC20E	Low-order bits of base value of W-DW conversion D	0 to 65535	0	-	Changeable at any time
C2-15	0xC20F	High-order bits of base value of W-DW conversion D	0 to 65535	0	-	Changeable at any time
C2-32	0xC220	DW-W conversion A	0: Disabled Others: K connector	0	-	Changeable at any time
C2-33	0xC221	Low-order bits of base value of DW-W conversion A	0 to 65535	0	-	Changeable at any time
C2-34	0xC222	High-order bits of base value of DW-W conversion A	0 to 65535	0	-	Changeable at any time
C2-35	0xC223	DW-W conversion B	0: Disabled Others: K connector	0	-	Changeable at any time
C2-36	0xC224	Low-order bits of base value of DW-W conversion B	0 to 65535	0	-	Changeable at any time
C2-37	0xC225	High-order bits of base value of DW-W conversion B	0 to 65535	0	-	Changeable at any time
C2-38	0xC226	DW-W conversion C	0: Disabled Others: K connector	0	-	Changeable at any time
C2-39	0xC227	Low-order bits of base value of DW-W conversion C	0 to 65535	0	-	Changeable at any time

Para.	Comm. Addr.	Name	Reference	De fault	Unit	Change
C2-40	0xC228	High-order bits of base value of DW-W conversion C	0 to 65535	0	-	Changeable at any time
C2-41	0xC229	DW-W conversion D	0: Disabled Others: K connector	0	-	Changeable at any time
C2-42	0xC22A	Low-order bits of base value of DW-W conversion D	0 to 65535	0	-	Changeable at any time
C2-43	0xC22B	High-order bits of base value of DW-W conversion D	0 to 65535	0	-	Changeable at any time
C3-00	0xC300	Function of logic AND-OR module A	0: Disabled 1: AND 2: OR	0	-	Changeable at any time
C3-01	0xC301	Input 1 of logic AND-OR module A	0: Logic 0 1: Logic 1 2: Logic 0 3: DI1 4: DI2 5: DI3 6: DI4 7: DI5 8: DI6 9: DI7 10: DI8 11: DI9 12: DI10 13: DI11 14: DI12 15: DI13 16: DI14 17: DI15 18: DI16 Others: B connector	0	-	Changeable at any time
C3-02	0xC302	Input 2 of logic AND-OR module A	Same as C3-01	0	-	Changeable at any time
C3-03	0xC303	Input 3 of logic AND-OR module A	Same as C3-01	0	-	Changeable at any time
C3-04	0xC304	Input 4 of logic AND-OR module A	Same as C3-01	0	-	Changeable at any time
C3-05	0xC305	Function of logic AND-OR module B	0: Disabled 1: AND 2: OR	0	-	Changeable at any time
C3-06	0xC306	Input 1 of logic AND-OR module B	Same as C3-01	0	-	Changeable at any time
C3-07	0xC307	Input 2 of logic AND-OR module B	Same as C3-01	0	-	Changeable at any time

Para.	Comm. Addr.	Name	Reference	De fault	Unit	Change
C3-08	0xC308	Input 3 of logic AND-OR module B	Same as C3-01	0	-	Changeable at any time
C3-09	0xC309	Input 4 of logic AND-OR module B	Same as C3-01	0	-	Changeable at any time
C3-10	0xC30A	Function of logic AND-OR module C	Same as C3-05	0	-	Changeable at any time
C3-11	0xC30B	Input 1 of logic AND-OR module C	Same as C3-01	0	-	Changeable at any time
C3-12	0xC30C	Input 2 of logic AND-OR module C	Same as C3-01	0	-	Changeable at any time
C3-13	0xC30D	Input 3 of logic AND-OR module C	Same as C3-01	0	-	Changeable at any time
C3-14	0xC30E	Input 4 of logic AND-OR module C	Same as C3-01	0	-	Changeable at any time
C3-15	0xC30F	Function of logic AND-OR module D	Same as C3-05	0	-	Changeable at any time
C3-16	0xC310	Input 1 of logic AND-OR module D	Same as C3-01	0	-	Changeable at any time
C3-17	0xC311	Input 2 of logic AND-OR module D	Same as C3-01	0	-	Changeable at any time
C3-18	0xC312	Input 3 of logic AND-OR module D	Same as C3-01	0	-	Changeable at any time
C3-19	0xC313	Input 4 of logic AND-OR module D	Same as C3-01	0	-	Changeable at any time
C3-20	0xC314	Function of logic AND-OR module E	Same as C3-05	0	-	Changeable at any time
C3-21	0xC315	Input 1 of logic AND-OR module E	Same as C3-01	0	-	Changeable at any time
C3-22	0xC316	Input 2 of logic AND-OR module E	Same as C3-01	0	-	Changeable at any time
C3-23	0xC317	Input 3 of logic AND-OR module E	Same as C3-01	0	-	Changeable at any time
C3-24	0xC318	Function of logic AND-OR module F	Same as C3-05	0	-	Changeable at any time
C3-25	0xC319	Input 1 of logic AND-OR module F	Same as C3-01	0	-	Changeable at any time
C3-26	0xC31A	Input 2 of logic AND-OR module F	Same as C3-01	0	-	Changeable at any time
C3-27	0xC31B	Input 3 of logic AND-OR module F	Same as C3-01	0	-	Changeable at any time
C3-28	0xC31C	Function of logic AND-OR module G	Same as C3-05	0	-	Changeable at any time
C3-29	0xC31D	Input 1 of logic AND-OR module G	Same as C3-01	0	-	Changeable at any time

Para.	Comm. Addr.	Name	Reference	Default	Unit	Change
C3-30	0xC31E	Input 2 of logic AND-OR module G	Same as C3-01	0	-	Changeable at any time
C3-31	0xC31F	Input 3 of logic AND-OR module G	Same as C3-01	0	-	Changeable at any time
C3-32	0xC320	Function of logic AND-OR module H	Same as C3-05	0	-	Changeable at any time
C3-33	0xC321	Input 1 of logic AND-OR module H	Same as C3-01	0	-	Changeable at any time
C3-34	0xC322	Input 2 of logic AND-OR module H	Same as C3-01	0	-	Changeable at any time
C3-35	0xC323	Input 3 of logic AND-OR module H	Same as C3-01	0	-	Changeable at any time
C3-36	0xC324	Function of logic AND-OR module I	Same as C3-05	0	-	Changeable at any time
C3-37	0xC325	Input 1 of logic AND-OR module I	Same as C3-01	0	-	Changeable at any time
C3-38	0xC326	Input 2 of logic AND-OR module I	Same as C3-01	0	-	Changeable at any time
C3-39	0xC327	Input 3 of logic AND-OR module I	Same as C3-01	0	-	Changeable at any time
C3-40	0xC328	Function of logic AND-OR module J	Same as C3-05	0	-	Changeable at any time
C3-41	0xC329	Input 1 of logic AND-OR module J	Same as C3-01	0	-	Changeable at any time
C3-42	0xC32A	Input 2 of logic AND-OR module J	Same as C3-01	0	-	Changeable at any time
C3-43	0xC32B	Input 3 of logic AND-OR module J	Same as C3-01	0	-	Changeable at any time
C3-44	0xC32C	Function of logic AND-OR module K	Same as C3-05	0	-	Changeable at any time
C3-45	0xC32D	Input 1 of logic AND-OR module K	Same as C3-01	0	-	Changeable at any time
C3-46	0xC32E	Input 2 of logic AND-OR module K	Same as C3-01	0	-	Changeable at any time
C3-47	0xC32F	Input 3 of logic AND-OR module K	Same as C3-01	0	-	Changeable at any time
C3-48	0xC330	Function of logic AND-OR module L	Same as C3-05	0	-	Changeable at any time
C3-49	0xC331	Input 1 of logic AND-OR module L	Same as C3-01	0	-	Changeable at any time
C3-50	0xC332	Input 2 of logic AND-OR module L	Same as C3-01	0	-	Changeable at any time
C3-51	0xC333	Input 3 of logic AND-OR module L	Same as C3-01	0	-	Changeable at any time

Para.	Comm. Addr.	Name	Reference	De fault	Unit	Change
C3-56	0xC338	Input of logic NOT module A	0: Disabled 1: Logic 1 2: Logic 0 3: DI1 4: DI2 5: DI3 6: DI4 7: DI5 8: DI6 9: DI7 10: DI8 11: DI9 12: DI10 13: DI11 14: DI12 15: DI13 16: DI14 17: DI15 18: DI16 Others: B connector	0	-	Changeable at any time
C3-57	0xC339	Input of logic NOT module B	C3-56	0	-	Changeable at any time
C3-58	0xC33A	Input of logic NOT module C	C3-56	0	-	Changeable at any time
C3-59	0xC33B	Input of logic NOT module D	C3-56	0	-	Changeable at any time
C3-60	0xC33C	Input of logic NOT module E	C3-56	0	-	Changeable at any time
C3-61	0xC33D	Input of logic NOT module F	C3-56	0	-	Changeable at any time
C3-62	0xC33E	Input of logic NOT module G	C3-56	0	-	Changeable at any time
C3-63	0xC33F	Input of logic NOT module H	C3-56	0	-	Changeable at any time
C3-64	0xC340	Input of logic NOT module I	C3-56	0	-	Changeable at any time
C3-65	0xC341	Input of logic NOT module J	C3-56	0	-	Changeable at any time
C3-66	0xC342	Input of logic NOT module K	C3-56	0	-	Changeable at any time
C3-67	0xC343	Input of logic NOT module L	C3-56	0	-	Changeable at any time
C3-68	0xC344	Input of logic NOT module M	C3-56	0	-	Changeable at any time
C3-69	0xC345	Input of logic NOT module N	C3-56	0	-	Changeable at any time

Para.	Comm. Addr.	Name	Reference	De fault	Unit	Change
C3-70	0xC346	Input of logic NOT module O	C3-56	0	-	Changeable at any time
C3-71	0xC347	Input of logic NOT module P	C3-56	0	-	Changeable at any time
C3-72	0xC348	Function of logic XOR/XNOR module A	0: Disabled 1: XOR 2: XNOR	0	-	Changeable at any time
C3-73	0xC349	Input 1 of logic XOR/XNOR module A	Same as C3-01	0	-	Changeable at any time
C3-74	0xC34A	Input 2 of logic XOR/XNOR module A	Same as C3-01	0	-	Changeable at any time
C3-75	0xC34B	Function of logic XOR/XNOR module B	0: Disabled 1: XOR 2: XNOR	0	-	Changeable at any time
C3-76	0xC34C	Input 1 of logic XOR/XNOR module B	Same as C3-01	0	-	Changeable at any time
C3-77	0xC34D	Input 2 of logic XOR/XNOR module B	Same as C3-01	0	-	Changeable at any time
C3-78	0xC34E	Function of logic XOR/XNOR module C	0: Disabled 1: XOR 2: XNOR	0	-	Changeable at any time
C3-79	0xC34F	Input 1 of logic XOR/XNOR module C	Same as C3-01	0	-	Changeable at any time
C3-80	0xC350	Input 2 of logic XOR/XNOR module C	Same as C3-01	0	-	Changeable at any time
C3-81	0xC351	Function of logic XOR/XNOR module D	0: Disabled 1: XOR 2: XNOR	0	-	Changeable at any time
C3-82	0xC352	Input 1 of logic XOR/XNOR module D	Same as C3-01	0	-	Changeable at any time
C3-83	0xC353	Input 2 of logic XOR/XNOR module D	Same as C3-01	0	-	Changeable at any time
C3-84	0xC354	Function of logic XOR/XNOR module E	0: Disabled 1: XOR 2: XNOR	0	-	Changeable at any time
C3-85	0xC355	Input 1 of logic XOR/XNOR module E	Same as C3-01	0	-	Changeable at any time

Para.	Comm. Addr.	Name	Reference	Default	Unit	Change
C3-86	0xC356	Input 2 of logic XOR/XNOR module E	Same as C3-01	0	-	Changeable at any time
C3-87	0xC357	Function of logic XOR/XNOR module F	0: Disabled 1: XOR 2: XNOR	0	-	Changeable at any time
C3-88	0xC358	Input 1 of logic XOR/XNOR module F	Same as C3-01	0	-	Changeable at any time
C3-89	0xC359	Input 2 of logic XOR/XNOR module F	Same as C3-01	0	-	Changeable at any time
C3-90	0xC35A	Function of logic XOR/XNOR module G	0: Disabled 1: XOR 2: XNOR	0	-	Changeable at any time
C3-91	0xC35B	Input 1 of logic XOR/XNOR module G	Same as C3-01	0	-	Changeable at any time
C3-92	0xC35C	Input 2 of logic XOR/XNOR module G	Same as C3-01	0	-	Changeable at any time
C3-93	0xC35D	Function of logic XOR/XNOR module H	0: Disabled 1: XOR 2: XNOR	0	-	Changeable at any time
C3-94	0xC35E	Input 1 of logic XOR/XNOR module H	Same as C3-01	0	-	Changeable at any time
C3-95	0xC35F	Input 2 of logic XOR/XNOR module H	Same as C3-01	0	-	Changeable at any time
C4-00	0xC400	Input of floating-point absolute value module A	0: Disabled 1: AI1 2: AI2 3: AI3 4: HDI 5: Aim 6: Multi-reference 7: Motor-driven potentiometer 8: PID Others: F connector	0	-	Changeable at any time
C4-01	0xC401	Input of floating-point absolute value module B	Same as C4-00	0	-	Changeable at any time
C4-02	0xC402	Input of floating-point absolute value module C	Same as C4-00	0	-	Changeable at any time

Para.	Comm. Addr.	Name	Reference	Default	Unit	Change
C4-03	0xC403	Input of floating-point absolute value module D	Same as C4-00	0	-	Changeable at any time
C4-04	0xC404	Input of floating-point absolute value module E	Same as C4-00	0	-	Changeable at any time
C4-05	0xC405	Input of fixed-point absolute value module F	0: Disabled Others: K connector	0	-	Changeable at any time
C4-06	0xC406	Input of fixed-point absolute value module G	0: Disabled Others: K connector	0	-	Changeable at any time
C4-07	0xC407	Input of fixed-point absolute value module H	0: Disabled Others: K connector	0	-	Changeable at any time
C4-08	0xC408	Input 1 of floating-point ADD/ SUBTRACT module A	0: Disabled 1: AI1 2: AI2 3: AI3 4: HDI 5: Aim 6: Multi-reference 7: Motor-driven potentiometer 8: PID Others: F connector	0	-	Changeable at any time
C4-09	0xC409	Input 2 of ADD/ SUBTRACT module A (ADD)	0: 0 1: AI1 2: AI2 3: AI3 4: HDI 5: Aim 6: Multi-reference 7: Motor-driven potentiometer 8: PID Others: F connector	0	-	Changeable at any time
C4-10	0xC40A	Input 3 of ADD/ SUBTRACT module A (ADD)	Same as C4-09	0	-	Changeable at any time
C4-11	0xC40B	Input 4 of ADD/ SUBTRACT module A (SUBTRACT)	Same as C4-09	0	-	Changeable at any time
C4-12	0xC40C	Input 1 of floating-point ADD/ SUBTRACT module B	Same as C4-09	0	-	Changeable at any time
C4-13	0xC40D	Input 2 of ADD/ SUBTRACT module B (ADD)	Same as C4-09	0	-	Changeable at any time

Para.	Comm. Addr.	Name	Reference	Default	Unit	Change
C4-14	0xC40E	Input 3 of ADD/ SUBTRACT module B (ADD)	Same as C4-09	0	-	Changeable at any time
C4-15	0xC40F	Input 4 of ADD/ SUBTRACT module B (SUBTRACT)	Same as C4-09	0	-	Changeable at any time
C4-16	0xC410	Input 1 of floating-point ADD/ SUBTRACT module C	Same as C4-09	0	-	Changeable at any time
C4-17	0xC411	Input 2 of ADD/ SUBTRACT module C (ADD)	Same as C4-09	0	-	Changeable at any time
C4-18	0xC412	Input 3 of ADD/ SUBTRACT module C (ADD)	Same as C4-09	0	-	Changeable at any time
C4-19	0xC413	Input 4 of ADD/ SUBTRACT module C (SUBTRACT)	Same as C4-09	0	-	Changeable at any time
C4-20	0xC414	Input 1 of floating-point ADD/ SUBTRACT module D	Same as C4-09	0	-	Changeable at any time
C4-21	0xC415	Input 2 of ADD/ SUBTRACT module D (ADD)	Same as C4-09	0	-	Changeable at any time
C4-22	0xC416	Input 3 of ADD/ SUBTRACT module D (ADD)	Same as C4-09	0	-	Changeable at any time
C4-23	0xC417	Input 4 of ADD/ SUBTRACT module D (SUBTRACT)	Same as C4-09	0	-	Changeable at any time
C4-24	0xC418	Input 1 of floating-point ADD/ SUBTRACT module E	Same as C4-09	0	-	Changeable at any time
C4-25	0xC419	Input 2 of ADD/ SUBTRACT module E (ADD)	Same as C4-09	0	-	Changeable at any time
C4-26	0xC41A	Input 3 of ADD/ SUBTRACT module E (ADD)	Same as C4-09	0	-	Changeable at any time
C4-27	0xC41B	Input 4 of ADD/ SUBTRACT module E (SUBTRACT)	Same as C4-09	0	-	Changeable at any time

Para.	Comm. Addr.	Name	Reference	Default	Unit	Change
C4-28	0xC41C	Input 1 of fixed-point ADD/ SUBTRACT module F	0: Disabled Others: K connector	0	-	Changeable at any time
C4-29	0xC41D	Input 2 of ADD/ SUBTRACT module F (ADD)	Same as C4-28	0	-	Changeable at any time
C4-30	0xC41E	Input 3 of ADD/ SUBTRACT module F (ADD)	Same as C4-28	0	-	Changeable at any time
C4-31	0xC41F	Input 4 of ADD/ SUBTRACT module F (SUBTRACT)	Same as C4-28	0	-	Changeable at any time
C4-32	0xC420	Input 1 of fixed-point ADD/ SUBTRACT module G	Same as C4-28	0	-	Changeable at any time
C4-33	0xC421	Input 2 of ADD/ SUBTRACT module G (ADD)	Same as C4-28	0	-	Changeable at any time
C4-34	0xC422	Input 3 of ADD/ SUBTRACT module G (ADD)	Same as C4-28	0	-	Changeable at any time
C4-35	0xC423	Input 4 of ADD/ SUBTRACT module G (SUBTRACT)	Same as C4-28	0	-	Changeable at any time
C4-36	0xC424	Input 1 of fixed-point ADD/ SUBTRACT module H	Same as C4-28	0	-	Changeable at any time
C4-37	0xC425	Input 2 of ADD/ SUBTRACT module H (ADD)	Same as C4-28	0	-	Changeable at any time
C4-38	0xC426	Input 3 of ADD/ SUBTRACT module H (ADD)	Same as C4-28	0	-	Changeable at any time
C4-39	0xC427	Input 4 of ADD/ SUBTRACT module H (SUBTRACT)	Same as C4-28	0	-	Changeable at any time
C4-40	0xC428	Input 1 of floating-point MULTIPLY/ DIVIDE module A	C4-08	0	-	Changeable at any time

Para.	Comm. Addr.	Name	Reference	De fault	Unit	Change
C4-41	0xC429	Input 2 of MULTIPLY/DIVIDE module A (MULTIPLY)	0: 1 1: AI1 2: AI2 3: AI3 4: HDI 5: Aim 6: Multi-reference 7: Motor-driven potentiometer 8: PID Others: F connector	0	-	Changeable at any time
C4-42	0xC42A	Input 3 of MULTIPLY/DIVIDE module A (DIVIDE)	Same as C4-41	0	-	Changeable at any time
C4-43	0xC42B	Input 1 of floating-point MULTIPLY/ DIVIDE module B	0: Disabled 1: AI1 2: AI2 3: AI3 4: HDI 5: Aim 6: Multi-reference 7: Motor-driven potentiometer 8: PID Others: F connector	0	-	Changeable at any time
C4-44	0xC42C	Input 2 of MULTIPLY/DIVIDE module B (MULTIPLY)	Same as C4-41	0	-	Changeable at any time
C4-45	0xC42D	Input 3 of MULTIPLY/DIVIDE module B (DIVIDE)	Same as C4-41	0	-	Changeable at any time
C4-46	0xC42E	Input 1 of floating-point MULTIPLY/ DIVIDE module C	0: Disabled 1: AI1 2: AI2 3: AI3 4: HDI 5: Aim 6: Multi-reference 7: Motor-driven potentiometer 8: PID Others: F connector	0	-	Changeable at any time
C4-47	0xC42F	Input 2 of MULTIPLY/DIVIDE module C (MULTIPLY)	Same as C4-41	0	-	Changeable at any time
C4-48	0xC430	Input 3 of MULTIPLY/DIVIDE module C (DIVIDE)	Same as C4-41	0	-	Changeable at any time

Para.	Comm. Addr.	Name	Reference	De fault	Unit	Change
C4-49	0xC431	Input 1 of floating-point MULTIPLY/ DIVIDE module D	0: Disabled 1: AI1 2: AI2 3: AI3 4: HDI 5: Aim 6: Multi-reference 7: Motor-driven potentiometer 8: PID Others: F connector	0	-	Changeable at any time
C4-50	0xC432	Input 2 of MULTIPLY/DIVIDE module D (MULTIPLY)	Same as C4-41	0	-	Changeable at any time
C4-51	0xC433	Input 3 of MULTIPLY/DIVIDE module D (DIVIDE)	Same as C4-41	0	-	Changeable at any time
C4-52	0xC434	Input 1 of floating-point MULTIPLY/ DIVIDE module E	0: Disabled 1: AI1 2: AI2 3: AI3 4: HDI 5: Aim 6: Multi-reference 7: Motor-driven potentiometer 8: PID Others: F connector	0	-	Changeable at any time
C4-53	0xC435	Input 2 of MULTIPLY/DIVIDE module E (MULTIPLY)	Same as C4-41	0	-	Changeable at any time
C4-54	0xC436	Input 3 of MULTIPLY/DIVIDE module E (DIVIDE)	Same as C4-41	0	-	Changeable at any time
C4-55	0xC437	Input 1 of fixed-point MULTIPLY/ DIVIDE module F	0: Disabled Others: K connector	0	-	Changeable at any time
C4-56	0xC438	Input 2 of MULTIPLY/DIVIDE module F (MULTIPLY)	Same as C4-55	0	-	Changeable at any time
C4-57	0xC439	Input 3 of MULTIPLY/DIVIDE module F (DIVIDE)	Same as C4-55	0	-	Changeable at any time
C4-58	0xC43A	Input 1 of fixed-point MULTIPLY/ DIVIDE module G	Same as C4-55	0	-	Changeable at any time

Para.	Comm. Addr.	Name	Reference	De fault	Unit	Change
C4-59	0xC43B	Input 2 of MULTIPLY/DIVIDE module G (MULTIPLY)	Same as C4-55	0	-	Changeable at any time
C4-60	0xC43C	Input 3 of MULTIPLY/DIVIDE module G (DIVIDE)	Same as C4-55	0	-	Changeable at any time
C4-61	0xC43D	Input 1 of fixed-point MULTIPLY/ DIVIDE module H	Same as C4-55	0	-	Changeable at any time
C4-62	0xC43E	Input 2 of MULTIPLY/DIVIDE module H (MULTIPLY)	Same as C4-55	0	-	Changeable at any time
C4-63	0xC43F	Input 3 of MULTIPLY/DIVIDE module H (DIVIDE)	Same as C4-55	0	-	Changeable at any time
C4-64	0xC440	Function of floating-point comparison module A	0: Module disabled 1: Input 1 > Input 2 2: Input 1 < Input 2 3: Input 1 = Input 2	0	-	Changeable at any time
C4-65	0xC441	Input 1 of floating-point comparison module A	0: 0 1: AI1 2: AI2 3: AI3 4: HDI 5: Aim 6: Multi-reference 7: Motor-driven potentiometer 8: PID Others: F connector	0	-	Changeable at any time
C4-66	0xC442	Input 2 of floating-point comparison module A	0: 0 1: AI1 2: AI2 3: AI3 4: HDI 5: Aim 6: Multi-reference 7: Motor-driven potentiometer 8: PID Others: F connector	0	-	Changeable at any time
C4-67	0xC443	Hysteresis input of floating-point comparison module A	0.00% to 655.35%	0.00	%	Changeable at any time

Para.	Comm. Addr.	Name	Reference	De fault	Unit	Change
C4-68	0xC444	Function of floating-point comparison module B	0: Module disabled 1: Input 1 > Input 2 2: Input 1 < Input 2 3: Input 1 = Input 2	0	-	Changeable at any time
C4-69	0xC445	Input 1 of floating-point comparison module B	0: 0 1: AI1 2: AI2 3: AI3 4: HDI 5: Aim 6: Multi-reference 7: Motor-driven potentiometer 8: PID Others: F connector	0	-	Changeable at any time
C4-70	0xC446	Input 2 of floating-point comparison module B	0: 0 1: AI1 2: AI2 3: AI3 4: HDI 5: Aim 6: Multi-reference 7: Motor-driven potentiometer 8: PID Others: F connector	0	-	Changeable at any time
C4-71	0xC447	Hysteresis input of floating-point comparison module B	0.00% to 655.35%	0.00	%	Changeable at any time
C4-72	0xC448	Function of floating-point comparison module C	0: Module disabled 1: Input 1 > Input 2 2: Input 1 < Input 2 3: Input 1 = Input 2	0	-	Changeable at any time
C4-73	0xC449	Input 1 of floating-point comparison module C	0: 0 1: AI1 2: AI2 3: AI3 4: HDI 5: Aim 6: Multi-reference 7: Motor-driven potentiometer 8: PID Others: F connector	0	-	Changeable at any time

Para.	Comm. Addr.	Name	Reference	Default	Unit	Change
C4-74	0xC44A	Input 2 of floating-point comparison module C	0: 0 1: AI1 2: AI2 3: AI3 4: HDI 5: Aim 6: Multi-reference 7: Motor-driven potentiometer 8: PID Others: F connector	0	-	Changeable at any time
C4-75	0xC44B	Hysteresis input of floating-point comparison module C	0.00% to 655.35%	0.00	%	Changeable at any time
C4-76	0xC44C	Function of floating-point comparison module D	0: Module disabled 1: Input 1 > Input 2 2: Input 1 < Input 2 3: Input 1 = Input 2	0	-	Changeable at any time
C4-77	0xC44D	Input 1 of floating-point comparison module D	0: 0 1: AI1 2: AI2 3: AI3 4: HDI 5: Aim 6: Multi-reference 7: Motor-driven potentiometer 8: PID Others: F connector	0	-	Changeable at any time
C4-78	0xC44E	Input 2 of floating-point comparison module D	0: 0 1: AI1 2: AI2 3: AI3 4: HDI 5: Aim 6: Multi-reference 7: Motor-driven potentiometer 8: PID Others: F connector	0	-	Changeable at any time
C4-79	0xC44F	Hysteresis input of floating-point comparison module D	0.00% to 655.35%	0.00	%	Changeable at any time
C4-80	0xC450	Function of fixed-point comparison module E	0: Module disabled 1: Input 1 > Input 2 2: Input 1 < Input 2 3: Input 1 = Input 2	0	-	Changeable at any time

Para.	Comm. Addr.	Name	Reference	De fault	Unit	Change
C4-81	0xC451	Input 1 of fixed-point comparison module E	0: 0 Others: K connector	0	-	Changeable at any time
C4-82	0xC452	Input 2 of fixed-point comparison module E	0: 0 Others: K connector	0	-	Changeable at any time
C4-83	0xC453	Hysteresis input of fixed-point comparison module E	0.00% to 655.35%	0.00	%	Changeable at any time
C4-84	0xC454	Function of fixed-point comparison module F	0: Module disabled 1: Input 1 > Input 2 2: Input 1 < Input 2 3: Input 1 = Input 2	0	-	Changeable at any time
C4-85	0xC455	Input 1 of fixed-point comparison module F	0: 0 Others: K connector	0	-	Changeable at any time
C4-86	0xC456	Input 2 of fixed-point comparison module F	0: 0 Others: K connector	0	-	Changeable at any time
C4-87	0xC457	Hysteresis input of fixed-point comparison module F	0.00% to 655.35%	0.00	%	Changeable at any time
C4-88	0xC458	Function of fixed-point comparison module G	0: Module disabled 1: Input 1 > Input 2 2: Input 1 < Input 2 3: Input 1 = Input 2	0	-	Changeable at any time
C4-89	0xC459	Input 1 of fixed-point comparison module G	0: 0 Others: K connector	0	-	Changeable at any time
C4-90	0xC45A	Input 2 of fixed-point comparison module G	0: 0 Others: K connector	0	-	Changeable at any time
C4-91	0xC45B	Hysteresis input of fixed-point comparison module G	0.00% to 655.35%	0.00	%	Changeable at any time
C4-92	0xC45C	Function of fixed-point comparison module H	0: Module disabled 1: Input 1 > Input 2 2: Input 1 < Input 2 3: Input 1 = Input 2	0	-	Changeable at any time
C4-93	0xC45D	Input 1 of fixed-point comparison module H	0: 0 Others: K connector	0	-	Changeable at any time

Para.	Comm. Addr.	Name	Reference	De fault	Unit	Change
C4-94	0xC45E	Input 2 of fixed-point comparison module H	0: 0 Others: K connector	0	-	Changeable at any time
C4-95	0xC45F	Hysteresis input of fixed-point comparison module H	0.00% to 655.35%	0.00	%	Changeable at any time
C5-00	0xC500	Input source of binary selector module A	0: Disabled 1: Logic 1 2: Logic 0 3: DI1 4: DI2 5: DI3 6: DI4 7: DI5 8: DI6 9: DI7 10: DI8 11: DI9 12: DI10 13: DI11 14: DI12 15: DI13 16: DI14 17: DI15 18: DI16 Others: B connector	0	-	Changeable at any time
C5-01	0xC501	Input 1 of binary selector module A	0: Logic 0 1: Logic 1 2: Logic 0 3: DI1 4: DI2 5: DI3 6: DI4 7: DI5 8: DI6 9: DI7 10: DI8 11: DI9 12: DI10 13: DI11 14: DI12 15: DI13 16: DI14 17: DI15 18: DI16 Others: B connector	0	-	Changeable at any time

Para.	Comm. Addr.	Name	Reference	De fault	Unit	Change
C5-02	0xC502	Input 2 of binary selector module A	Same as C5-01	0	-	Changeable at any time
C5-03	0xC503	Input source of binary selector module B	Same as C5-01	0	-	Changeable at any time
C5-04	0xC504	Input 1 of binary selector module B	Same as C5-01	0	-	Changeable at any time
C5-05	0xC505	Input 2 of binary selector module B	Same as C5-01	0	-	Changeable at any time
C5-06	0xC506	Input source of binary selector module C	0: Disabled 1: Logic 1 2: Logic 0 3: DI1 4: DI2 5: DI3 6: DI4 7: DI5 8: DI6 9: DI7 10: DI8 11: DI9 12: DI10 13: DI11 14: DI12 15: DI13 16: DI14 17: DI15 18: DI16 Others: B connector	0	-	Changeable at any time

Para.	Comm. Addr.	Name	Reference	De fault	Unit	Change
C5-07	0xC507	Input 1 of binary selector module C	0: Logic 0 1: Logic 1 2: Logic 0 3: DI1 4: DI2 5: DI3 6: DI4 7: DI5 8: DI6 9: DI7 10: DI8 11: DI9 12: DI10 13: DI11 14: DI12 15: DI13 16: DI14 17: DI15 18: DI16 Others: B connector	0	-	Changeable at any time
C5-08	0xC508	Input 2 of binary selector module C	Same as C5-01	0	-	Changeable at any time
C5-09	0xC509	Input source of binary selector module D	0: Disabled 1: Logic 1 2: Logic 0 3: DI1 4: DI2 5: DI3 6: DI4 7: DI5 8: DI6 9: DI7 10: DI8 11: DI9 12: DI10 13: DI11 14: DI12 15: DI13 16: DI14 17: DI15 18: DI16 Others: B connector	0	-	Changeable at any time

Para.	Comm. Addr.	Name	Reference	De fault	Unit	Change
C5-10	0xC50A	Input 1 of binary selector module D	0: Logic 0 1: Logic 1 2: Logic 0 3: DI1 4: DI2 5: DI3 6: DI4 7: DI5 8: DI6 9: DI7 10: DI8 11: DI9 12: DI10 13: DI11 14: DI12 15: DI13 16: DI14 17: DI15 18: DI16 Others: B connector	0	-	Changeable at any time
C5-11	0xC50B	Input 2 of binary selector module D	0: Logic 0 1: Logic 1 2: Logic 0 3: DI1 4: DI2 5: DI3 6: DI4 7: DI5 8: DI6 9: DI7 10: DI8 11: DI9 12: DI10 13: DI11 14: DI12 15: DI13 16: DI14 17: DI15 18: DI21 Others: B connector	0	-	Changeable at any time

Para.	Comm. Addr.	Name	Reference	De fault	Unit	Change
C5-12	0xC50C	Input source of binary selector module E	0: Disabled 1: Logic 1 2: Logic 0 3: DI1 4: DI2 5: DI3 6: DI4 7: DI5 8: DI6 9: DI7 10: DI8 11: DI9 12: DI10 13: DI11 14: DI12 15: DI13 16: DI14 17: DI15 18: DI16 Others: B connector	0	-	Changeable at any time
C5-13	0xC50D	Input 1 of binary selector module E	0: Logic 0 1: Logic 1 2: Logic 0 3: DI1 4: DI2 5: DI3 6: DI4 7: DI5 8: DI6 9: DI7 10: DI8 11: DI9 12: DI10 13: DI11 14: DI12 15: DI13 16: DI14 17: DI15 18: DI16 Others: B connector	0	-	Changeable at any time
C5-14	0xC50E	Input 2 of binary selector module E	Same as C5-01	0	-	Changeable at any time

Para.	Comm. Addr.	Name	Reference	De fault	Unit	Change
C5-15	0xC50F	Input source of binary selector module F	0: Disabled 1: Logic 1 2: Logic 0 3: DI1 4: DI2 5: DI3 6: DI4 7: DI5 8: DI6 9: DI7 10: DI8 11: DI9 12: DI10 13: DI11 14: DI12 15: DI13 16: DI14 17: DI15 18: DI16 Others: B connector	0	-	Changeable at any time
C5-16	0xC510	Input 1 of binary selector module F	0: Logic 0 1: Logic 1 2: Logic 0 3: DI1 4: DI2 5: DI3 6: DI4 7: DI5 8: DI6 9: DI7 10: DI8 11: DI9 12: DI10 13: DI11 14: DI12 15: DI13 16: DI14 17: DI15 18: DI16 Others: B connector	0	-	Changeable at any time

Para.	Comm. Addr.	Name	Reference	De fault	Unit	Change
C5-17	0xC511	Input 2 of binary selector module F	0: Logic 0 1: Logic 1 2: Logic 0 3: DI1 4: DI2 5: DI3 6: DI4 7: DI5 8: DI6 9: DI7 10: DI8 11: DI9 12: DI10 13: DI11 14: DI12 15: DI13 16: DI14 17: DI15 18: DI21 Others: B connector	0	-	Changeable at any time
C5-18	0xC512	Input source of binary selector module G	0: Disabled 1: Logic 1 2: Logic 0 3: DI1 4: DI2 5: DI3 6: DI4 7: DI5 8: DI6 9: DI7 10: DI8 11: DI9 12: DI10 13: DI11 14: DI12 15: DI13 16: DI14 17: DI15 18: DI16 Others: B connector	0	-	Changeable at any time

Para.	Comm. Addr.	Name	Reference	De fault	Unit	Change
C5-19	0xC513	Input 1 of binary selector module G	0: Logic 0 1: Logic 1 2: Logic 0 3: DI1 4: DI2 5: DI3 6: DI4 7: DI5 8: DI6 9: DI7 10: DI8 11: DI9 12: DI10 13: DI11 14: DI12 15: DI13 16: DI14 17: DI15 18: DI16 Others: B connector	0	-	Changeable at any time
C5-20	0xC514	Input 2 of binary selector module G	0: Logic 0 1: Logic 1 2: Logic 0 3: DI1 4: DI2 5: DI3 6: DI4 7: DI5 8: DI6 9: DI7 10: DI8 11: DI9 12: DI10 13: DI11 14: DI12 15: DI13 16: DI14 17: DI15 18: DI21 Others: B connector	0	-	Changeable at any time

Para.	Comm. Addr.	Name	Reference	Default	Unit	Change
C5-21	0xC515	Input source of binary selector module H	0: Disabled 1: Logic 1 2: Logic 0 3: DI1 4: DI2 5: DI3 6: DI4 7: DI5 8: DI6 9: DI7 10: DI8 11: DI9 12: DI10 13: DI11 14: DI12 15: DI13 16: DI14 17: DI15 18: DI16 Others: B connector	0	-	Changeable at any time
C5-22	0xC516	Input 1 of binary selector module H	0: Logic 0 1: Logic 1 2: Logic 0 3: DI1 4: DI2 5: DI3 6: DI4 7: DI5 8: DI6 9: DI7 10: DI8 11: DI9 12: DI10 13: DI11 14: DI12 15: DI13 16: DI14 17: DI15 18: DI16 Others: B connector	0	-	Changeable at any time

Para.	Comm. Addr.	Name	Reference	De fault	Unit	Change
C5-23	0xC517	Input 2 of binary selector module H	0: Logic 0 1: Logic 1 2: Logic 0 3: DI1 4: DI2 5: DI3 6: DI4 7: DI5 8: DI6 9: DI7 10: DI8 11: DI9 12: DI10 13: DI11 14: DI12 15: DI13 16: DI14 17: DI15 18: DI21 Others: B connector	0	-	Changeable at any time
C5-24	0xC518	Input source of word selector module A	0: Disabled 1: Logic 1 2: Logic 0 3: DI1 4: DI2 5: DI3 6: DI4 7: DI5 8: DI6 9: DI7 10: DI8 11: DI9 12: DI10 13: DI11 14: DI12 15: DI13 16: DI14 17: DI15 18: DI16 Others: B connector	0	-	Changeable at any time
C5-25	0xC519	Input 1 of word selector module A	0: 0 Others: K connector	0	-	Changeable at any time
C5-26	0xC51A	Input 2 of word selector module A	0: 0 Others: K connector	0	-	Changeable at any time

Para.	Comm. Addr.	Name	Reference	De fault	Unit	Change
C5-27	0xC51B	Input source of word selector module B	0: Disabled 1: Logic 1 2: Logic 0 3: DI1 4: DI2 5: DI3 6: DI4 7: DI5 8: DI6 9: DI7 10: DI8 11: DI9 12: DI10 13: DI11 14: DI12 15: DI13 16: DI14 17: DI15 18: DI16 Others: B connector	0	-	Changeable at any time
C5-28	0xC51C	Input 1 of word selector module B	0: 0 Others: K connector	0	-	Changeable at any time
C5-29	0xC51D	Input 2 of word selector module B	0: 0 Others: K connector	0	-	Changeable at any time
C5-30	0xC51E	Input source of word selector module C	0: Disabled 1: Logic 1 2: Logic 0 3: DI1 4: DI2 5: DI3 6: DI4 7: DI5 8: DI6 9: DI7 10: DI8 11: DI9 12: DI10 13: DI11 14: DI12 15: DI13 16: DI14 17: DI15 18: DI16 Others: B connector	0	-	Changeable at any time
C5-31	0xC51F	Input 1 of word selector module C	0: 0 Others: K connector	0	-	Changeable at any time
C5-32	0xC520	Input 2 of word selector module C	0: 0 Others: K connector	0	-	Changeable at any time

Para.	Comm. Addr.	Name	Reference	De fault	Unit	Change
C5-33	0xC521	Input source of word selector module D	0: Disabled 1: Logic 1 2: Logic 0 3: DI1 4: DI2 5: DI3 6: DI4 7: DI5 8: DI6 9: DI7 10: DI8 11: DI9 12: DI10 13: DI11 14: DI12 15: DI13 16: DI14 17: DI15 18: DI16 Others: B connector	0	-	Changeable at any time
C5-34	0xC522	Input 1 of word selector module D	0: 0 Others: K connector	0	-	Changeable at any time
C5-35	0xC523	Input 2 of word selector module D	0: 0 Others: K connector	0	-	Changeable at any time
C5-36	0xC524	Input source of DWord selector module A	0: Disabled 1: Logic 1 2: Logic 0 3: DI1 4: DI2 5: DI3 6: DI4 7: DI5 8: DI6 9: DI7 10: DI8 11: DI9 12: DI10 13: DI11 14: DI12 15: DI13 16: DI14 17: DI15 18: DI16 Others: B connector	0	-	Changeable at any time
C5-37	0xC525	Input 1 of DWord selector module A	0: 0 Others: K connector	0	-	Changeable at any time
C5-38	0xC526	Input 2 of DWord selector module A	0: 0 Others: K connector	0	-	Changeable at any time

Para.	Comm. Addr.	Name	Reference	De fault	Unit	Change
C5-39	0xC527	Input source of DWord selector module B	0: Disabled 1: Logic 1 2: Logic 0 3: DI1 4: DI2 5: DI3 6: DI4 7: DI5 8: DI6 9: DI7 10: DI8 11: DI9 12: DI10 13: DI11 14: DI12 15: DI13 16: DI14 17: DI15 18: DI16 Others: B connector	0	-	Changeable at any time
C5-40	0xC528	Input 1 of DWord selector module B	0: 0 Others: K connector	0	-	Changeable at any time
C5-41	0xC529	Input 2 of DWord selector module B	0: 0 Others: K connector	0	-	Changeable at any time
C5-42	0xC52A	Input source of DWord selector module C	0: Disabled 1: Logic 1 2: Logic 0 3: DI1 4: DI2 5: DI3 6: DI4 7: DI5 8: DI6 9: DI7 10: DI8 11: DI9 12: DI10 13: DI11 14: DI12 15: DI13 16: DI14 17: DI15 18: DI16 Others: B connector	0	-	Changeable at any time
C5-43	0xC52B	Input 1 of DWord selector module C	0: 0 Others: K connector	0	-	Changeable at any time
C5-44	0xC52C	Input 2 of DWord selector module C	0: 0 Others: K connector	0	-	Changeable at any time

Para.	Comm. Addr.	Name	Reference	De fault	Unit	Change
C5-45	0xC52D	Input source of DWord selector module D	0: Disabled 1: Logic 1 2: Logic 0 3: DI1 4: DI2 5: DI3 6: DI4 7: DI5 8: DI6 9: DI7 10: DI8 11: DI9 12: DI10 13: DI11 14: DI12 15: DI13 16: DI14 17: DI15 18: DI16 Others: B connector	0	-	Changeable at any time
C5-46	0xC52E	Input 1 of DWord selector module D	0: 0 Others: K connector	0	-	Changeable at any time
C5-47	0xC52F	Input 2 of DWord selector module D	0: 0 Others: K connector	0	-	Changeable at any time
C5-48	0xC530	Input source of floating-point number selector module A	0: Disabled 1: Logic 1 2: Logic 0 3: DI1 4: DI2 5: DI3 6: DI4 7: DI5 8: DI6 9: DI7 10: DI8 11: DI9 12: DI10 13: DI11 14: DI12 15: DI13 16: DI14 17: DI15 18: DI16 Others: B connector	0	-	Changeable at any time

Para.	Comm. Addr.	Name	Reference	De fault	Unit	Change
C5-49	0xC531	Input 1 of floating-point number selector module A	0: 0 1: AI1 2: AI2 3: AI3 4: HDI 5: Aim 6: Multi-reference 7: Motor-driven potentiometer 8: PID Others: F connector	0	-	Changeable at any time
C5-50	0xC532	Input 2 of floating-point number selector module A	0: 0 1: AI1 2: AI2 3: AI3 4: HDI 5: Aim 6: Multi-reference 7: Motor-driven potentiometer 8: PID Others: F connector	0	-	Changeable at any time
C5-51	0xC533	Input source of floating-point number selector module B	0: Disabled 1: Logic 1 2: Logic 0 3: DI1 4: DI2 5: DI3 6: DI4 7: DI5 8: DI6 9: DI7 10: DI8 11: DI9 12: DI10 13: DI11 14: DI12 15: DI13 16: DI14 17: DI15 18: DI16 Others: B connector	0	-	Changeable at any time

Para.	Comm. Addr.	Name	Reference	De fault	Unit	Change
C5-52	0xC534	Input 1 of floating-point number selector module B	0: 0 1: AI1 2: AI2 3: AI3 4: HDI 5: Aim 6: Multi-reference 7: Motor-driven potentiometer 8: PID Others: F connector	0	-	Changeable at any time
C5-53	0xC535	Input 2 of floating-point number selector module B	0: 0 1: AI1 2: AI2 3: AI3 4: HDI 5: Aim 6: Multi-reference 7: Motor-driven potentiometer 8: PID Others: F connector	0	-	Changeable at any time
C5-54	0xC536	Input source of floating-point number selector module C	0: Disabled 1: Logic 1 2: Logic 0 3: DI1 4: DI2 5: DI3 6: DI4 7: DI5 8: DI6 9: DI7 10: DI8 11: DI9 12: DI10 13: DI11 14: DI12 15: DI13 16: DI14 17: DI15 18: DI16 Others: B connector	0	-	Changeable at any time

Para.	Comm. Addr.	Name	Reference	Default	Unit	Change
C5-55	0xC537	Input 1 of floating-point number selector module C	0: 0 1: AI1 2: AI2 3: AI3 4: HDI 5: Aim 6: Multi-reference 7: Motor-driven potentiometer 8: PID Others: F connector	0	-	Changeable at any time
C5-56	0xC538	Input 2 of floating-point number selector module C	0: 0 1: AI1 2: AI2 3: AI3 4: HDI 5: Aim 6: Multi-reference 7: Motor-driven potentiometer 8: PID Others: F connector	0	-	Changeable at any time
C5-57	0xC539	Input source of floating-point number selector module D	0: Disabled 1: Logic 1 2: Logic 0 3: DI1 4: DI2 5: DI3 6: DI4 7: DI5 8: DI6 9: DI7 10: DI8 11: DI9 12: DI10 13: DI11 14: DI12 15: DI13 16: DI14 17: DI15 18: DI16 Others: B connector	0	-	Changeable at any time

Para.	Comm. Addr.	Name	Reference	De fault	Unit	Change
C5-58	0xC53A	Input 1 of floating-point number selector module D	0: 0 1: AI1 2: AI2 3: AI3 4: HDI 5: Aim 6: Multi-reference 7: Motor-driven potentiometer 8: PID Others: F connector	0	-	Changeable at any time
C5-59	0xC53B	Input 2 of floating-point number selector module D	0: 0 1: AI1 2: AI2 3: AI3 4: HDI 5: Aim 6: Multi-reference 7: Motor-driven potentiometer 8: PID Others: F connector	0	-	Changeable at any time
C5-60	0xC53C	Input source of floating-point number selector module E	0: Disabled 1: Logic 1 2: Logic 0 3: DI1 4: DI2 5: DI3 6: DI4 7: DI5 8: DI6 9: DI7 10: DI8 11: DI9 12: DI10 13: DI11 14: DI12 15: DI13 16: DI14 17: DI15 18: DI16 Others: B connector	0	-	Changeable at any time

Para.	Comm. Addr.	Name	Reference	Default	Unit	Change
C5-61	0xC53D	Input 1 of floating-point number selector module E	0: 0 1: AI1 2: AI2 3: AI3 4: HDI 5: Aim 6: Multi-reference 7: Motor-driven potentiometer 8: PID Others: F connector	0	-	Changeable at any time
C5-62	0xC53E	Input 2 of floating-point number selector module E	0: 0 1: AI1 2: AI2 3: AI3 4: HDI 5: Aim 6: Multi-reference 7: Motor-driven potentiometer 8: PID Others: F connector	0	-	Changeable at any time
C5-63	0xC53F	Input source of floating-point number selector module F	0: Disabled 1: Logic 1 2: Logic 0 3: DI1 4: DI2 5: DI3 6: DI4 7: DI5 8: DI6 9: DI7 10: DI8 11: DI9 12: DI10 13: DI11 14: DI12 15: DI13 16: DI14 17: DI15 18: DI16 Others: B connector	0	-	Changeable at any time

Para.	Comm. Addr.	Name	Reference	Default	Unit	Change
C5-64	0xC540	Input 1 of floating-point number selector module F	0: 0 1: AI1 2: AI2 3: AI3 4: HDI 5: Aim 6: Multi-reference 7: Motor-driven potentiometer 8: PID Others: F connector	0	-	Changeable at any time
C5-65	0xC541	Input 2 of floating-point number selector module F	0: 0 1: AI1 2: AI2 3: AI3 4: HDI 5: Aim 6: Multi-reference 7: Motor-driven potentiometer 8: PID Others: F connector	0	-	Changeable at any time
C5-66	0xC542	Input source of floating-point number selector module G	0: Disabled 1: Logic 1 2: Logic 0 3: DI1 4: DI2 5: DI3 6: DI4 7: DI5 8: DI6 9: DI7 10: DI8 11: DI9 12: DI10 13: DI11 14: DI12 15: DI13 16: DI14 17: DI15 18: DI16 Others: B connector	0	-	Changeable at any time

Para.	Comm. Addr.	Name	Reference	De fault	Unit	Change
C5-67	0xC543	Input 1 of floating-point number selector module G	0: 0 1: AI1 2: AI2 3: AI3 4: HDI 5: Aim 6: Multi-reference 7: Motor-driven potentiometer 8: PID Others: F connector	0	-	Changeable at any time
C5-68	0xC544	Input 2 of floating-point number selector module G	0: 0 1: AI1 2: AI2 3: AI3 4: HDI 5: Aim 6: Multi-reference 7: Motor-driven potentiometer 8: PID Others: F connector	0	-	Changeable at any time
C5-69	0xC545	Input source of floating-point number selector module H	0: Disabled 1: Logic 1 2: Logic 0 3: DI1 4: DI2 5: DI3 6: DI4 7: DI5 8: DI6 9: DI7 10: DI8 11: DI9 12: DI10 13: DI11 14: DI12 15: DI13 16: DI14 17: DI15 18: DI16 Others: B connector	0	-	Changeable at any time

Para.	Comm. Addr.	Name	Reference	Default	Unit	Change
C5-70	0xC546	Input 1 of floating-point number selector module H	0: 0 1: AI1 2: AI2 3: AI3 4: HDI 5: Aim 6: Multi-reference 7: Motor-driven potentiometer 8: PID Others: F connector	0	-	Changeable at any time
C5-71	0xC547	Input 2 of floating-point number selector module H	0: 0 1: AI1 2: AI2 3: AI3 4: HDI 5: Aim 6: Multi-reference 7: Motor-driven potentiometer 8: PID Others: F connector	0	-	Changeable at any time
C6-00	0xC600	Floating-point filter module A enable	0: Module disabled 1: Filter disabled 2: Filter enabled 3: DI1 4: DI2 5: DI3 6: DI4 7: DI5 8: DI6 9: DI7 10: DI8 11: DI9 12: DI10 13: DI11 14: DI12 15: DI13 16: DI14 17: DI15 18: DI16 Others: B connector	0	-	Changeable at any time

Para.	Comm. Addr.	Name	Reference	De fault	Unit	Change
C6-01	0xC601	Input of floating-point filter module A	0: 0 1: AI1 2: AI2 3: AI3 4: HDI 5: Aim 6: Multi-reference 7: Motor-driven potentiometer 8: PID Others: F connector	0	-	Changeable at any time
C6-02	0xC602	Filter time of filter module A	0.000s to 65.535s	0.000	s	Changeable at any time
C6-03	0xC603	Floating-point filter module B enable	0: Module disabled 1: Filter disabled 2: Filter enabled 3: DI1 4: DI2 5: DI3 6: DI4 7: DI5 8: DI6 9: DI7 10: DI8 11: DI9 12: DI10 13: DI11 14: DI12 15: DI13 16: DI14 17: DI15 18: DI16 Others: B connector	0	-	Changeable at any time
C6-04	0xC604	Input of floating-point filter module B	0: 0 1: AI1 2: AI2 3: AI3 4: HDI 5: Aim 6: Multi-reference 7: Motor-driven potentiometer 8: PID Others: F connector	0	-	Changeable at any time
C6-05	0xC605	Filter time of filter module B	0.000s to 65.535s	0.000	s	Changeable at any time

Para.	Comm. Addr.	Name	Reference	Default	Unit	Change
C6-06	0xC606	Floating-point filter module C enable	0: Module disabled 1: Filter disabled 2: Filter enabled 3: DI1 4: DI2 5: DI3 6: DI4 7: DI5 8: DI6 9: DI7 10: DI8 11: DI9 12: DI10 13: DI11 14: DI12 15: DI13 16: DI14 17: DI15 18: DI16 Others: B connector	0	-	Changeable at any time
C6-07	0xC607	Input of floating-point filter module C	0: 0 1: AI1 2: AI2 3: AI3 4: HDI 5: Aim 6: Multi-reference 7: Motor-driven potentiometer 8: PID Others: F connector	0	-	Changeable at any time
C6-08	0xC608	Filter time of filter module C	0.000s to 65.535s	0.000	s	Changeable at any time

Para.	Comm. Addr.	Name	Reference	Default	Unit	Change
C6-09	0xC609	Floating-point filter module D enable	0: Module disabled 1: Filter disabled 2: Filter enabled 3: DI1 4: DI2 5: DI3 6: DI4 7: DI5 8: DI6 9: DI7 10: DI8 11: DI9 12: DI10 13: DI11 14: DI12 15: DI13 16: DI14 17: DI15 18: DI16 Others: B connector	0	-	Changeable at any time
C6-10	0xC60A	Input of floating-point filter module D	0: 0 1: AI1 2: AI2 3: AI3 4: HDI 5: Aim 6: Multi-reference 7: Motor-driven potentiometer 8: PID Others: F connector	0	-	Changeable at any time
C6-11	0xC60B	Filter time of filter module D	0.000s to 65.535s	0.000	s	Changeable at any time

Para.	Comm. Addr.	Name	Reference	Default	Unit	Change
C6-12	0xC60C	Fixed-point filter module E enable	0: Module disabled 1: Filter disabled 2: Filter enabled 3: DI1 4: DI2 5: DI3 6: DI4 7: DI5 8: DI6 9: DI7 10: DI8 11: DI9 12: DI10 13: DI11 14: DI12 15: DI13 16: DI14 17: DI15 18: DI16 Others: B connector	0	-	Changeable at any time
C6-13	0xC60D	Input of fixed-point filter module E	0: 0 Others: K connector	0	-	Changeable at any time
C6-14	0xC60E	Filter time of fixed-point filter module E	0.000s to 65.535s	0.000	s	Changeable at any time
C6-15	0xC60F	Fixed-point filter module F enable	0: Module disabled 1: Filter disabled 2: Filter enabled 3: DI1 4: DI2 5: DI3 6: DI4 7: DI5 8: DI6 9: DI7 10: DI8 11: DI9 12: DI10 13: DI11 14: DI12 15: DI13 16: DI14 17: DI15 18: DI16 Others: B connector	0	-	Changeable at any time
C6-16	0xC610	Input of fixed-point filter module F	0: 0 Others: K connector	0	-	Changeable at any time

Para.	Comm. Addr.	Name	Reference	De fault	Unit	Change
C6-17	0xC611	Filter time of fixed-point filter module F	0.000s to 65.535s	0.000	s	Changeable at any time
C6-24	0xC618	Function of level-to-pulse conversion module A	0: Disabled 1: Conversion from level to pulse 2: Conversion from pulse to level	0	-	Changeable at any time
C6-25	0xC619	Input of level-to-pulse conversion module A	0: Logic 0 1: Logic 1 2: Logic 0 3: DI1 4: DI2 5: DI3 6: DI4 7: DI5 8: DI6 9: DI7 10: DI8 11: DI9 12: DI10 13: DI11 14: DI12 15: DI13 16: DI14 17: DI15 18: DI16 Others: B connector	0	-	Changeable at any time
C6-26	0xC61A	Pulse width of level-to-pulse conversion module A	0.00s to 655.35s	0.00	s	Changeable at any time
C6-27	0xC61B	Function of level-to-pulse conversion module B	0: Disabled 1: Conversion from level to pulse 2: Conversion from pulse to level	0	-	Changeable at any time

Para.	Comm. Addr.	Name	Reference	De fault	Unit	Change
C6-28	0xC61C	Input of level-to-pulse conversion module B	0: Logic 0 1: Logic 1 2: Logic 0 3: DI1 4: DI2 5: DI3 6: DI4 7: DI5 8: DI6 9: DI7 10: DI8 11: DI9 12: DI10 13: DI11 14: DI12 15: DI13 16: DI14 17: DI15 18: DI16 Others: B connector	0	-	Changeable at any time
C6-29	0xC61D	Pulse width of level-to-pulse conversion module B	0.00s to 655.35s	0.00	s	Changeable at any time
C6-30	0xC61E	Function of level-to-pulse conversion module C	0: Disabled 1: Conversion from level to pulse 2: Conversion from pulse to level	0	-	Changeable at any time
C6-31	0xC61F	Input of level-to-pulse conversion module C	0: Logic 0 1: Logic 1 2: Logic 0 3: DI1 4: DI2 5: DI3 6: DI4 7: DI5 8: DI6 9: DI7 10: DI8 11: DI9 12: DI10 13: DI11 14: DI12 15: DI13 16: DI14 17: DI15 18: DI16 Others: B connector	0	-	Changeable at any time

Para.	Comm. Addr.	Name	Reference	De fault	Unit	Change
C6-32	0xC620	Pulse width of level-to-pulse conversion module C	0.00s to 655.35s	0.00	s	Changeable at any time
C6-33	0xC621	Function of level-to-pulse conversion module D	0: Disabled 1: Conversion from level to pulse 2: Conversion from pulse to level	0	-	Changeable at any time
C6-34	0xC622	Input of level-to-pulse conversion module D	0: Logic 0 1: Logic 1 2: Logic 0 3: DI1 4: DI2 5: DI3 6: DI4 7: DI5 8: DI6 9: DI7 10: DI8 11: DI9 12: DI10 13: DI11 14: DI12 15: DI13 16: DI14 17: DI15 18: DI16 Others: B connector	0	-	Changeable at any time
C6-35	0xC623	Pulse width of level-to-pulse conversion module D	0.00s to 655.35s	0.00	s	Changeable at any time
C6-36	0xC624	Input of floating-point limiting module A	0: Disabled 1: AI1 2: AI2 3: AI3 4: HDI 5: Aim 6: Multi-reference 7: Motor-driven potentiometer 8: PID Others: F connector	0	-	Changeable at any time

Para.	Comm. Addr.	Name	Reference	De fault	Unit	Change
C6-37	0xC625	Upper limit of floating-point limiting module A	0: Inactive 1: AI1 2: AI2 3: AI3 4: HDI 5: Aim 6: Multi-reference 7: Motor-driven potentiometer 8: PID Others: F connector	0	-	Changeable at any time
C6-38	0xC626	Lower limit of floating-point limiting module A	0: Inactive 1: AI1 2: AI2 3: AI3 4: HDI 5: Aim 6: Multi-reference 7: Motor-driven potentiometer 8: PID Others: F connector	0	-	Changeable at any time
C6-39	0xC627	Input of floating-point limiting module B	0: Disabled 1: AI1 2: AI2 3: AI3 4: HDI 5: Aim 6: Multi-reference 7: Motor-driven potentiometer 8: PID Others: F connector	0	-	Changeable at any time
C6-40	0xC628	Upper limit of floating-point limiting module B	0: Inactive 1: AI1 2: AI2 3: AI3 4: HDI 5: Aim 6: Multi-reference 7: Motor-driven potentiometer 8: PID Others: F connector	0	-	Changeable at any time

Para.	Comm. Addr.	Name	Reference	De fault	Unit	Change
C6-41	0xC629	Lower limit of floating-point limiting module B	0: Inactive 1: AI1 2: AI2 3: AI3 4: HDI 5: Aim 6: Multi-reference 7: Motor-driven potentiometer 8: PID Others: F connector	0	-	Changeable at any time
C6-42	0xC62A	Input of floating-point limiting module C	0: Disabled 1: AI1 2: AI2 3: AI3 4: HDI 5: Aim 6: Multi-reference 7: Motor-driven potentiometer 8: PID Others: F connector	0	-	Changeable at any time
C6-43	0xC62B	Upper limit of floating-point limiting module C	0: Inactive 1: AI1 2: AI2 3: AI3 4: HDI 5: Aim 6: Multi-reference 7: Motor-driven potentiometer 8: PID Others: F connector	0	-	Changeable at any time
C6-44	0xC62C	Lower limit of floating-point limiting module C	0: Inactive 1: AI1 2: AI2 3: AI3 4: HDI 5: Aim 6: Multi-reference 7: Motor-driven potentiometer 8: PID Others: F connector	0	-	Changeable at any time

Para.	Comm. Addr.	Name	Reference	De fault	Unit	Change
C6-45	0xC62D	Input of floating-point limiting module D	0: Disabled 1: AI1 2: AI2 3: AI3 4: HDI 5: Aim 6: Multi-reference 7: Motor-driven potentiometer 8: PID Others: F connector	0	-	Changeable at any time
C6-46	0xC62E	Upper limit of floating-point limiting module D	0: Inactive 1: AI1 2: AI2 3: AI3 4: HDI 5: Aim 6: Multi-reference 7: Motor-driven potentiometer 8: PID Others: F connector	0	-	Changeable at any time
C6-47	0xC62F	Lower limit of floating-point limiting module D	0: Inactive 1: AI1 2: AI2 3: AI3 4: HDI 5: Aim 6: Multi-reference 7: Motor-driven potentiometer 8: PID Others: F connector	0	-	Changeable at any time
C6-48	0xC630	Input of fixed-point limiting module E	0: Disabled Others: K connector	0	-	Changeable at any time
C6-49	0xC631	Upper limit of fixed-point limiting module E	0: Inactive Others: K connector	0	-	Changeable at any time
C6-50	0xC632	Lower limit of fixed-point limiting module E	0: Inactive Others: K connector	0	-	Changeable at any time
C6-51	0xC633	Input of fixed-point limiting module F	0: Disabled Others: K connector	0	-	Changeable at any time
C6-52	0xC634	Upper limit of fixed-point limiting module F	0: Inactive Others: K connector	0	-	Changeable at any time
C6-53	0xC635	Lower limit of fixed-point limiting module F	0: Inactive Others: K connector	0	-	Changeable at any time

Para.	Comm. Addr.	Name	Reference	De fault	Unit	Change
C6-54	0xC636	Input of logic delay module A	0: Disabled 1: Logic 1 2: Logic 0 3: DI1 4: DI2 5: DI3 6: DI4 7: DI5 8: DI6 9: DI7 10: DI8 11: DI9 12: DI10 13: DI11 14: DI12 15: DI13 16: DI14 17: DI15 18: DI16 Others: B connector	0	-	Changeable at any time
C6-55	0xC637	Switch-on delay of logic delay module A	0 to 65535	0	-	Changeable at any time
C6-56	0xC638	Switch-off delay of logic delay module A	0 to 65535	0	-	Changeable at any time
C6-57	0xC639	Delay time unit of logic delay module A	0: No delay 1: 10 ms 10: 100 ms 100: 1s 1000: 10s 6000: 1 min 12000: 2 min 0: Added at the background	1	-	Changeable at any time

Para.	Comm. Addr.	Name	Reference	De fault	Unit	Change
C6-58	0xC63A	Input of logic delay module B	0: Disabled 1: Logic 1 2: Logic 0 3: DI1 4: DI2 5: DI3 6: DI4 7: DI5 8: DI6 9: DI7 10: DI8 11: DI9 12: DI10 13: DI11 14: DI12 15: DI13 16: DI14 17: DI15 18: DI16 Others: B connector	0	-	Changeable at any time
C6-59	0xC63B	Switch-on delay of logic delay module B	0 to 65535	0	-	Changeable at any time
C6-60	0xC63C	Switch-off delay of logic delay module B	0 to 65535	0	-	Changeable at any time
C6-61	0xC63D	Delay time unit of logic delay module B	0: No delay 1: 10 ms 10: 100 ms 100: 1s 1000: 10s 6000: 1 min 12000: 2 min 0: Added at the background	1	-	Changeable at any time

Para.	Comm. Addr.	Name	Reference	De fault	Unit	Change
C6-62	0xC63E	Input of logic delay module C	0: Disabled 1: Logic 1 2: Logic 0 3: DI1 4: DI2 5: DI3 6: DI4 7: DI5 8: DI6 9: DI7 10: DI8 11: DI9 12: DI10 13: DI11 14: DI12 15: DI13 16: DI14 17: DI15 18: DI16 Others: B connector	0	-	Changeable at any time
C6-63	0xC63F	Switch-on delay of logic delay module C	0 to 65535	0	-	Changeable at any time
C6-64	0xC640	Switch-off delay of logic delay module C	0 to 65535	0	-	Changeable at any time
C6-65	0xC641	Delay time unit of logic delay module C	0: No delay 1: 10 ms 10: 100 ms 100: 1s 1000: 10s 6000: 1 min 12000: 2 min 0: Added at the background	1	-	Changeable at any time

Para.	Comm. Addr.	Name	Reference	De fault	Unit	Change
C6-66	0xC642	Input of logic delay module D	0: Disabled 1: Logic 1 2: Logic 0 3: DI1 4: DI2 5: DI3 6: DI4 7: DI5 8: DI6 9: DI7 10: DI8 11: DI9 12: DI10 13: DI11 14: DI12 15: DI13 16: DI14 17: DI15 18: DI16 Others: B connector	0	-	Changeable at any time
C6-67	0xC643	Switch-on delay of logic delay module D	0 to 65535	0	-	Changeable at any time
C6-68	0xC644	Switch-off delay of logic delay module D	0 to 65535	0	-	Changeable at any time
C6-69	0xC645	Delay time unit of logic delay module D	0: No delay 1: 10 ms 10: 100 ms 100: 1s 1000: 10s 6000: 1 min 12000: 2 min 0: Added at the background	1	-	Changeable at any time

Para.	Comm. Addr.	Name	Reference	De fault	Unit	Change
C6-70	0xC646	Input of logic delay module E	0: Disabled 1: Logic 1 2: Logic 0 3: DI1 4: DI2 5: DI3 6: DI4 7: DI5 8: DI6 9: DI7 10: DI8 11: DI9 12: DI10 13: DI11 14: DI12 15: DI13 16: DI14 17: DI15 18: DI16 Others: B connector	0	-	Changeable at any time
C6-71	0xC647	Switch-on delay of logic delay module E	0 to 65535	0	-	Changeable at any time
C6-72	0xC648	Switch-off delay of logic delay module E	0 to 65535	0	-	Changeable at any time
C6-73	0xC649	Delay time unit of logic delay module E	0: No delay 1: 10 ms 10: 100 ms 100: 1s 1000: 10s 6000: 1 min 12000: 2 min 0: Added at the background	1	-	Changeable at any time

Para.	Comm. Addr.	Name	Reference	Default	Unit	Change
C6-74	0xC64A	Input of logic delay module F	0: Disabled 1: Logic 1 2: Logic 0 3: DI1 4: DI2 5: DI3 6: DI4 7: DI5 8: DI6 9: DI7 10: DI8 11: DI9 12: DI10 13: DI11 14: DI12 15: DI13 16: DI14 17: DI15 18: DI16 Others: B connector	0	-	Changeable at any time
C6-75	0xC64B	Switch-on delay of logic delay module F	0 to 65535	0	-	Changeable at any time
C6-76	0xC64C	Switch-off delay of logic delay module F	0 to 65535	0	-	Changeable at any time
C6-77	0xC64D	Delay time unit of logic delay module F	0: No delay 1: 10 ms 10: 100 ms 100: 1s 1000: 10s 6000: 1 min 12000: 2 min 0: Added at the background	1	-	Changeable at any time

Para.	Comm. Addr.	Name	Reference	De fault	Unit	Change
C6-78	0xC64E	Input of logic delay module G	0: Disabled 1: Logic 1 2: Logic 0 3: DI1 4: DI2 5: DI3 6: DI4 7: DI5 8: DI6 9: DI7 10: DI8 11: DI9 12: DI10 13: DI11 14: DI12 15: DI13 16: DI14 17: DI15 18: DI16 Others: B connector	0	-	Changeable at any time
C6-79	0xC64F	Switch-on delay of logic delay module G	0 to 65535	0	-	Changeable at any time
C6-80	0xC650	Switch-off delay of logic delay module G	0 to 65535	0	-	Changeable at any time
C6-81	0xC651	Delay time unit of logic delay module G	0: No delay 1: 10 ms 10: 100 ms 100: 1s 1000: 10s 6000: 1 min 12000: 2 min 0: Added at the background	1	-	Changeable at any time

Para.	Comm. Addr.	Name	Reference	De fault	Unit	Change
C6-82	0xC652	Input of logic delay module H	0: Disabled 1: Logic 1 2: Logic 0 3: DI1 4: DI2 5: DI3 6: DI4 7: DI5 8: DI6 9: DI7 10: DI8 11: DI9 12: DI10 13: DI11 14: DI12 15: DI13 16: DI14 17: DI15 18: DI16 Others: B connector	0	-	Changeable at any time
C6-83	0xC653	Switch-on delay of logic delay module H	0 to 65535	0	-	Changeable at any time
C6-84	0xC654	Switch-off delay of logic delay module H	0 to 65535	0	-	Changeable at any time
C6-85	0xC655	Delay time unit of logic delay module H	0: No delay 1: 10 ms 10: 100 ms 100: 1s 1000: 10s 6000: 1 min 12000: 2 min 0: Added at the background	1	-	Changeable at any time
C7-00	0xC700	Input of multi-point curve module A	0: Disabled Others: F connector	0	-	Changeable at any time
C7-01	0xC701	Setpoint X1 of multi-point curve module A	–600% to +600.0%	0.0	%	Changeable at any time
C7-02	0xC702	Setpoint X2 of multi-point curve module A	–600% to +600.0%	0.0	%	Changeable at any time
C7-03	0xC703	Setpoint X3 of multi-point curve module A	–600% to +600.0%	0.0	%	Changeable at any time
C7-04	0xC704	Setpoint X4 of multi-point curve module A	–600% to +600.0%	0.0	%	Changeable at any time

Para.	Comm. Addr.	Name	Reference	De fault	Unit	Change
C7-05	0xC705	Setpoint X5 of multi-point curve module A	–600% to +600.0%	0.0	%	Changeable at any time
C7-06	0xC706	Setpoint X6 of multi-point curve module A	–600% to +600.0%	0.0	%	Changeable at any time
C7-07	0xC707	Setpoint X7 of multi-point curve module A	–600% to +600.0%	0.0	%	Changeable at any time
C7-08	0xC708	Setpoint X8 of multi-point curve module A	–600% to +600.0%	0.0	%	Changeable at any time
C7-09	0xC709	Setpoint X9 of multi-point curve module A	–600% to +600.0%	0.0	%	Changeable at any time
C7-10	0xC70A	Setpoint X10 of multi-point curve module A	–600% to +600.0%	0.0	%	Changeable at any time
C7-11	0xC70B	Setpoint Y1 of multi-point curve module A	–600% to +600.0%	0.0	%	Changeable at any time
C7-12	0xC70C	Setpoint Y2 of multi-point curve module A	–600% to +600.0%	0.0	%	Changeable at any time
C7-13	0xC70D	Setpoint Y3 of multi-point curve module A	–600% to +600.0%	0.0	%	Changeable at any time
C7-14	0xC70E	Setpoint Y4 of multi-point curve module A	–600% to +600.0%	0.0	%	Changeable at any time
C7-15	0xC70F	Setpoint Y5 of multi-point curve module A	–600% to +600.0%	0.0	%	Changeable at any time
C7-16	0xC710	Setpoint Y6 of multi-point curve module A	–600% to +600.0%	0.0	%	Changeable at any time
C7-17	0xC711	Setpoint Y7 of multi-point curve module A	–600% to +600.0%	0.0	%	Changeable at any time
C7-18	0xC712	Setpoint Y8 of multi-point curve module A	–600% to +600.0%	0.0	%	Changeable at any time
C7-19	0xC713	Setpoint Y9 of multi-point curve module A	–600% to +600.0%	0.0	%	Changeable at any time

Para.	Comm. Addr.	Name	Reference	De fault	Unit	Change
C7-20	0xC714	Setpoint Y10 of multi-point curve module A	–600% to +600.0%	0.0	%	Changeable at any time
C7-21	0xC715	Input of multi-point curve module B	0: Disabled Others: F connector	0	-	Changeable at any time
C7-22	0xC716	Setpoint X1 of multi-point curve module B	–600% to +600.0%	0.0	%	Changeable at any time
C7-23	0xC717	Setpoint X2 of multi-point curve module B	–600% to +600.0%	0.0	%	Changeable at any time
C7-24	0xC718	Setpoint X3 of multi-point curve module B	–600% to +600.0%	0.0	%	Changeable at any time
C7-25	0xC719	Setpoint X4 of multi-point curve module B	–600% to +600.0%	0.0	%	Changeable at any time
C7-26	0xC71A	Setpoint X5 of multi-point curve module B	–600% to +600.0%	0.0	%	Changeable at any time
C7-27	0xC71B	Setpoint X6 of multi-point curve module B	–600% to +600.0%	0.0	%	Changeable at any time
C7-28	0xC71C	Setpoint X7 of multi-point curve module B	–600% to +600.0%	0.0	%	Changeable at any time
C7-29	0xC71D	Setpoint X8 of multi-point curve module B	–600% to +600.0%	0.0	%	Changeable at any time
C7-30	0xC71E	Setpoint X9 of multi-point curve module B	–600% to +600.0%	0.0	%	Changeable at any time
C7-31	0xC71F	Setpoint X10 of multi-point curve module B	–600% to +600.0%	0.0	%	Changeable at any time
C7-32	0xC720	Setpoint Y1 of multi-point curve module B	–600% to +600.0%	0.0	%	Changeable at any time
C7-33	0xC721	Setpoint Y2 of multi-point curve module B	–600% to +600.0%	0.0	%	Changeable at any time
C7-34	0xC722	Setpoint Y3 of multi-point curve module B	–600% to +600.0%	0.0	%	Changeable at any time
C7-35	0xC723	Setpoint Y4 of multi-point curve module B	–600% to +600.0%	0.0	%	Changeable at any time

Para.	Comm. Addr.	Name	Reference	De fault	Unit	Change
C7-36	0xC724	Setpoint Y5 of multi-point curve module B	–600% to +600.0%	0.0	%	Changeable at any time
C7-37	0xC725	Setpoint Y6 of multi-point curve module B	–600% to +600.0%	0.0	%	Changeable at any time
C7-38	0xC726	Setpoint Y7 of multi-point curve module B	–600% to +600.0%	0.0	%	Changeable at any time
C7-39	0xC727	Setpoint Y8 of multi-point curve module B	–600% to +600.0%	0.0	%	Changeable at any time
C7-40	0xC728	Setpoint Y9 of multi-point curve module B	–600% to +600.0%	0.0	%	Changeable at any time
C7-41	0xC729	Setpoint Y10 of multi-point curve module B	–600% to +600.0%	0.0	%	Changeable at any time
C8-00	0xC800	Constant setpoint 1	–300% to +300.00%	0.00	%	Changeable at any time
C8-01	0xC801	Constant setpoint 2	–300% to +300.00%	100.00	%	Changeable at any time
C8-02	0xC802	Constant setpoint 3	–300% to +300.00%	–100	%	Changeable at any time
C8-03	0xC803	Constant setpoint 4	–300% to +300.00%	200.00	%	Changeable at any time
C8-04	0xC804	Constant setpoint 5	–300% to +300.00%	–200	%	Changeable at any time
C8-05	0xC805	Constant setpoint 6	–3000% to +3000.0%	0.0	%	Changeable at any time
C8-06	0xC806	Constant setpoint 7	–3000% to +3000.0%	0.0	%	Changeable at any time
C8-07	0xC807	Constant setpoint 8	–3000% to +3000.0%	0.0	%	Changeable at any time
C8-08	0xC808	Constant setpoint 9	–3000% to +3000.0%	0.0	%	Changeable at any time
C8-09	0xC809	Constant setpoint 10	–3000% to +3000.0%	0.0	%	Changeable at any time
C8-10	0xC80A	Constant setpoint 11	–3000% to +3000.0%	0.0	%	Changeable at any time
C8-11	0xC80B	Constant setpoint 12	–3000% to +3000.0%	0.0	%	Changeable at any time
C8-12	0xC80C	Constant setpoint 13	–3000% to +3000.0%	0.0	%	Changeable at any time

Para.	Comm. Addr.	Name	Reference	De fault	Unit	Change
C8-13	0xC80D	Constant setpoint 14	–3000% to +3000.0%	0.0	%	Changeable at any time
C8-14	0xC80E	Constant setpoint 15	–3000% to +3000.0%	0.0	%	Changeable at any time
C8-15	0xC80F	Constant setpoint 16	–3000% to +3000.0%	0.0	%	Changeable at any time
C8-16	0xC810	Constant setpoint 17	–3000% to +3000.0%	0.0	%	Changeable at any time
C8-17	0xC811	Constant setpoint 18	–3000% to +3000.0%	0.0	%	Changeable at any time
C8-18	0xC812	Constant setpoint 19	–3000% to +3000.0%	0.0	%	Changeable at any time
C8-19	0xC813	Constant setpoint 20	–3000% to +3000.0%	0.0	%	Changeable at any time
C8-20	0xC814	Constant setpoint 21	–3000% to +3000.0%	0.0	%	Changeable at any time
C8-21	0xC815	Constant setpoint 22	–300% to +300.00%	0.00	%	Changeable at any time
C8-22	0xC816	Constant setpoint 23	–300% to +300.00%	100.00	%	Changeable at any time
C8-23	0xC817	Constant setpoint 24	–300% to +300.00%	–100	%	Changeable at any time
C8-24	0xC818	Constant setpoint 25	–300% to +300.00%	200.00	%	Changeable at any time
C8-25	0xC819	Constant setpoint 26	–300% to +300.00%	–200	%	Changeable at any time
C8-26	0xC81A	Constant setpoint 27	0 to 65535	0	-	Changeable at any time
C8-27	0xC81B	Constant setpoint 28	0 to 65535	0	-	Changeable at any time
C8-28	0xC81C	Constant setpoint 29	0 to 65535	0	-	Changeable at any time
C8-29	0xC81D	Constant setpoint 30	0 to 65535	0	-	Changeable at any time
C8-30	0xC81E	Constant setpoint 31	0 to 65535	0	-	Changeable at any time
C8-31	0xC81F	Constant setpoint 32	0 to 65535	0	-	Changeable at any time
C8-32	0xC820	Constant setpoint 33	0 to 65535	0	-	Changeable at any time
C8-33	0xC821	Constant setpoint 34	0 to 65535	0	-	Changeable at any time
C8-34	0xC822	Constant setpoint 35	0 to 65535	0	-	Changeable at any time

Para.	Comm. Addr.	Name	Reference	De fault	Unit	Change
C8-35	0xC823	Constant setpoint 36	0 to 65535	0	-	Changeable at any time
C8-36	0xC824	Constant setpoint 37	0 to 65535	0	-	Changeable at any time
C8-37	0xC825	Constant setpoint 38	0 to 65535	0	-	Changeable at any time
C8-38	0xC826	Constant setpoint 39	0 to 65535	0	-	Changeable at any time
C8-39	0xC827	Constant setpoint 40	0 to 65535	0	-	Changeable at any time
C8-40	0xC828	Constant setpoint 41	0 to 65535	0	-	Changeable at any time
C8-41	0xC829	Constant setpoint 42	0 to 65535	0	-	Changeable at any time
C9-00	0xC900	LOWORD of 16-bit data RAM address 1	0x0 to 0xFFFF	0x0	-	Changeable at any time
C9-01	0xC901	HIWORD of 16-bit data RAM address 1	0x0 to 0xFFFF	0x0	-	Changeable at any time
C9-02	0xC902	LOWORD of 16-bit data RAM address 2	0x0 to 0xFFFF	0x0	-	Changeable at any time
C9-03	0xC903	HIWORD of 16-bit data RAM address 2	0x0 to 0xFFFF	0x0	-	Changeable at any time
C9-04	0xC904	LOWORD of 16-bit data RAM address 3	0x0 to 0xFFFF	0x0	-	Changeable at any time
C9-05	0xC905	HIWORD of 16-bit data RAM address 3	0x0 to 0xFFFF	0x0	-	Changeable at any time
C9-06	0xC906	LOWORD of 16-bit data RAM address 4	0x0 to 0xFFFF	0x0	-	Changeable at any time
C9-07	0xC907	HIWORD of 16-bit data RAM address 4	0x0 to 0xFFFF	0x0	-	Changeable at any time
C9-08	0xC908	LOWORD of 16-bit data RAM address 5	0x0 to 0xFFFF	0x0	-	Changeable at any time
C9-09	0xC909	HIWORD of 16-bit data RAM address 5	0x0 to 0xFFFF	0x0	-	Changeable at any time
C9-10	0xC90A	32-bit data type selection 1	0 to 1	0	-	Changeable at any time
C9-11	0xC90B	32-bit data amplification coefficient 1	0 to 10000	0	-	Changeable at any time
C9-12	0xC90C	LOWORD of 32-bit data RAM address 1	0x0 to 0xFFFF	0x0	-	Changeable at any time
C9-13	0xC90D	HIWORD of 32-bit data RAM address 1	0x0 to 0xFFFF	0x0	-	Changeable at any time

Para.	Comm. Addr.	Name	Reference	De fault	Unit	Change
C9-14	0xC90E	32-bit data type selection 2	0 to 1	0	-	Changeable at any time
C9-15	0xC90F	32-bit data amplification coefficient 2	0 to 10000	0	-	Changeable at any time
C9-16	0xC910	LOWORD of 32-bit data RAM address 2	0x0 to 0xFFFF	0x0	-	Changeable at any time
C9-17	0xC911	HIWORD of 32-bit data RAM address 2	0x0 to 0xFFFF	0x0	-	Changeable at any time
C9-18	0xC912	32-bit data type selection 3	0 to 1	0	-	Changeable at any time
C9-19	0xC913	32-bit data amplification coefficient 3	0 to 10000	0	-	Changeable at any time
C9-20	0xC914	LOWORD of 32-bit data RAM address 3	0x0 to 0xFFFF	0x0	-	Changeable at any time
C9-21	0xC915	HIWORD of 32-bit data RAM address 3	0x0 to 0xFFFF	0x0	-	Changeable at any time
C9-22	0xC916	32-bit data type selection 4	0 to 1	0	-	Changeable at any time
C9-23	0xC917	32-bit data amplification coefficient 4	0 to 10000	0	-	Changeable at any time
C9-24	0xC918	LOWORD of 32-bit data RAM address 4	0x0 to 0xFFFF	0x0	-	Changeable at any time
C9-25	0xC919	HIWORD of 32-bit data RAM address 4	0x0 to 0xFFFF	0x0	-	Changeable at any time
C9-26	0xC91A	32-bit data type selection 5	0 to 1	0	-	Changeable at any time
C9-27	0xC91B	32-bit data amplification coefficient 5	0 to 10000	0	-	Changeable at any time
C9-28	0xC91C	LOWORD of 32-bit data RAM address 5	0x0 to 0xFFFF	0x0	-	Changeable at any time
C9-29	0xC91D	HIWORD of 32-bit data RAM address 5	0x0 to 0xFFFF	0x0	-	Changeable at any time
C9-30	0xC91E	Internal parameter monitoring input 1	0 to 97	0	-	Changeable at any time
C9-31	0xC91F	Internal parameter monitoring input 2	0 to 97	0	-	Changeable at any time
C9-32	0xC920	Internal parameter monitoring input 3	0 to 97	0	-	Changeable at any time
C9-33	0xC921	Internal parameter monitoring input 4	0 to 97	0	-	Changeable at any time

Para.	Comm. Addr.	Name	Reference	De fault	Unit	Change
C9-34	0xC922	Internal parameter monitoring input 5	0 to 97	0	-	Changeable at any time
C9-35	0xC923	Internal parameter monitoring input 6	0 to 97	0	-	Changeable at any time
C9-36	0xC924	Internal parameter monitoring input 7	0 to 97	0	-	Changeable at any time
C9-37	0xC925	Internal parameter monitoring input 8	0 to 97	0	-	Changeable at any time
C9-40	0xC928	Variable connector value viewing input 1	0 to 65535	0	-	Changeable at any time
C9-41	0xC929	Variable connector value viewing input 2	0 to 65535	0	-	Changeable at any time
C9-42	0xC92A	Variable connector value viewing input 3	0 to 65535	0	-	Changeable at any time
C9-43	0xC92B	Variable connector value viewing input 4	0 to 65535	0	-	Changeable at any time
C9-44	0xC92C	Variable connector value viewing input 5	0 to 65535	0	-	Changeable at any time
C9-45	0xC92D	Variable connector value viewing input 6	0 to 65535	0	-	Changeable at any time
C9-46	0xC92E	Variable connector value viewing input 7	0 to 65535	0	-	Changeable at any time
C9-47	0xC92F	Variable connector value viewing input 8	0 to 65535	0	-	Changeable at any time
C9-50	0xC932	Monitoring variable 0	–32768 to +32767	0	-	Unchangeable
C9-51	0xC933	Monitoring variable 1	–32768 to +32767	0	-	Unchangeable
C9-52	0xC934	Monitoring variable 2	–32768 to +32767	0	-	Unchangeable
C9-53	0xC935	Monitoring variable 3	–32768 to +32767	0	-	Unchangeable
C9-54	0xC936	Monitoring variable 4	–32768 to +32767	0	-	Unchangeable
C9-55	0xC937	Monitoring variable 5	–32768 to +32767	0	-	Unchangeable
C9-56	0xC938	Monitoring variable 6	–32768 to +32767	0	-	Unchangeable

Para.	Comm. Addr.	Name	Reference	De fault	Unit	Change
C9-57	0xC939	Monitoring variable 7	–32768 to +32767	0	-	Unchangea ble
C9-58	0xC93A	Monitoring variable 8	–32768 to +32767	0	-	Unchangea ble
C9-59	0xC93B	Monitoring variable 9	–32768 to +32767	0	-	Unchangea ble
C9-70	0xC946	Commissioning variable 0	–32768 to +32767	0	-	Changeable at any time
C9-71	0xC947	Commissioning variable 1	–32768 to +32767	0	-	Changeable at any time
C9-72	0xC948	Commissioning variable 2	–32768 to +32767	0	-	Changeable at any time
C9-73	0xC949	Commissioning variable 3	–32768 to +32767	0	-	Changeable at any time
C9-74	0xC94A	Commissioning variable 4	–32768 to +32767	0	-	Changeable at any time
C9-75	0xC94B	Commissioning variable 5	–32768 to +32767	0	-	Changeable at any time
C9-76	0xC94C	Commissioning variable 6	–32768 to +32767	0	-	Changeable at any time
C9-77	0xC94D	Commissioning variable 7	–32768 to +32767	0	-	Changeable at any time
C9-78	0xC94E	Commissioning variable 8	–32768 to +32767	0	-	Changeable at any time
C9-79	0xC94F	Commissioning variable 9	–32768 to +32767	0	-	Changeable at any time
CA-00	0xCA00	Motor type	0: Common asynchronous motor 1: Variable frequency asynchronous motor 2: Permanent magnet synchronous motor	0	-	Changeable only at stop
CA-01	0xCA01	Rated motor power	0.1 kW to 1000.0 kW	3.7	kW	Changeable only at stop
CA-02	0xCA02	Rated motor voltage	1 V to 2000 V	380	V	Changeable only at stop
CA-03	0xCA03	Rated motor current	0.01 A to 655.35 A	9.00	A	Changeable only at stop
CA-04	0xCA04	Rated motor frequency	0.01 Hz to F0-10	50.00	Hz	Changeable only at stop
CA-05	0xCA05	Rated motor speed	1 RPM to 65535 RPM	1460	RPM	Changeable only at stop
CA-06	0xCA06	Number of parallel motors	1 to 200	1	-	Changeable only at stop

Para.	Comm. Addr.	Name	Reference	De fault	Unit	Change
CA-07	0xCA07	Motor information command word	Bit00: Mutual inductance curve 0: Disabled 1: Enabled Bit01: D- and Q-axis inductance curve 0: Disabled 1: Enabled Bit02: Rotor resistance online auto-tuning 0: Disabled 1: Enabled Bit03: Rotor resistance online auto-tuning method 0: Amplitude 1: Phase Bit04: Motor thermal model 0: Disabled 1: Enabled Bit05: Temperature source of motor thermal model 0: Estimated temperature 1: Temperature detected by sensor Bit06: Torque coefficient calculation of asynchronous motor 0: Torque formula 1: Current distribution Bit07: Torque coefficient calculation of synchronous motor 0: Torque formula 1: Torque matching the rated torque Bit08: Zero speed friction torque calculation 0: Torque linearly decreasing to zero 1: Torque to maintain minimum speed Bit09: Calculation of model parameters based on nameplate parameters 0: Disabled 1: Enabled Bit10: Confirmation of calculating model parameters based on nameplate parameters 0: Default 1: Confirm	0x3	-	Changeable only at stop
CA-08	0xCA08	Number of motor pole pairs	0 to 64	0	-	Changeable only at stop
CA-09	0xCA09	Motor power factor	0.600 to 1.000	0.860	-	Changeable only at stop
CA-10	0xCA0A	Encoder PPR	1 to 65535	1024	-	Changeable only at stop

Para.	Comm. Addr.	Name	Reference	De fault	Unit	Change
CA-11	0xCA0B	Encoder type	0: ABZ incremental encoder 1: 23-bit encoder 2: Resolver 3: External input	0	-	Changeable only at stop
CA-12	0xCA0C	Speed feedback PG card	0: Local PG card 1: Extension PG card	0	-	Changeable only at stop
CA-13	0xCA0D	Number of resolver pole pairs	1 to 65535	1	-	Changeable only at stop
CA-15	0xCA0F	Speed feedback PG wire breakage detection time	0.0s to 10.0s	0.0	s	Changeable only at stop
CA-16	0xCA10	A/B phase sequence of encoder	0: Forward 1: Reverse	0	-	Changeable only at stop
CA-17	0xCA11	Encoder installation angle	0.0° to 359.9°	0.0	°	Changeable only at stop
CA-18	0xCA12	Expansion card	1: Expansion card 1 2: Expansion card 2	1	-	Changeable only at stop
CA-19	0xCA13	ABZ encoder speed measurement mode at low speed	0: Maintain 1: Attenuate 2: Optimized solution	2	-	Changeable only at stop
CA-20	0xCA14	Encoder speed measurement filter time constant	0.000s to 10.000s	0.004	s	Changeable at any time
CA-21	0xCA15	Encoder wire breakage software detection coefficient	0.000 to 8.000	1.000	-	Changeable at any time
CA-22	0xCA16	Encoder control word	Bit00: Speed measurement 0: Disabled 1: Enabled Bit01: Software detection of wire breakage 0: Disabled 1: Enabled Bit02: Glitch removal 0: Disabled 1: Enabled Bit03: ABZ encoder speed measurement mode 0: Quadruplicated frequency 1: Single pulse	0	-	Changeable only at stop
CA-23	0xCA17	Speed measurement exception count threshold	1 to 100	10	-	Changeable only at stop
CA-24	0xCA18	Motor gear ratio (numerator)	1 to 65535	1	-	Changeable only at stop

Para.	Comm. Addr.	Name	Reference	De fault	Unit	Change
CA-25	0xCA19	Motor gear ratio (denominator)	1 to 65535	1	-	Changeable only at stop
CA-26	0xCA1A	External input source of encoder	0: 0 1: AI1 2: AI2 3: AI3 4: Pulse reference 5: Communication 6: Multi-reference 7: Motor-driven potentiometer 8: PID Others: F connector	0	-	Unchangea ble
CA-29	0xCA1D	Auto-tuning	0: No operation 1: Static auto-tuning on partial parameters of asynchronous motor 2: Dynamic auto-tuning on asynchronous motor 3: Static auto-tuning on all parameters of asynchronous motor 4: Inertia auto-tuning 5: Deadzone auto-tuning 11: With-load auto-tuning on synchronous motor (excluding back EMF) 12: No-load dynamic auto-tuning on synchronous motor 13: Static auto-tuning on all parameters of synchronous motor (excluding zero point angle)	0	-	Changeable only at stop
CA-30	0xCA1E	Asynchronous motor stator resistance	0.001 Ω to 65.535 Ω	1.204	Ω	Changeable only at stop
CA-31	0xCA1F	Asynchronous motor rotor resistance	0.001 Ω to 65.535 Ω	0.908	Ω	Changeable only at stop
CA-32	0xCA20	Asynchronous motor leakage inductance	0.01 mH to 655.35 mH	5.28	mH	Changeable only at stop
CA-33	0xCA21	Asynchronous motor mutual inductance	0.1 mH to 6553.5 mH	156.8	mH	Changeable only at stop
CA-34	0xCA22	Asynchronous motor no-load current	0.01 A to CA-03	4.20	A	Changeable only at stop
CA-35	0xCA23	Synchronous motor stator resistance	0.001 Ω to 65.535 Ω	1.204	Ω	Changeable only at stop
CA-36	0xCA24	Synchronous motor D axis inductance	0.01 mH to 655.35 mH	5.28	mH	Changeable only at stop
CA-37	0xCA25	Synchronous motor Q axis inductance	0.01 mH to 655.35 mH	5.28	mH	Changeable only at stop

Para.	Comm. Addr.	Name	Reference	De fault	Unit	Change
CA-39	0xCA27	Synchronous motor back EMF coefficient	0.0 V to 6553.5 V	300.0	V	Changeable only at stop
CA-40	0xCA28	Stator leakage inductance	0.000 mH to 65.535 mH	6.540	mH	Changeable only at stop
CA-41	0xCA29	Electromechanical time constant	1 ms to 65535 ms	100	ms	Unchangea ble
CA-42	0xCA2A	Inertia ratio	0.0% to 6553.5%	120.0	%	Changeable only at stop
CA-43	0xCA2B	Friction torque	0.0% to 6553.5%	2.0	%	Changeable only at stop
CA-44	0xCA2C	Excitation current coefficient 1 of mutual inductance curve (rated)	5.0% to 100.0%	50.0	%	Changeable only at stop
CA-45	0xCA2D	Excitation current coefficient 2 of mutual inductance curve (rated)	5.0% to 100.0%	75.0	%	Changeable only at stop
CA-46	0xCA2E	Excitation current coefficient 3 of mutual inductance curve	100.0% to 800.0%	150.0	%	Changeable only at stop
CA-47	0xCA2F	Excitation current coefficient 4 of mutual inductance curve	100.0% to 800.0%	210.0	%	Changeable only at stop
CA-48	0xCA30	Flux coefficient 1 of mutual inductance curve (rated)	10.0% to 100.0%	50.0	%	Changeable only at stop
CA-49	0xCA31	Flux coefficient 2 of mutual inductance curve (rated)	10.0% to 100.0%	85.0	%	Changeable only at stop
CA-50	0xCA32	Flux coefficient 3 of mutual inductance curve	100.0% to 300.0%	115.0	%	Changeable only at stop
CA-51	0xCA33	Flux coefficient 4 of mutual inductance curve	100.0% to 300.0%	125.0	%	Changeable only at stop
CA-52	0xCA34	Speed point 1 of friction curve	0 RPM to 30000 RPM	15	RPM	Changeable only at stop
CA-53	0xCA35	Speed point 2 of friction curve	0 RPM to 30000 RPM	30	RPM	Changeable only at stop
CA-54	0xCA36	Speed point 3 of friction curve	0 RPM to 30000 RPM	60	RPM	Changeable only at stop

Para.	Comm. Addr.	Name	Reference	De fault	Unit	Change
CA-55	0xCA37	Speed point 4 of friction curve	0 RPM to 30000 RPM	120	RPM	Changeable only at stop
CA-56	0xCA38	Speed point 5 of friction curve	0 RPM to 30000 RPM	150	RPM	Changeable only at stop
CA-57	0xCA39	Speed point 6 of friction curve	0 RPM to 30000 RPM	300	RPM	Changeable only at stop
CA-58	0xCA3A	Speed point 7 of friction curve	0 RPM to 30000 RPM	600	RPM	Changeable only at stop
CA-59	0xCA3B	Speed point 8 of friction curve	0 RPM to 30000 RPM	1200	RPM	Changeable only at stop
CA-60	0xCA3C	Speed point 9 of friction curve	0 RPM to 30000 RPM	1500	RPM	Changeable only at stop
CA-61	0xCA3D	Speed point 10 of friction curve	0 RPM to 30000 RPM	3000	RPM	Changeable only at stop
CA-62	0xCA3E	Torque point 1 of friction curve	–320 N·m to +320 N·m	0.00	N·m	Changeable only at stop
CA-63	0xCA3F	Torque point 2 of friction curve	–320 N·m to +320 N·m	0.00	N·m	Changeable only at stop
CA-64	0xCA40	Torque point 3 of friction curve	–320 N·m to +320 N·m	0.00	N·m	Changeable only at stop
CA-65	0xCA41	Torque point 4 of friction curve	–320 N·m to +320 N·m	0.00	N·m	Changeable only at stop
CA-66	0xCA42	Torque point 5 of friction curve	–320 N·m to +320 N·m	0.00	N·m	Changeable only at stop
CA-67	0xCA43	Torque point 6 of friction curve	–320 N·m to +320 N·m	0.00	N·m	Changeable only at stop
CA-68	0xCA44	Torque point 7 of friction curve	–320 N·m to +320 N·m	0.00	N·m	Changeable only at stop
CA-69	0xCA45	Torque point 8 of friction curve	–320 N·m to +320 N·m	0.00	N·m	Changeable only at stop
CA-70	0xCA46	Torque point 9 of friction curve	–320 N·m to +320 N·m	0.00	N·m	Changeable only at stop
CA-71	0xCA47	Torque point 10 of friction curve	–320 N·m to +320 N·m	0.00	N·m	Changeable only at stop
CA-72	0xCA48	Current coefficient starting point of D- and Q-axis inductance curve	–800% to +800.0%	–200	%	Changeable only at stop
CA-73	0xCA49	Current coefficient end point of D- and Q-axis inductance curve	–800% to +800.0%	200.0	%	Changeable only at stop
CA-74	0xCA4A	D axis inductance 1 of D- and Q-axis inductance curve	0.0% to 6553.5%	100.0	%	Changeable only at stop

Para.	Comm. Addr.	Name	Reference	De fault	Unit	Change
CA-75	0xCA4B	D axis inductance 2 of D- and Q-axis inductance curve	0.0% to 6553.5%	100.0	%	Changeable only at stop
CA-76	0xCA4C	D axis inductance 3 of D- and Q-axis inductance curve	0.0% to 6553.5%	100.0	%	Changeable only at stop
CA-77	0xCA4D	D axis inductance 4 of D- and Q-axis inductance curve	0.0% to 6553.5%	100.0	%	Changeable only at stop
CA-78	0xCA4E	D axis inductance 5 of D- and Q-axis inductance curve	0.0% to 6553.5%	100.0	%	Changeable only at stop
CA-79	0xCA4F	D axis inductance 6 of D- and Q-axis inductance curve	0.0% to 6553.5%	100.0	%	Changeable only at stop
CA-80	0xCA50	D axis inductance 7 of D- and Q-axis inductance curve	0.0% to 6553.5%	100.0	%	Changeable only at stop
CA-81	0xCA51	D axis inductance 8 of D- and Q-axis inductance curve	0.0% to 6553.5%	100.0	%	Changeable only at stop
CA-82	0xCA52	D axis inductance 9 of D- and Q-axis inductance curve	0.0% to 6553.5%	100.0	%	Changeable only at stop
CA-83	0xCA53	D axis inductance 10 of D- and Q-axis inductance curve	0.0% to 6553.5%	100.0	%	Changeable only at stop
CA-84	0xCA54	D axis inductance 11 of D- and Q-axis inductance curve	0.0% to 6553.5%	100.0	%	Changeable only at stop
CA-85	0xCA55	D axis inductance 12 of D- and Q-axis inductance curve	0.0% to 6553.5%	100.0	%	Changeable only at stop
CA-86	0xCA56	Q axis inductance 1 of D- and Q-axis inductance curve	0.0% to 6553.5%	100.0	%	Changeable only at stop
CA-87	0xCA57	Q axis inductance 2 of D- and Q-axis inductance curve	0.0% to 6553.5%	100.0	%	Changeable only at stop
CA-88	0xCA58	Q axis inductance 3 of D- and Q-axis inductance curve	0.0% to 6553.5%	100.0	%	Changeable only at stop
CA-89	0xCA59	Q axis inductance 4 of D- and Q-axis inductance curve	0.0% to 6553.5%	100.0	%	Changeable only at stop

Para.	Comm. Addr.	Name	Reference	De fault	Unit	Change
CA-90	0xCA5A	Q axis inductance 5 of D- and Q-axis inductance curve	0.0% to 6553.5%	100.0	%	Changeable only at stop
CA-91	0xCA5B	Q axis inductance 6 of D- and Q-axis inductance curve	0.0% to 6553.5%	100.0	%	Changeable only at stop
CA-92	0xCA5C	Q axis inductance 7 of D- and Q-axis inductance curve	0.0% to 6553.5%	100.0	%	Changeable only at stop
CA-93	0xCA5D	Q axis inductance 8 of D- and Q-axis inductance curve	0.0% to 6553.5%	100.0	%	Changeable only at stop
CA-94	0xCA5E	Q axis inductance 9 of D- and Q-axis inductance curve	0.0% to 6553.5%	100.0	%	Changeable only at stop
CA-95	0xCA5F	Q axis inductance 10 of D- and Q-axis inductance curve	0.0% to 6553.5%	100.0	%	Changeable only at stop
CA-96	0xCA60	Q axis inductance 11 of D- and Q-axis inductance curve	0.0% to 6553.5%	100.0	%	Changeable only at stop
CA-97	0xCA61	Q axis inductance 12 of D- and Q-axis inductance curve	0.0% to 6553.5%	100.0	%	Changeable only at stop
CB-00	0xCB00	V/f curve	0: Straight-line V/f curve 1: Multi-point V/f curve 2: Reserved 3: Reserved 4: Reserved 5: Reserved 6: Reserved 7: Reserved 8: Reserved 9: Reserved 10: V/f complete separation mode 11: V/f half separation mode	0	-	Changeable only at stop
CB-01	0xCB01	Torque boost	0.0% to 30.0%	3.0	%	Changeable at any time
CB-02	0xCB02	Cut-off frequency of torque boost	0.00 Hz to F0-10	50.00	Hz	Changeable only at stop
CB-03	0xCB03	Multi-point V/f frequency 1	0.00 Hz to CB-05	0.00	Hz	Changeable only at stop
CB-04	0xCB04	Multi-point V/f voltage 1	0.0% to +100.0%	0.0	%	Changeable only at stop
CB-05	0xCB05	Multi-point V/f frequency 2	CB-03 to CB-07	0.00	Hz	Changeable only at stop

Para.	Comm. Addr.	Name	Reference	De fault	Unit	Change
CB-06	0xCB06	Multi-point V/f voltage 2	0.0% to +100.0%	0.0	%	Changeable only at stop
CB-07	0xCB07	Multi-point V/f frequency 3	CB-05 to CA-04	0.00	Hz	Changeable only at stop
CB-08	0xCB08	Multi-point V/f voltage 3	0.0% to +100.0%	0.0	%	Changeable only at stop
CB-09	0xCB09	V/f slip compensation gain	0.0 to 200.0	0.0	-	Changeable at any time
CB-10	0xCB0A	V/f overexcitation gain	0 to 200	64	-	Changeable at any time
CB-11	0xCB0B	V/f oscillation suppression gain	0 to 100	40	-	Changeable at any time
CB-12	0xCB0C	V/f oscillation suppression	0: Disabled 1: Enabled	1	-	Changeable at any time
CB-13	0xCB0D	Voltage source for V/f separation	0: Digital setting (CB-14) 1: AI1 2: AI2 3: AI3 4: Pulse reference (DI5) 5: Multi-reference 6: Simple PLC 7: PID 8: Communication Others: F connector	0	-	Changeable at any time
CB-14	0xCB0E	V/f separation voltage	0 V to CA-02	0	V	Changeable at any time
CB-15	0xCB0F	Voltage rise time of V/f separation	0.0s to 1000.0s	0.0	s	Changeable at any time
CB-16	0xCB10	Voltage fall time of V/f separation	0.0s to 1000.0s	0.0	s	Changeable at any time
CB-17	0xCB11	Stop mode for V/f separation	0: Frequency and voltage decline to 0 independently 1: Frequency declines to 0 after voltage declines to 0 2: Coast to stop (new)	0	-	Changeable at any time
CB-18	0xCB12	Overcurrent stall suppression action current	50% to 200%	150	%	Changeable only at stop
CB-19	0xCB13	Overcurrent stall suppression	0: Disabled 1: Enabled	1	-	Changeable only at stop
CB-20	0xCB14	Overcurrent stall suppression gain	1 to 100	20	-	Changeable at any time

Para.	Comm. Addr.	Name	Reference	De fault	Unit	Change
CB-21	0xCB15	Compensation coefficient of speed multiplying overcurrent stall suppression action current	50% to 200%	100	%	Changeable only at stop
CB-22	0xCB16	Overvoltage stall suppression action voltage	330.0 V to 800.0 V	770.0	V	Changeable at any time
CB-23	0xCB17	Overvoltage stall suppression	0: Disabled 1: Enabled	1	-	Changeable only at stop
CB-24	0xCB18	Overvoltage stall suppression frequency gain	1 to 100	30	-	Changeable at any time
CB-25	0xCB19	Overvoltage stall suppression voltage gain	1 to 100	30	-	Changeable at any time
CB-26	0xCB1A	Frequency rise threshold for overvoltage stall suppression	0 Hz to 50 Hz	5	Hz	Changeable only at stop
CB-27	0xCB1B	Slip compensation filter time	0.1s to 10.0s	0.5	s	Changeable only at stop
CB-28	0xCB1C	Multi-point curve source	0: 3-point curve 1: Multi-point curve module A 2: Multi-point curve module B	0	-	Changeable only at stop
CB-33	0xCB21	Online torque compensation gain	80 to 150	100	-	Changeable only at stop
CB-34	0xCB22	ImaxKi coefficient	10% to 1000%	100	%	Changeable only at stop
CB-35	0xCB23	Overcurrent suppression threshold (relative to rated motor current)	80% to 300%	200	%	Changeable only at stop
CB-36	0xCB24	Frequency threshold for overcurrent suppression field weakening	100% to 500%	100	%	Changeable only at stop
CB-37	0xCB25	IT filter time	10 ms to 1000 ms	100	ms	Changeable only at stop
CB-38	0xCB26	Slip compensation mode	0: Disabled 1: Slip compensation without PG 2: Slip compensation with PG	1	-	Changeable only at stop

Para.	Comm. Addr.	Name	Reference	De fault	Unit	Change
CB-39	0xCB27	VdcMaxCtrl allowed runtime	0.0s to 100.0s	0.0	s	Changeable only at stop
CB-40	0xCB28	Upper limit of V/f separation voltage	50.0% to 200.0%	100.0	%	Changeable only at stop
CB-41	0xCB29	RFG time of V/f separation frequency	0: RFG time forced to 0 1: Preset RFG time	0	-	Changeable only at stop
CB-42	0xCB2A	Cut-off frequency of V/f oscillation suppression filter	1.0 Hz to 50.0 Hz	8.0	Hz	Changeable at any time
CB-43	0xCB2B	Cut-off frequency threshold for V/f oscillation suppression	10 Hz to 3000 Hz	200	Hz	Changeable at any time
CB-44	0xCB2C	VdcMaxCtrl feedforward coefficient	0% to 500%	0	%	Changeable at any time
CB-50	0xCB32	PMVVC low-speed IF	0: Disabled 1: Enabled	1	-	Changeable only at stop
CB-51	0xCB33	PMVVC low-speed IF current	30 to 250	100	-	Changeable only at stop
CB-52	0xCB34	PMVVC low-speed IF speed switching threshold	2.0% to 100.0%	10.0	%	Changeable only at stop
CB-53	0xCB35	PMVVC oscillation suppression gain coefficient	0 to 500	100	-	Changeable at any time
CB-54	0xCB36	PMVVC filter time coefficient	0 to 500	100	-	Changeable at any time
CB-55	0xCB37	PMVVC energy conservation control mode	0: Fixed straight-line V/f curve 1: Fixed 30% reactive current 2: MTPA control	2	-	Changeable only at stop
CC-00	0xCC00	Startup mode	0: Direct start 1: Flying start 2: Pre-excitation start (AC asynchronous motor) 3: SVC quick start	0	-	Changeable at any time
CC-01	0xCC01	Speed tracking mode	0: From the stop frequency 1: From the power frequency 2: From the maximum frequency 3: Reserved 4: Magnetic field directional speed tracking (MD290)	0	-	Changeable at any time
CC-02	0xCC02	Speed of speed tracking	1 to 100	20	-	Changeable at any time
CC-03	0xCC03	Startup frequency	0.00 Hz to 10.00 Hz	0.00	Hz	Changeable at any time

Para.	Comm. Addr.	Name	Reference	De fault	Unit	Change
CC-04	0xCC04	Startup frequency hold time	0.0s to 100.0s	0.0	s	Changeable only at stop
CC-05	0xCC05	DC braking current at startup	0% to 100%	50	%	Changeable only at stop
CC-06	0xCC06	DC braking time at startup	0.0s to 100.0s	0.0	s	Changeable only at stop
CC-07	0xCC07	Stop mode	0: Decelerate to stop 1: Coast to stop 2: Stop at maximum capability	0	-	Changeable at any time
CC-08	0xCC08	Start frequency of DC braking at stop	0.00 Hz to F0-10	0.00	Hz	Changeable at any time
CC-09	0xCC09	DC braking delay at stop	0.0s to 100.0s	0.0	s	Changeable at any time
CC-10	0xCC0A	DC braking current at stop	0% to 100%	50	%	Changeable at any time
CC-11	0xCC0B	DC braking time at stop	0.0s to 100.0s	0.0	s	Changeable at any time
CC-12	0xCC0C	Speed tracking sweep current limit closed loop Kp	0 to 1000	500	-	Changeable at any time
CC-13	0xCC0D	Speed tracking sweep current limit closed loop Ki	0 to 1000	800	-	Changeable at any time
CC-14	0xCC0E	Speed tracking current	30% to 200%	80	%	Changeable only at stop
CC-15	0xCC0F	Current loop multiple	10% to 600%	100	%	Changeable at any time
CC-16	0xCC10	Demagnetization time (valid for asynchronous motors)	0.00s to 5.00s	0.50	s	Changeable at any time
CC-17	0xCC11	Overexcitation enable	0: Disabled 2: Enabled during deceleration 3: Enabled always	0	-	Changeable at any time
CC-18	0xCC12	Overexcitation suppression current	0% to 150%	100	%	Changeable at any time
CC-19	0xCC13	Overexcitation gain	0.01 to 2.50	1.25	-	Changeable at any time

Para.	Comm. Addr.	Name	Reference	Default	Unit	Change
CC-20	0xCC14	Parameter auto-tuning upon startup	Bit00: Synchronous motor pole position auto-tuning upon startup 0: Disabled 1: Enabled Bit01: Quick stator resistance auto-tuning upon startup 0: Disabled 1: Enabled Bit02–Bit03: HFI pole position auto-tuning 0: Disabled 1: Enabled 2: Adaptive Bit04: IGBT shoot-through self-check upon startup 0: Disabled 1: Enabled Bit05: Short-to-ground self-check upon startup (reserved) 0: Disabled 1: Enabled Bit06: Phase loss self-check upon startup (reserved) 0: Disabled 1: Enabled	1	-	Changeable only at stop
CC-21	0xCC15	Auto-tuning direction	0 to 1	1	-	Changeable only at stop
CC-22	0xCC16	Oscillation suppression gain of synchronous motor back EMF auto-tuning	0.0 to 30.0	3.2	-	Changeable only at stop
CC-23	0xCC17	Target speed of rotation auto-tuning	30.0% to 100.0%	70.0	%	Changeable only at stop
CC-24	0xCC18	Target speed 1 of inertia auto-tuning	10.0% to CC-25	40.0	%	Changeable only at stop
CC-25	0xCC19	Target speed 2 of inertia auto-tuning	CC-24 to 100.0%	60.0	%	Changeable only at stop
CC-26	0xCC1A	Overcurrent prevention of mutual inductance saturation curve	0 to 1	1	-	Changeable only at stop

Para.	Comm. Addr.	Name	Reference	De fault	Unit	Change
CC-27	0xCC1B	Auto-tuning items	Bit00: Speed loop parameter adaptation 0: Disabled 1: Enabled Bit01: Current loop parameter adaptation 0: Disabled 1: Enabled Bit02: Drive nonlinear auto-tuning 0: Disabled 1: Enabled Bit03: Inter-phase deviation coefficient auto-tuning 0: Disabled 1: Enabled Bit04: Auto-tuning of initial pole position of synchronous motor 0: Disabled 1: Enabled Bit05: Auto-tuning of D- and Q-axis inductance model of synchronous motor 0: Disabled 1: Enabled Bit06: System inertia auto-tuning 0: Disabled 1: Enabled Bit07: HFI pole position auto-tuning 0: Disabled 1: Enabled	117	-	Changeable only at stop
CC-28	0xCC1C	OFF3 stop mode	0: Quick stop 1: Stop at maximum capability	0	-	Changeable only at stop
CC-29	0xCC1D	Stop mode during running	0: OFF1 stop mode 1: OFF2 stop mode 2: OFF3 stop mode	1	-	Changeable only at stop
CC-30	0xCC1E	Stop mode for torque control	0: Coast to stop forcibly 1: Switch to speed control mode and then stop 2: Maintain torque control mode until zero speed and then block	1	-	Changeable only at stop
CC-32	0xCC20	Proportional gain adjustment coefficient	0.1 to 2.0	1.0	-	Changeable at any time
CC-33	0xCC21	Integral gain adjustment coefficient	0.1 to 2.0	1.0	-	Changeable at any time
CC-34	0xCC22	Zero-speed threshold	0.1% to 200.0%	2.0	%	Changeable at any time
CC-35	0xCC23	Zero-speed stop delay	0.00s to 10.00s	0.10	s	Changeable only at stop

Para.	Comm. Addr.	Name	Reference	De fault	Unit	Change
CC-36	0xCC24	Reference source execution interval	0 to 20	4	-	Changeable only at stop
CC-37	0xCC25	Trial current for speed tracking of synchronous motor	5.0% to 50.0%	10.0	%	Changeable only at stop
CC-38	0xCC26	Minimum frequency for speed tracking of synchronous motor	0.0 Hz to 100.0 Hz	0.0	Hz	Changeable only at stop
CC-39	0xCC27	Angle compensation for speed tracking of synchronous motor	0 to 360	0	-	Changeable only at stop
CC-40	0xCC28	Parameter auto-tuning of synchronous motor upon startup	0 to 1	0	-	Changeable at any time
CC-41	0xCC29	Current motor angle	0 to 65535	0	-	Unchangea ble
CC-42	0xCC2A	Forward torque limit 1	0.0 to 400.0	150.0	-	Changeable at any time
CC-43	0xCC2B	Reverse torque limit 1	0.0 to 400.0	150.0	-	Changeable at any time
CC-44	0xCC2C	Source of forward torque limit 2	0: 400% Others: F connector	0	-	Changeable at any time
CC-45	0xCC2D	Source of reverse torque limit 2	0: –400% Others: F connector	0	-	Changeable at any time
CC-46	0xCC2E	Ramp (FRG) selection bit0	0: 0 1: 1 2: Terminal function input 3: DI1 4: DI2 5: DI3 6: DI4 7: DI5 8: DI6 9: DI7 10: DI8 11: DI9 12: DI10 13: DI11 14: DI12 15: DI13 16: DI14 17: DI15 18: DI16 Others: B connector	0	-	Changeable at any time

Para.	Comm. Addr.	Name	Reference	De fault	Unit	Change
CC-47	0xCC2F	Ramp (FRG) selection bit1	Same as CC-46	0	-	Changeable at any time
CC-50	0xCC32	Motor overload protection	0: Disabled 1: Enabled	1	-	Changeable at any time
CC-51	0xCC33	Motor overload protection gain	0.20 to 10.00	1.00	-	Changeable at any time
CC-52	0xCC34	Motor overload pre-warning coefficient	50% to 100%	80	%	Changeable at any time
CC-53	0xCC35	Overvoltage stall suppression gain	1 to 100	30	-	Changeable at any time
CC-54	0xCC36	Overvoltage stall protection voltage	330.0 V to 800.0 V	770.0	V	Changeable at any time
CC-55	0xCC37	Input phase loss/ Contactor pickup protection	Ones: Input phase loss protection 0: Disabled 1: Protection enabled when both software and hardware input phase loss conditions are met 2: Protection enabled when software input phase loss conditions are met 3: Protection enabled when hardware input phase loss conditions are met Tens: Contactor pickup protection 0: Disabled 1: Enabled	11	-	Changeable at any time
CC-56	0xCC38	Output phase loss protection	Ones: Output phase loss protection upon power-on 0: Disabled 1: Enabled Tens: Output phase loss protection before running 0: Disabled 1: Enabled	1	-	Changeable at any time
CC-57	0xCC39	Power dip ride-through	0: Disabled 1: Decelerate 2: Decelerate to stop 3: Suppress voltage dip	0	-	Changeable only at stop
CC-58	0xCC3A	Voltage threshold for disabling power dip ride-through	80% to 100%	85	%	Changeable only at stop
CC-59	0xCC3B	Delay of voltage recovery from power dip	0.0s to 100.0s	0.5	s	Changeable only at stop
CC-60	0xCC3C	Voltage threshold for enabling power dip ride-through	60% to 100%	80	%	Changeable only at stop
CC-61	0xCC3D	Protection upon load loss	0: Disabled 1: Enabled	0	-	Changeable at any time

Para.	Comm. Addr.	Name	Reference	De fault	Unit	Change
CC-62	0xCC3E	Load loss detection level	0.0% to +100.0%	10.0	%	Changeable at any time
CC-63	0xCC3F	Load loss detection time	0.0s to 60.0s	1.0	s	Changeable at any time
CC-64	0xCC40	Overspeed detection level	0.0% to 50.0%	20.0	%	Changeable at any time
CC-65	0xCC41	Overspeed detection time	0.0s to 60.0s	1.0	s	Changeable at any time
CC-66	0xCC42	Detection level of excessive speed deviation	0.0% to 50.0%	20.0	%	Changeable at any time
CC-67	0xCC43	Detection time of excessive speed deviation	0.0s to 60.0s	5.0	s	Changeable at any time
CC-68	0xCC44	Power dip ride-through gain Kp	1 to 100	40	-	Changeable at any time
CC-69	0xCC45	Power dip ride-through integral coefficient Ki	1 to 100	30	-	Changeable at any time
CC-70	0xCC46	Deceleration time of power dip ride-through	0.0s to 300.0s	20.0	s	Changeable at any time
CC-71	0xCC47	Voltage dip suppression time	0.1s to 600.0s	0.5	s	Changeable at any time
CC-72	0xCC48	Motor protection	Bit00: Motor overload determination (reserved) Bit01: Motor overheat detection (reserved) Bit02: PG fault detection (reserved) Bit03: Current control error detection Bit04: Motor stall error detection Bit05: Locked-rotor detection Bit06: Synchronous motor demagnetization protection Bit07: Protection against locked-rotor in SVC speed open-loop control Bit08: Reserved Bit09: Parameter setting error	537	-	Changeable at any time
CC-73	0xCC49	Locked-rotor time	0.0s to 65.0s	2.0	s	Changeable at any time
CC-74	0xCC4A	Locked-rotor frequency	0.0% to 600.0%	6.0	%	Changeable at any time
CC-75	0xCC4B	Motor stall detection time	0.0s to 10.0s	0.5	s	Changeable at any time
CC-76	0xCC4C	Stall detection threshold	0.0% to +100.0%	30.0	%	Changeable at any time

Para.	Comm. Addr.	Name	Reference	De fault	Unit	Change
CC-77	0xCC4D	Current control exception detection time	0.00s to 1.00s	0.05	s	Changeable at any time
CC-78	0xCC4E	Current control exception detection threshold	0.0% to 200.0%	25.0	%	Changeable at any time
CC-79	0xCC4F	Synchronous motor overcurrent threshold	0.0% to 500.0%	300.0	%	Changeable at any time
CC-81	0xCC51	Speed deviation detection	0 to 1	1	-	Changeable at any time
CC-82	0xCC52	Skip frequency 1	0.00 Hz to F0-10	0.00	Hz	Changeable at any time
CC-83	0xCC53	Skip frequency 2	0.00 Hz to F0-10	0.00	Hz	Changeable at any time
CC-84	0xCC54	Skip frequency 3	0.00 Hz to F0-10	0.00	Hz	Changeable at any time
CC-85	0xCC55	Skip frequency 4	0.00 Hz to F0-10	0.00	Hz	Changeable at any time
CC-86	0xCC56	Skip frequency band	0.00 Hz to F0-10	0.00	Hz	Changeable at any time
CC-87	0xCC57	Source of frequency upper limit	0: F0-12 1: AI1 2: AI2 3: AI3 4: Pulse reference 5: Communication Others: F connector	0	-	Changeable only at stop
CC-88	0xCC58	Frequency upper limit	CC-90 to F0-10	50.00	Hz	Changeable at any time
CC-89	0xCC59	Frequency upper limit offset	0.00 Hz to F0-10 (maximum frequency)	0.00	Hz	Changeable at any time
CC-90	0xCC5A	Frequency lower limit	0.00 Hz to CC-88	0.00	Hz	Changeable at any time
CC-91	0xCC5B	Speed/Torque control mode	0: Speed control 1: Torque control	0	-	Changeable at any time
CD-00	0xCD00	Asynchronous motor FVC model switchover frequency	0% to 1000%	20	%	Changeable only at stop
CD-01	0xCD01	Asynchronous motor FVC model switchover hysteresis frequency	10% to 50%	20	%	Changeable only at stop

Para.	Comm. Addr.	Name	Reference	De fault	Unit	Change
CD-02	0xCD02	Asynchronous motor FVC observer filter time	5 ms to 100 ms	15	ms	Changeable only at stop
CD-03	0xCD03	Asynchronous motor FVC current model mode	0 to 1	0	-	Changeable only at stop
CD-04	0xCD04	Asynchronous motor FVC pre-excitation output observation angle mode	0 to 1	0	-	Changeable only at stop
CD-05	0xCD05	Asynchronous motor SVC model switchover frequency	10% to 20%	15	%	Changeable only at stop
CD-06	0xCD06	Asynchronous motor SVC observer filter time	5 ms to 50 ms	10	ms	Changeable at any time
CD-07	0xCD07	Asynchronous motor SVC observer gain 1	10% to 500%	100	%	Changeable at any time
CD-08	0xCD08	Asynchronous motor SVC observer gain 2	10% to 100%	20	%	Changeable at any time
CD-09	0xCD09	Asynchronous motor SVC observer mode	0 to 3	0	-	Changeable only at stop
CD-10	0xCD0A	Asynchronous motor SVC pre-excitation mode	0 to 1	0	-	Changeable only at stop
CD-11	0xCD0B	Asynchronous motor SVC speed tracking mode	0 to 1	0	-	Changeable only at stop
CD-14	0xCD0E	Synchronous motor 1 model control	Bit00: Low speed processing Bit01: Low speed processing 1 Bit02: Online auto-tuning of resistance Bit03: Online auto-tuning of back EMF Bit04: KS	5	-	Changeable at any time
CD-15	0xCD0F	Synchronous motor model K1	10 to 3000	200	-	Changeable at any time
CD-16	0xCD10	Synchronous motor model K1Max	100 to 6000	3000	-	Changeable at any time
CD-17	0xCD11	Synchronous motor model KsMin	0.0 to 4.0	0.3	-	Changeable at any time
CD-18	0xCD12	Synchronous motor model Kspeed	50 to 2000	400	-	Changeable at any time

Para.	Comm. Addr.	Name	Reference	De fault	Unit	Change
CD-19	0xCD13	Synchronous motor frequency filter time constant	2 ms to 100 ms	10	ms	Changeable at any time
CD-20	0xCD14	Frequency upper limit of synchronous motor Rs online auto-tuning	1.0% to 20.0%	3.5	%	Changeable at any time
CD-21	0xCD15	Synchronous motor model Kr	0 to 50	10	-	Changeable at any time
CD-22	0xCD16	Synchronous motor model Kr1	0 to 50	5	-	Changeable at any time
CD-23	0xCD17	Synchronous motor low-speed D axis injection current	0% to 100%	20	%	Changeable at any time
CD-24	0xCD18	Synchronous motor model LowFreqTime1	0 to 500	50	-	Changeable at any time
CD-27	0xCD1B	Frequency lower limit of back EMF online auto-tuning	10% to 100%	25	%	Changeable at any time
CD-28	0xCD1C	Synchronous motor model LowFreq	0.0% to 2.0%	0.3	%	Changeable at any time
CD-29	0xCD1D	Synchronous motor model LowFreqTime	0 to 100	10	-	Changeable at any time
CD-30	0xCD1E	Percentage of pole auto-tuning current	50% to 200%	100	%	Changeable at any time
CD-31	0xCD1F	Percentage of high frequency response current	0% to 100%	25	%	Changeable at any time
CD-32	0xCD20	Percentage of HFI and SVC switching frequency	0% to 30%	10	%	Changeable at any time
CD-33	0xCD21	Observer parameter	10 to 200	100	-	Changeable at any time
CD-34	0xCD22	Speed filter cut-off frequency	1 Hz to 200 Hz	10	Hz	Changeable at any time
CD-35	0xCD23	Carrier frequency during NS auto-tuning	2.00 Hz to 16.00 Hz	8.00	Hz	Changeable at any time
CD-36	0xCD24	Automatic calculation of NS auto-tuning voltage	0: Disabled 1: Enabled	1	-	Changeable at any time

Para.	Comm. Addr.	Name	Reference	De fault	Unit	Change
CD-37	0xCD25	Percentage of NS auto-tuning voltage set manually	0% to 100%	10	%	Changeable at any time
CD-38	0xCD26	Duration of HFI stage 1	50 ms to 500 ms	150	ms	Changeable at any time
CD-40	0xCD28	Speed loop proportional gain 1	1 to 100	30	-	Changeable at any time
CD-41	0xCD29	Speed loop integral time 1	0.01s to 10.00s	0.50	s	Changeable at any time
CD-42	0xCD2A	Switchover frequency 1	0.00 Hz to CD-45	5.00	Hz	Changeable at any time
CD-43	0xCD2B	Speed loop proportional gain 2	1 to 100	20	-	Changeable at any time
CD-44	0xCD2C	Speed loop integral time 2	0.01s to 10.00s	1.00	s	Changeable at any time
CD-45	0xCD2D	Switchover frequency 2	CD-42 to F0-10	10.00	Hz	Changeable at any time
CD-46	0xCD2E	Vector control slip gain	50% to 200%	100	%	Changeable at any time
CD-47	0xCD2F	Speed feedback filter time in SVC mode	0.000s to 0.100s	0.015	s	Changeable at any time
CD-49	0xCD31	Torque upper limit source in speed control mode (motoring)	0: Digital setting (F2-10) 1: AI1 2: AI2 3: AI3 4: Pulse reference 5: Communication 6: MIN (AI1, AI2) 7: MAX (AI1, AI2) Others: F connector	0	-	Changeable at any time
CD-50	0xCD32	Torque upper limit in speed control mode	0.0% to 200.0%	150.0	%	Changeable at any time
CD-51	0xCD33	Torque upper limit source in speed control mode (generating)	0: Digital setting (F2-10) 1: AI1 2: AI2 3: AI3 4: Pulse reference (DI5) 5: Communication 6: MIN (AI1, AI2) 7: MAX (AI1, AI2) 8: Digital setting (F2-12) Others: F connector	0	-	Changeable at any time

Para.	Comm. Addr.	Name	Reference	De fault	Unit	Change
CD-52	0xCD34	Torque upper limit in speed control mode (generating)	0.0% to 200.0%	150.0	%	Changeable at any time
CD-53	0xCD35	Field weakening mode	0: No field weakening 1: Auto adjustment 2: Calculation+Auto adjustment	1	-	Changeable only at stop
CD-54	0xCD36	Field weakening gain	1 to 50	5	-	Changeable at any time
CD-57	0xCD39	Generating power limiting	0: Disabled 1: Enabled in the whole process 2: Enabled at constant speed 3: Enabled during deceleration	0	-	Changeable at any time
CD-58	0xCD3A	Generating power upper limit	0.0% to 200.0%	20.0	%	Changeable at any time
CD-59	0xCD3B	Motor 4 control mode	0: SVC 1: FVC 2: V/f	2	-	Changeable only at stop
CD-60	0xCD3C	Initial position angle detection current of synchronous motor	50 to 180	80	-	Changeable only at stop
CD-61	0xCD3D	Initial position angle detection of synchronous motor	0: Detected upon running 1: Not detected 2: Detected upon initial running after power-on	0	-	Changeable at any time
CD-63	0xCD3F	Salient pole rate adjustment gain of synchronous motor	0.20 to 3.00	1.00	-	Changeable at any time
CD-64	0xCD40	Maximum torque-to-current ratio control of synchronous motor	0: Disabled 1: Enabled	1	-	Changeable at any time
CD-65	0xCD41	Z signal correction	0: Disabled 1: Enabled	1	-	Changeable at any time
CD-67	0xCD43	Low speed carrier frequency	0.8 kHz to F0-15	2.0	kHz	Changeable at any time
CD-68	0xCD44	Position lock	0 to 1	0	-	Changeable at any time
CD-69	0xCD45	Switchover frequency	0.00 Hz to CD-42	0.30	Hz	Changeable at any time
CD-70	0xCD46	Position lock speed loop proportional gain	1 to 100	10	-	Changeable at any time
CD-71	0xCD47	Position lock speed loop integral time	0.01s to 10.00s	0.50	s	Changeable at any time

Para.	Comm. Addr.	Name	Reference	De fault	Unit	Change
CD-74	0xCD4A	Auto-tuning free mode	0: Disabled 1: Auto-tuning upon initial running after power-on 2: Auto-tuning upon running	0	-	Changeable at any time
CD-76	0xCD4C	Initial position compensation angle	0.0 to 359.9	0.0	-	Changeable at any time
CD-80	0xCD50	Speed loop command word	Bit00: Speed loop 0: Disabled 1: Enabled Bit01: Integration mode 0: Conventional integration 1: Position integration Bit02: Acceleration torque 0: Disabled 1: Enabled Bit03–Bit04: Acceleration source 0: Function transfer torque 1: Automatic calculation 2: Function transfer acceleration Bit05: Anti-load disturbance 0: Disabled 1: Enabled	11	-	Changeable at any time
CD-81	0xCD51	Locked-rotor fast integral cancel coefficient	0.0% to +100.0%	0.0	%	Changeable at any time
CD-82	0xCD52	Integral torque	–100% to +100.0%	0.0	%	Changeable at any time
CD-83	0xCD53	Speed controller frequency window size	0.00 Hz to 10.00 Hz	0.00	Hz	Changeable only at stop
CD-84	0xCD54	Current filter time for torque reference	0.0 ms to 100.0 ms	0.0	ms	Changeable only at stop
CD-85	0xCD55	Acceleration torque	0: Inactive 1: AI1 2: AI2 3: AI3 4: Pulse reference 5: Communication 6: Multi-reference 7: Motor-driven potentiometer 8: PID Others: F connector	0	-	Changeable at any time
CD-87	0xCD57	Reference model bandwidth	0.00 Hz to 300.00 Hz	0.00	Hz	Changeable at any time
CD-88	0xCD58	Torque feedforward coefficient	0.0% to 1000.0%	100.0	%	Changeable at any time

Para.	Comm. Addr.	Name	Reference	De fault	Unit	Change
CD-89	0xCD59	Vector control reference frequency filter time	0.0 ms to 100.0 ms	0.0	ms	Changeable only at stop
CD-90	0xCD5A	Vector control feedback frequency filter time	0.0 ms to 100.0 ms	0.0	ms	Changeable only at stop
CD-91	0xCD5B	Load observation bandwidth	0.00 Hz to 300.00 Hz	0.00	Hz	Changeable at any time
CD-92	0xCD5C	Load observation coefficient	0.0% to 1000.0%	100.0	%	Changeable at any time
CD-93	0xCD5D	Pseudo integral coefficient	0.000 to 10.000	1.000	-	Changeable at any time
CD-94	0xCD5E	Torque coefficient enable	0: Disabled 1: Enabled	0	-	Changeable at any time
CD-96	0xCD60	Center frequency of notch filter 1	0.0 to 4000.0	4000.0	-	Changeable at any time
CD-97	0xCD61	Center frequency of notch filter 2	0.0 to 4000.0	4000.0	-	Changeable at any time
CD-98	0xCD62	Integral setting control word	0: Disabled 1: Enabled Others: B connector	0	-	Changeable at any time
CD-99	0xCD63	Integral reference source	0: Digital setting 1: AI1 2: AI2 3: AI3 4: Pulse reference 5: Communication 6: Multi-reference 7: Motor-driven potentiometer 8: PID Others: F connector	0	-	Changeable at any time
CE-00	0xCE00	Externally transferred acceleration	0: Inactive 1: AI1 2: AI2 3: AI3 4: Pulse reference 5: Communication 6: Multi-reference 7: Motor-driven potentiometer 8: PID Others: F connector	0	-	Changeable at any time
CE-03	0xCE03	Overturning torque limiting coefficient	0.0% to 400.0%	100.0	%	Changeable at any time
CE-04	0xCE04	Motoring power limiting coefficient	0.0% to 400.0%	400.0	%	Changeable at any time

Para.	Comm. Addr.	Name	Reference	De fault	Unit	Change
CE-05	0xCE05	Generating power limiting coefficient	0.0% to 400.0%	400.0	%	Changeable at any time
CE-06	0xCE06	Overspeed limiting enable	0 to 1	1	-	Changeable at any time
CE-07	0xCE07	Sine wave frequency of bandwidth test	0 Hz to 1000 Hz	0	Hz	Changeable at any time
CE-08	0xCE08	Sine wave amplitude of bandwidth test	0% to 100%	0	%	Changeable at any time
CE-09	0xCE09	Bandwidth test enable	0 to 4	0	-	Changeable at any time
CE-11	0xCE0B	Speed loop parameter calculation mode	0: New solution 1: Compatible solution	1	-	Changeable only at stop
CE-12	0xCE0C	Speed loop proportional gain in FVC mode	0.00 Hz to 100.00 Hz	8.00	Hz	Changeable at any time
CE-13	0xCE0D	Speed loop integral time in FVC mode	0.000s to 20.000s	0.080	s	Changeable at any time
CE-14	0xCE0E	Speed loop proportional gain in SVC mode	0.00 Hz to 100.00 Hz	5.00	Hz	Changeable at any time
CE-15	0xCE0F	Speed loop integral time in SVC mode	0.000s to 20.000s	0.127	s	Changeable at any time
CE-16	0xCE10	Low frequency proportional correction coefficient	0.0% to 1000.0%	100.0	%	Changeable at any time
CE-17	0xCE11	Low frequency integral correction coefficient	0.0% to 1000.0%	100.0	%	Changeable at any time
CE-18	0xCE12	Speed loop adaption factor	0.000 to 10.000	0.200	-	Changeable at any time
CE-19	0xCE13	Speed loop adaption switchover lower limit	0.000 to 10.000	0.400	-	Changeable at any time
CE-20	0xCE14	Speed loop adaption switchover upper limit	0.000 to 10.000	1.000	-	Changeable at any time
CE-21	0xCE15	Speed loop adaption correction upper limit	0.0% to 1000.0%	100.0	%	Changeable at any time

Para.	Comm. Addr.	Name	Reference	De fault	Unit	Change
CE-22	0xCE16	Speed loop adaption correction lower limit	0.0% to 1000.0%	100.0	%	Changeable at any time
CE-23	0xCE17	Flux adaptation enable	0 to 1	0	-	Changeable at any time
CE-24	0xCE18	Overspeed controller correction coefficient	0.0% to 1000.0%	100.0	%	Changeable at any time
CE-25	0xCE19	VDC control command word	Bit00: VdcMin 0: Disabled 1: Enabled Bit01: VdcMax 0: Disabled 1: Enabled Bit02: Automatic calculation of VDC trigger voltage 0: Disabled 1: Enabled Bit03: VDC control integral action 0: Disabled 1: Enabled	0	-	Changeable at any time
CE-26	0xCE1A	Bus capacitance ratio	50.0% to 1000.0%	100.0	%	Changeable at any time
CE-27	0xCE1B	Undervoltage suppression exit hysteresis frequency	0.00 Hz to 10.00 Hz	3.00	Hz	Changeable at any time
CE-28	0xCE1C	Minimum VDC failure speed threshold	0.00 Hz to 20.00 Hz	2.00	Hz	Changeable at any time
CE-29	0xCE1D	Dynamic adjustment coefficient	0.0% to 1000.0%	100.0	%	Changeable at any time
CE-30	0xCE1E	Minimum VDC activation voltage	320.0 V to 540.0 V	430.0	V	Changeable at any time
CE-31	0xCE1F	Maximum VDC activation voltage	650.0 V to 800.0 V	770.0	V	Changeable at any time

Para.	Comm. Addr.	Name	Reference	De fault	Unit	Change
CE-32	0xCE20	Flux linkage control command word	Bit00: Output voltage limit calculation filtering mode 0: Symmetric filtering 1: Asymmetric filtering Bit01: Asynchronous motor inverse proportion curve calculation 0: The inverse proportional synchronization frequency decreases. 1: The inverse proportional speed decreases. Bit02: Flux linkage feedforward calculation by using inverse proportional speed 0: Disabled 1: Enabled Bit03: Reserved Bit04: Reserved Bit05: Field weakening adjustment 0: Disabled 1: Enabled Bit06: Flux linkage derivative feedforward 0: Disabled 1: Enabled Bit07: Energy conservation control 0: Disabled 1: Enabled Bit08: Asynchronous motor flux closed loop 0: Disabled 1: Enabled Bit09: Reserved Bit10: Reserved Bit11: Asynchronous motor pre-excitation mode 0: Pre-excitation based on time 1: Pre-excitation based on current Bit12: Asynchronous motor pre-excitation current 0: Reference current 1: Maximum current allowed by the drive	2357	-	Changeable at any time
CE-33	0xCE21	Output voltage upper limit margin for field weakening adjustment	1% to 50%	5	%	Changeable at any time
CE-34	0xCE22	Output voltage upper limit margin for auto adjustment of field weakening	1% to 20%	3	%	Changeable at any time
CE-35	0xCE23	Filter time for calculating maximum output voltage	0 ms to 3000 ms	30	ms	Changeable at any time

Para.	Comm. Addr.	Name	Reference	De fault	Unit	Change
CE-36	0xCE24	Rated flux adjustment coefficient for calculation	0.5 to 2.0	1.0	-	Changeable at any time
CE-37	0xCE25	Field weakening frequency adjustment coefficient for calculation	0.8 to 1.2	1.0	-	Changeable at any time
CE-38	0xCE26	Slip filter time for calculating field weakening frequency	0 ms to 3000 ms	62	ms	Changeable at any time
CE-39	0xCE27	Feedback speed filtering	0 ms to 8000 ms	50	ms	Changeable at any time
CE-40	0xCE28	Flux linkage rising filter time	0 ms to 8000 ms	20	ms	Changeable at any time
CE-42	0xCE2A	Feedback voltage filter time	0 ms to 3000 ms	5	ms	Changeable at any time
CE-43	0xCE2B	Maximum demagnetization current of synchronous motor	0% to 500%	300	%	Changeable at any time
CE-44	0xCE2C	Voltage outer loop lower limit coefficient	0 to 500	50	-	Changeable at any time
CE-45	0xCE2D	Flux linkage derivative feedforward coefficient	0.0 to 1.5	1.0	-	Changeable at any time
CE-46	0xCE2E	Flux linkage derivative feedforward filter time	0 ms to 3000 ms	6	ms	Changeable at any time
CE-47	0xCE2F	Torque current rising filter time under energy conservation control	0 ms to 3000 ms	50	ms	Changeable at any time
CE-48	0xCE30	Torque current falling filter time under energy conservation control	0 ms to 3000 ms	100	ms	Changeable at any time

Para.	Comm. Addr.	Name	Reference	De fault	Unit	Change
CE-49	0xCE31	Flux linkage lower limit coefficient under energy conservation control	0.00 to 0.50	0.10	-	Changeable at any time
CE-51	0xCE33	Pre-excitation current	1% to 200%	100	%	Changeable at any time
CE-52	0xCE34	Pre-excitation time	1 ms to 30000 ms	1000	ms	Changeable at any time
CE-53	0xCE35	Flux linkage closed-loop bandwidth frequency	0.0 Hz to 100.0 Hz	2.0	Hz	Changeable at any time
CE-54	0xCE36	Feedback flux linkage filter time coefficient	0 to 200	4	-	Changeable at any time
CE-55	0xCE37	Static output flux linkage filter time	0 ms to 5000 ms	10	ms	Changeable at any time
CE-56	0xCE38	Current loop mode	0: ImCsr2 mode 1: Complex vector mode 2: 880 mode 3: No field weakening	1	-	Changeable only at stop
CE-57	0xCE39	PI regulator proportional gain adaptation with load	0: Disabled 1: Enabled	0	-	Changeable only at stop
CE-58	0xCE3A	Current loop damping	0.2 to 5.0	0.8	-	Changeable at any time
CE-59	0xCE3B	Low-speed current loop Kp adjustment	0.1 to 10.0	1.0	-	Changeable at any time
CE-60	0xCE3C	High-speed current loop Kp adjustment	0.1 to 10.0	1.0	-	Changeable at any time
CE-61	0xCE3D	Low-speed current loop Ki adjustment	0.1 to 10.0	1.0	-	Changeable at any time
CE-62	0xCE3E	High-speed current loop Ki adjustment	0.1 to 10.0	2.0	-	Changeable at any time
CE-63	0xCE3F	D-axis current loop complex vector adjustment	0.1 to 10.0	1.0	-	Changeable at any time
CE-64	0xCE40	Q-axis current loop complex vector adjustment	0.1 to 10.0	1.0	-	Changeable at any time

Para.	Comm. Addr.	Name	Reference	De fault	Unit	Change
CE-65	0xCE41	Complex vector hysteresis frequency lower limit as a percentage of rated frequency	0% to CE-66	0	%	Changeable at any time
CE-66	0xCE42	Complex vector hysteresis frequency upper limit as a percentage of rated frequency	CE-65 to 150%	0	%	Changeable at any time
CE-67	0xCE43	ImCsr2 hysteresis switchover voltage upper limit as a percentage of saturation voltage	CE-68 to 95%	89	%	Changeable at any time
CE-68	0xCE44	ImCsr2 hysteresis switchover voltage lower limit as a percentage of saturation voltage	60% to CE-67	79	%	Changeable at any time
CE-69	0xCE45	ImCsr2 hysteresis switchover frequency hysteresis range as a percentage of rated frequency	1% to 30%	10	%	Changeable at any time
CE-70	0xCE46	ImCsr2 hysteresis switchover frequency lower limit (below which the hysteresis condition does not take effect) as a percentage of the rated frequency	40% to 80%	60	%	Changeable at any time
CE-71	0xCE47	ImCsr2 current loop Kss adjustment	0.1 to 10.0	1.0	-	Changeable at any time
CE-72	0xCE48	Proportional gain adjustment coefficient corresponding to the maximum torque when proportional gain is adjusted with load	0.1 to 1.0	0.5	-	Changeable at any time

Para.	Comm. Addr.	Name	Reference	De fault	Unit	Change
CE-73	0xCE49	Torque upper limit setpoint as a percentage of rated torque when proportional gain is adjusted with load	CE-74 to 300%	200	%	Changeable at any time
CE-74	0xCE4A	Torque lower limit setpoint as a percentage of rated torque when proportional gain is adjusted with load	10% to CE-73	100	%	Changeable at any time
CE-75	0xCE4B	Derivative feedforward adjustment	0.0 to 1.0	0.0	-	Changeable at any time
CE-76	0xCE4C	Decoupling control start frequency as a percentage of rated frequency	20% to 150%	40	%	Changeable at any time
CE-77	0xCE4D	Decoupling control filter time adjustment coefficient	0.1 to 3.0	1.0	-	Changeable at any time
CE-78	0xCE4E	Decoupling control output adjustment coefficient	0.0 to 1.0	1.0	-	Changeable at any time
CE-79	0xCE4F	CPC feedforward enable	0: Disabled 1: Enabled	0	-	Changeable at any time
CE-80	0xCE50	Current loop auxiliary command word	Bit00: Complex vector angle limiting 0: Disabled 1: Enabled Bit01: Voltage angle limiting 0: Program internal limiting 1: Parameter setting Bit02: 0 by default 0: No lower limit on the excitation current is imposed during the dynamic process. 1: A lower limit on the excitation current is imposed during the dynamic process in ImCsr2 mode. Bit03–Bit15: Reserved (0 by default)	0	-	Changeable at any time
CE-81	0xCE51	Voltage angle upper limit	90° to 180°	150	°	Changeable at any time
CE-82	0xCE52	Voltage angle lower limit	0° to 90°	30	°	Changeable at any time

Para.	Comm. Addr.	Name	Reference	De fault	Unit	Change
CE-83	0xCE53	Asynchronous motor D axis integral limit	0.500 to 1.000	0.707	-	Changeable at any time
CE-84	0xCE54	Current loop carrier frequency upper limit	5.0 to 16.0	8.0	-	Changeable at any time
CE-85	0xCE55	Droop enable	0 to 1	0	-	Changeable only at stop
CE-86	0xCE56	Droop source	0: Line current 1: Torque reference 2: Speed adjustment output 3: Speed adjustment integral component	1	-	Changeable only at stop
CE-87	0xCE57	Frequency reference droop coefficient	0.0% to 50.0%	0.0	%	Changeable at any time
CE-88	0xCE58	FVC-SVC switchover mode	0: No switchover 1: Active switchover 2: Passive switchover (The AC drive switches to SVC mode upon detection of encoder wire breakage, and it switches back to FVC mode when the encoder recovers during stop and does not switch back to FVC mode when the encoder recovers during running.) 3: Passive switchover (The AC drive switches to SVC mode upon detection of encoder wire breakage, and it switches back to FVC mode when the encoder recovers during running or stop.)	0	-	Changeable only at stop
CE-89	0xCE59	FVC-SVC switchover frequency	10% to 500%	50	%	Changeable only at stop
CE-90	0xCE5A	FVC-SVC switchover hysteresis	10% to 100%	10	%	Changeable only at stop
H0-00	0x8000	Code of active fault 1	0 to 65535	0	-	Unchangea ble
H0-01	0x8001	Subcode of active fault 1	0 to 65535	0	-	Unchangea ble
H0-02	0x8002	Information of active fault 1	0 to 65535	0	-	Unchangea ble
H0-03	0x8003	Code of active fault 2	0 to 65535	0	-	Unchangea ble
H0-04	0x8004	Subcode of active fault 2	0 to 65535	0	-	Unchangea ble
H0-05	0x8005	Information of active fault 2	0 to 65535	0	-	Unchangea ble
H0-06	0x8006	Code of active fault 3	0 to 65535	0	-	Unchangea ble

Para.	Comm. Addr.	Name	Reference	De fault	Unit	Change
H0-07	0x8007	Subcode of active fault 3	0 to 65535	0	-	Unchangea ble
H0-08	0x8008	Information of active fault 3	0 to 65535	0	-	Unchangea ble
H0-09	0x8009	Code of active fault 4	0 to 65535	0	-	Unchangea ble
H0-10	0x800A	Subcode of active fault 4	0 to 65535	0	-	Unchangea ble
H0-11	0x800B	Information of active fault 4	0 to 65535	0	-	Unchangea ble
H0-12	0x800C	Code of active fault 5	0 to 65535	0	-	Unchangea ble
H0-13	0x800D	Subcode of active fault 5	0 to 65535	0	-	Unchangea ble
H0-14	0x800E	Information of active fault 5	0 to 65535	0	-	Unchangea ble
H0-15	0x800F	Code of active fault 6	0 to 65535	0	-	Unchangea ble
H0-16	0x8010	Subcode of active fault 6	0 to 65535	0	-	Unchangea ble
H0-17	0x8011	Information of active fault 6	0 to 65535	0	-	Unchangea ble
H0-18	0x8012	Code of active limit 1	0 to 65535	0	-	Unchangea ble
H0-19	0x8013	Subcode of active limit 1	0 to 65535	0	-	Unchangea ble
H0-20	0x8014	Information of active limit 1	0 to 65535	0	-	Unchangea ble
H0-21	0x8015	Code of active limit 2	0 to 65535	0	-	Unchangea ble
H0-22	0x8016	Subcode of active limit 2	0 to 65535	0	-	Unchangea ble
H0-23	0x8017	Information of active limit 2	0 to 65535	0	-	Unchangea ble
H0-24	0x8018	Code of active limit 3	0 to 65535	0	-	Unchangea ble
H0-25	0x8019	Subcode of active limit 3	0 to 65535	0	-	Unchangea ble
H0-26	0x801A	Information of active limit 3	0 to 65535	0	-	Unchangea ble
H0-27	0x801B	Code of active limit 4	0 to 65535	0	-	Unchangea ble
H0-28	0x801C	Subcode of active limit 4	0 to 65535	0	-	Unchangea ble
H0-29	0x801D	Information of active limit 4	0 to 65535	0	-	Unchangea ble

Para.	Comm. Addr.	Name	Reference	De fault	Unit	Change
H0-30	0x801E	Code of active limit 5	0 to 65535	0	-	Unchangea ble
H0-31	0x801F	Subcode of active limit 5	0 to 65535	0	-	Unchangea ble
H0-32	0x8020	Information of active limit 5	0 to 65535	0	-	Unchangea ble
H0-33	0x8021	Code of active limit 6	0 to 65535	0	-	Unchangea ble
H0-34	0x8022	Subcode of active limit 6	0 to 65535	0	-	Unchangea ble
H0-35	0x8023	Information of active limit 6	0 to 65535	0	-	Unchangea ble
H0-36	0x8024	Code of active alarm 1	0 to 65535	0	-	Unchangea ble
H0-37	0x8025	Subcode of active alarm 1	0 to 65535	0	-	Unchangea ble
H0-38	0x8026	Information of active alarm 1	0 to 65535	0	-	Unchangea ble
H0-39	0x8027	Code of active alarm 2	0 to 65535	0	-	Unchangea ble
H0-40	0x8028	Subcode of active alarm 2	0 to 65535	0	-	Unchangea ble
H0-41	0x8029	Information of active alarm 2	0 to 65535	0	-	Unchangea ble
H0-42	0x802A	Code of active alarm 3	0 to 65535	0	-	Unchangea ble
H0-43	0x802B	Subcode of active alarm 3	0 to 65535	0	-	Unchangea ble
H0-44	0x802C	Information of active alarm 3	0 to 65535	0	-	Unchangea ble
H0-45	0x802D	Code of active alarm 4	0 to 65535	0	-	Unchangea ble
H0-46	0x802E	Subcode of active alarm 4	0 to 65535	0	-	Unchangea ble
H0-47	0x802F	Information of active alarm 4	0 to 65535	0	-	Unchangea ble
H0-48	0x8030	Code of active alarm 5	0 to 65535	0	-	Unchangea ble
H0-49	0x8031	Subcode of active alarm 5	0 to 65535	0	-	Unchangea ble
H0-50	0x8032	Information of active alarm 5	0 to 65535	0	-	Unchangea ble
H0-51	0x8033	Code of active alarm 6	0 to 65535	0	-	Unchangea ble
H0-52	0x8034	Subcode of active alarm 6	0 to 65535	0	-	Unchangea ble

Para.	Comm. Addr.	Name	Reference	De fault	Unit	Change
H0-53	0x8035	Information of active alarm 6	0 to 65535	0	-	Unchangea ble
H1-00	0x8100	Fault code of exceptions in group 1	0.0 to 199.9	0.0	-	Changeable only at stop
H1-01	0x8101	Handling of exceptions in group 1	0: Coast to stop 1: Stop according to the stop mode 2: Continue to run 3: Run with power limit 4: Run with current limit 5: Ignore 6: No action	6	-	Changeable only at stop
H1-02	0x8102	Fault code of exceptions in group 2	0.0 to 199.9	0.0	-	Changeable only at stop
H1-03	0x8103	Handling of exceptions in group 2	Same as H1-01	6	-	Changeable only at stop
H1-04	0x8104	Fault code of exceptions in group 3	0.0 to 199.9	0.0	-	Changeable only at stop
H1-05	0x8105	Handling of exceptions in group 3	Same as H1-01	6	-	Changeable only at stop
H1-06	0x8106	Fault code of exceptions in group 4	0.0 to 199.9	0.0	-	Changeable only at stop
H1-07	0x8107	Handling of exceptions in group 4	Same as H1-01	6	-	Changeable only at stop
H1-08	0x8108	Fault code of exceptions in group 5	0.0 to 199.9	0.0	-	Changeable only at stop
H1-09	0x8109	Handling of exceptions in group 5	Same as H1-01	6	-	Changeable only at stop
H1-10	0x810A	Fault code of exceptions in group 6	0.0 to 199.9	0.0	-	Changeable only at stop
H1-11	0x810B	Handling of exceptions in group 6	Same as H1-01	6	-	Changeable only at stop
H1-12	0x810C	Fault code of exceptions in group 7	0.0 to 199.9	0.0	-	Changeable only at stop
H1-13	0x810D	Handling of exceptions in group 7	Same as H1-01	6	-	Changeable only at stop

Para.	Comm. Addr.	Name	Reference	De fault	Unit	Change
H1-14	0x810E	Fault code of exceptions in group 8	0.0 to 199.9	0.0	-	Changeable only at stop
H1-15	0x810F	Handling of exceptions in group 8	Same as H1-01	6	-	Changeable only at stop
H1-16	0x8110	Fault code of exceptions in group 9	0.0 to 199.9	0.0	-	Changeable only at stop
H1-17	0x8111	Handling of exceptions in group 9	Same as H1-01	6	-	Changeable only at stop
H1-18	0x8112	Fault code of exceptions in group 10	0.0 to 199.9	0.0	-	Changeable only at stop
H1-19	0x8113	Handling of exceptions in group 10	Same as H1-01	6	-	Changeable only at stop
H2-00	0x8200	Source of external fault 1 (NO)	0: Inactive 1: Active Others: B connector	0	-	Changeable at any time
H2-01	0x8201	Source of external fault 2 (NC)	Same as H2-00	1	-	Changeable at any time
H2-02	0x8202	Source of external alarm 1	0: Reserved Others: B connector	0	-	Changeable at any time
H2-03	0x8203	Source of external alarm 2	Same as H2-02	0	-	Changeable at any time
H2-04	0x8204	Source of custom fault 1	0: Inactive 1: Active Others: B connector	0	-	Changeable at any time
H2-05	0x8205	Source of custom fault 2	Same as H2-04	0	-	Changeable at any time
H2-06	0x8206	Source of custom fault 3	0: Reserved Others: B connector	0	-	Changeable at any time
H2-07	0x8207	Source of custom fault 4	0: Reserved Others: B connector	0	-	Changeable at any time
H2-08	0x8208	Source of custom alarm 1	Same as H2-07	0	-	Changeable at any time
H2-09	0x8209	Source of custom alarm 2	Same as H2-07	0	-	Changeable at any time
H2-10	0x820A	Source of custom alarm 3	Same as H2-07	0	-	Changeable at any time
H2-11	0x820B	Source of custom alarm 4	Same as H2-07	0	-	Changeable at any time
H2-12	0x820C	Auto reset enable	0 to 1	1	-	Changeable at any time

Para.	Comm. Addr.	Name	Reference	De fault	Unit	Change
H2-15	0x820F	Auto reset disabled upon manual reset	0: Yes 1: No	1	-	Changeable at any time
H2-16	0x8210	Interval for clearing auto reset count	0 min to 6000 min	10	min	Changeable at any time
H2-17	0x8211	Active fault reset attempt count	0 to 65535	0	-	Unchangea ble
H2-18	0x8212	Clearing upon fault reset count reach	0: Cleared 1: Not cleared	0	-	Changeable at any time
H2-20	0x8214	Code of non-resettable exception 1	0 to 200	0	-	Changeable at any time
H2-21	0x8215	Subcode of non-resettable exception 1	0 to 9	0	-	Changeable at any time
H2-22	0x8216	Code of non-resettable exception 2	0 to 200	0	-	Changeable at any time
H2-23	0x8217	Subcode of non-resettable exception 2	0 to 9	0	-	Changeable at any time
H2-24	0x8218	Code of non-resettable exception 3	0 to 200	0	-	Changeable at any time
H2-25	0x8219	Subcode of non-resettable exception 3	0 to 9	0	-	Changeable at any time
H2-26	0x821A	Code of non-resettable exception 4	0 to 200	0	-	Changeable at any time
H2-27	0x821B	Subcode of non-resettable exception 4	0 to 9	0	-	Changeable at any time
H2-28	0x821C	Code of non-resettable exception 5	0 to 200	0	-	Changeable at any time
H2-29	0x821D	Subcode of non-resettable exception 5	0 to 9	0	-	Changeable at any time
H2-30	0x821E	Code of non-resettable exception 6	0 to 200	0	-	Changeable at any time
H2-31	0x821F	Subcode of non-resettable exception 6	0 to 9	0	-	Changeable at any time

Para.	Comm. Addr.	Name	Reference	De fault	Unit	Change
H2-32	0x8220	Code of non-resettable exception 7	0 to 200	0	-	Changeable at any time
H2-33	0x8221	Subcode of non-resettable exception 7	0 to 9	0	-	Changeable at any time
H2-34	0x8222	Code of non-resettable exception 8	0 to 200	0	-	Changeable at any time
H2-35	0x8223	Subcode of non-resettable exception 8	0 to 9	0	-	Changeable at any time
H2-36	0x8224	Code of non-resettable exception 9	0 to 200	0	-	Changeable at any time
H2-37	0x8225	Subcode of non-resettable exception 9	0 to 9	0	-	Changeable at any time
H2-38	0x8226	Code of non-resettable exception 10	0 to 200	0	-	Changeable at any time
H2-39	0x8227	Subcode of non-resettable exception 10	0 to 9	0	-	Changeable at any time
H2-42	0x822A	Restart after auto reset	0 to 1	0	-	Changeable at any time
H2-43	0x822B	Waiting time of restart after auto reset	0.0s to 600.0s	0.5	s	Changeable at any time
H2-44	0x822C	Forced flying start during auto restart	0 to 1	0	-	Changeable at any time
H2-45	0x822D	Source of exceptions that allow restart	0: Whitelist 1: Blacklist	1	-	Changeable at any time
H2-46	0x822E	Code of specified exception 1	0 to 200	0	-	Changeable at any time
H2-47	0x822F	Subcode of specified exception 1	0 to 9	0	-	Changeable at any time
H2-48	0x8230	Code of specified exception 2	0 to 200	0	-	Changeable at any time
H2-49	0x8231	Subcode of specified exception 2	0 to 9	0	-	Changeable at any time
H2-50	0x8232	Code of specified exception 3	0 to 200	0	-	Changeable at any time

Para.	Comm. Addr.	Name	Reference	De fault	Unit	Change
H2-51	0x8233	Subcode of specified exception 3	0 to 9	0	-	Changeable at any time
H2-52	0x8234	Code of specified exception 4	0 to 200	0	-	Changeable at any time
H2-53	0x8235	Subcode of specified exception 4	0 to 9	0	-	Changeable at any time
H2-54	0x8236	Code of specified exception 5	0 to 200	0	-	Changeable at any time
H2-55	0x8237	Subcode of specified exception 5	0 to 9	0	-	Changeable at any time
H2-56	0x8238	Code of specified exception 6	0 to 200	0	-	Changeable at any time
H2-57	0x8239	Subcode of specified exception 6	0 to 9	0	-	Changeable at any time
H3-00	0x8300	Code of active fault 1	0 to 65535	0	-	Unchangea ble
H3-01	0x8301	Subcode of active fault 1	0 to 65535	0	-	Unchangea ble
H3-02	0x8302	Information of active fault 1	0 to 65535	0	-	Unchangea ble
H3-03	0x8303	Self diagnosis information 1	0 to 65535	0	-	Unchangea ble
H3-04	0x8304	Self diagnosis information 2	0 to 65535	0	-	Unchangea ble
H3-05	0x8305	Self diagnosis information 3	0 to 65535	0	-	Unchangea ble
H3-06	0x8306	Self diagnosis information 4	0 to 65535	0	-	Unchangea ble
H3-07	0x8307	Code of active fault 2	0 to 65535	0	-	Unchangea ble
H3-08	0x8308	Subcode of active fault 2	0 to 65535	0	-	Unchangea ble
H3-09	0x8309	Information of active fault 2	0 to 65535	0	-	Unchangea ble
H3-10	0x830A	Self diagnosis information 1	0 to 65535	0	-	Unchangea ble
H3-11	0x830B	Self diagnosis information 2	0 to 65535	0	-	Unchangea ble
H3-12	0x830C	Self diagnosis information 3	0 to 65535	0	-	Unchangea ble
H3-13	0x830D	Self diagnosis information 4	0 to 65535	0	-	Unchangea ble

Para.	Comm. Addr.	Name	Reference	De fault	Unit	Change
H3-14	0x830E	Code of active fault 3	0 to 65535	0	-	Unchangea ble
H3-15	0x830F	Subcode of active fault 3	0 to 65535	0	-	Unchangea ble
H3-16	0x8310	Information of active fault 3	0 to 65535	0	-	Unchangea ble
H3-17	0x8311	Self diagnosis information 1	0 to 65535	0	-	Unchangea ble
H3-18	0x8312	Self diagnosis information 2	0 to 65535	0	-	Unchangea ble
H3-19	0x8313	Self diagnosis information 3	0 to 65535	0	-	Unchangea ble
H3-20	0x8314	Self diagnosis information 4	0 to 65535	0	-	Unchangea ble
H3-21	0x8315	Code of active fault 4	0 to 65535	0	-	Unchangea ble
H3-22	0x8316	Subcode of active fault 4	0 to 65535	0	-	Unchangea ble
H3-23	0x8317	Information of active fault 4	0 to 65535	0	-	Unchangea ble
H3-24	0x8318	Self diagnosis information 1	0 to 65535	0	-	Unchangea ble
H3-25	0x8319	Self diagnosis information 2	0 to 65535	0	-	Unchangea ble
H3-26	0x831A	Self diagnosis information 3	0 to 65535	0	-	Unchangea ble
H3-27	0x831B	Self diagnosis information 4	0 to 65535	0	-	Unchangea ble
H3-28	0x831C	Code of active fault 5	0 to 65535	0	-	Unchangea ble
H3-29	0x831D	Subcode of active fault 5	0 to 65535	0	-	Unchangea ble
H3-30	0x831E	Information of active fault 5	0 to 65535	0	-	Unchangea ble
H3-31	0x831F	Self diagnosis information 1	0 to 65535	0	-	Unchangea ble
H3-32	0x8320	Self diagnosis information 2	0 to 65535	0	-	Unchangea ble
H3-33	0x8321	Self diagnosis information 3	0 to 65535	0	-	Unchangea ble
H3-34	0x8322	Self diagnosis information 4	0 to 65535	0	-	Unchangea ble
H3-35	0x8323	Code of active fault 6	0 to 65535	0	-	Unchangea ble
H3-36	0x8324	Subcode of active fault 6	0 to 65535	0	-	Unchangea ble

Para.	Comm. Addr.	Name	Reference	De fault	Unit	Change
H3-37	0x8325	Information of active fault 6	0 to 65535	0	-	Unchangea ble
H3-38	0x8326	Self diagnosis information 1	0 to 65535	0	-	Unchangea ble
H3-39	0x8327	Self diagnosis information 2	0 to 65535	0	-	Unchangea ble
H3-40	0x8328	Self diagnosis information 3	0 to 65535	0	-	Unchangea ble
H3-41	0x8329	Self diagnosis information 4	0 to 65535	0	-	Unchangea ble
H3-42	0x832A	Frequency upon the active fault	0.00 Hz to 655.35 Hz	0.00	Hz	Unchangea ble
H3-43	0x832B	Current upon the active fault	0.00 A to 655.35 A	0.00	A	Unchangea ble
H3-44	0x832C	Bus voltage upon the active fault	0.0 V to 6553.5 V	0.0	V	Unchangea ble
H3-45	0x832D	Input terminal state upon the active fault	0x0 to 0xFFFF	0x0	-	Unchangea ble
H3-46	0x832E	Output terminal state upon the active fault	0x0 to 0xFFFF	0x0	-	Unchangea ble
H3-47	0x832F	AC drive state upon the active fault	0 to 65535	0	-	Unchangea ble
H3-48	0x8330	Power-on duration upon the active fault	0 min to 65535 min	0	min	Unchangea ble
H3-49	0x8331	Running duration upon the active fault	0.0 min to 6553.5 min	0.0	min	Unchangea ble
H3-50	0x8332	Status word A upon the active fault	0x0 to 0xFFFF	0x0	-	Unchangea ble
H3-51	0x8333	Status word B upon the active fault	0x0 to 0xFFFF	0x0	-	Unchangea ble
H3-52	0x8334	Command word upon the active fault	0x0 to 0xFFFF	0x0	-	Unchangea ble
H4-00	0x8400	Code of the latest fault 1	0 to 65535	0	-	Unchangea ble
H4-01	0x8401	Subcode of the latest fault 1	0 to 65535	0	-	Unchangea ble
H4-02	0x8402	Information of the latest fault 1	0 to 65535	0	-	Unchangea ble
H4-03	0x8403	Self diagnosis information 1	0 to 65535	0	-	Unchangea ble
H4-04	0x8404	Self diagnosis information 2	0 to 65535	0	-	Unchangea ble

Para.	Comm. Addr.	Name	Reference	De fault	Unit	Change
H4-05	0x8405	Self diagnosis information 3	0 to 65535	0	-	Unchangea ble
H4-06	0x8406	Self diagnosis information 4	0 to 65535	0	-	Unchangea ble
H4-07	0x8407	Code of the latest fault 2	0 to 65535	0	-	Unchangea ble
H4-08	0x8408	Subcode of the latest fault 2	0 to 65535	0	-	Unchangea ble
H4-09	0x8409	Information of the latest fault 2	0 to 65535	0	-	Unchangea ble
H4-10	0x840A	Self diagnosis information 1	0 to 65535	0	-	Unchangea ble
H4-11	0x840B	Self diagnosis information 2	0 to 65535	0	-	Unchangea ble
H4-12	0x840C	Self diagnosis information 3	0 to 65535	0	-	Unchangea ble
H4-13	0x840D	Self diagnosis information 4	0 to 65535	0	-	Unchangea ble
H4-14	0x840E	Code of the latest fault 3	0 to 65535	0	-	Unchangea ble
H4-15	0x840F	Subcode of the latest fault 3	0 to 65535	0	-	Unchangea ble
H4-16	0x8410	Information of the latest fault 3	0 to 65535	0	-	Unchangea ble
H4-17	0x8411	Self diagnosis information 1	0 to 65535	0	-	Unchangea ble
H4-18	0x8412	Self diagnosis information 2	0 to 65535	0	-	Unchangea ble
H4-19	0x8413	Self diagnosis information 3	0 to 65535	0	-	Unchangea ble
H4-20	0x8414	Self diagnosis information 4	0 to 65535	0	-	Unchangea ble
H4-21	0x8415	Code of the latest fault 4	0 to 65535	0	-	Unchangea ble
H4-22	0x8416	Subcode of the latest fault 4	0 to 65535	0	-	Unchangea ble
H4-23	0x8417	Information of the latest fault 4	0 to 65535	0	-	Unchangea ble
H4-24	0x8418	Self diagnosis information 1	0 to 65535	0	-	Unchangea ble
H4-25	0x8419	Self diagnosis information 2	0 to 65535	0	-	Unchangea ble
H4-26	0x841A	Self diagnosis information 3	0 to 65535	0	-	Unchangea ble
H4-27	0x841B	Self diagnosis information 4	0 to 65535	0	-	Unchangea ble

Para.	Comm. Addr.	Name	Reference	De fault	Unit	Change
H4-28	0x841C	Code of the latest fault 5	0 to 65535	0	-	Unchangea ble
H4-29	0x841D	Subcode of the latest fault 5	0 to 65535	0	-	Unchangea ble
H4-30	0x841E	Information of the latest fault 5	0 to 65535	0	-	Unchangea ble
H4-31	0x841F	Self diagnosis information 1	0 to 65535	0	-	Unchangea ble
H4-32	0x8420	Self diagnosis information 2	0 to 65535	0	-	Unchangea ble
H4-33	0x8421	Self diagnosis information 3	0 to 65535	0	-	Unchangea ble
H4-34	0x8422	Self diagnosis information 4	0 to 65535	0	-	Unchangea ble
H4-35	0x8423	Code of the latest fault 6	0 to 65535	0	-	Unchangea ble
H4-36	0x8424	Subcode of the latest fault 6	0 to 65535	0	-	Unchangea ble
H4-37	0x8425	Information of the latest fault 6	0 to 65535	0	-	Unchangea ble
H4-38	0x8426	Self diagnosis information 1	0 to 65535	0	-	Unchangea ble
H4-39	0x8427	Self diagnosis information 2	0 to 65535	0	-	Unchangea ble
H4-40	0x8428	Self diagnosis information 3	0 to 65535	0	-	Unchangea ble
H4-41	0x8429	Self diagnosis information 4	0 to 65535	0	-	Unchangea ble
H4-42	0x842A	Frequency upon the latest fault	0.00 Hz to 655.35 Hz	0.00	Hz	Unchangea ble
H4-43	0x842B	Current upon the latest fault	0.00 A to 655.35 A	0.00	A	Unchangea ble
H4-44	0x842C	Bus voltage upon the latest fault	0.0 V to 6553.5 V	0.0	V	Unchangea ble
H4-45	0x842D	Input terminal state upon the latest fault	0x0 to 0xFFFF	0x0	-	Unchangea ble
H4-46	0x842E	Output terminal state upon the latest fault	0x0 to 0xFFFF	0x0	-	Unchangea ble
H4-47	0x842F	AC drive state upon the latest fault	0 to 65535	0	-	Unchangea ble
H4-48	0x8430	Power-on duration upon the latest fault	0 min to 65535 min	0	min	Unchangea ble

Para.	Comm. Addr.	Name	Reference	De fault	Unit	Change
H4-49	0x8431	Running duration upon the latest fault	0.0 min to 6553.5 min	0.0	min	Unchangea ble
H4-50	0x8432	Status word A upon the latest fault	0x0 to 0xFFFF	0x0	-	Unchangea ble
H4-51	0x8433	Status word B upon the latest fault	0x0 to 0xFFFF	0x0	-	Unchangea ble
H4-52	0x8434	Command word upon the latest fault	0x0 to 0xFFFF	0x0	-	Unchangea ble
H5-00	0x8500	Code of the second latest fault 1	0 to 65535	0	-	Unchangea ble
H5-01	0x8501	Subcode of the second latest fault 1	0 to 65535	0	-	Unchangea ble
H5-02	0x8502	Information of the second latest fault 1	0 to 65535	0	-	Unchangea ble
H5-03	0x8503	Self diagnosis information 1	0 to 65535	0	-	Unchangea ble
H5-04	0x8504	Self diagnosis information 2	0 to 65535	0	-	Unchangea ble
H5-05	0x8505	Self diagnosis information 3	0 to 65535	0	-	Unchangea ble
H5-06	0x8506	Self diagnosis information 4	0 to 65535	0	-	Unchangea ble
H5-07	0x8507	Code of the second latest fault 2	0 to 65535	0	-	Unchangea ble
H5-08	0x8508	Subcode of the second latest fault 2	0 to 65535	0	-	Unchangea ble
H5-09	0x8509	Information of the second latest fault 2	0 to 65535	0	-	Unchangea ble
H5-10	0x850A	Self diagnosis information 1	0 to 65535	0	-	Unchangea ble
H5-11	0x850B	Self diagnosis information 2	0 to 65535	0	-	Unchangea ble
H5-12	0x850C	Self diagnosis information 3	0 to 65535	0	-	Unchangea ble
H5-13	0x850D	Self diagnosis information 4	0 to 65535	0	-	Unchangea ble
H5-14	0x850E	Code of the second latest fault 3	0 to 65535	0	-	Unchangea ble
H5-15	0x850F	Subcode of the second latest fault 3	0 to 65535	0	-	Unchangea ble
H5-16	0x8510	Information of the second latest fault 3	0 to 65535	0	-	Unchangea ble
H5-17	0x8511	Self diagnosis information 1	0 to 65535	0	-	Unchangea ble

Para.	Comm. Addr.	Name	Reference	De fault	Unit	Change
H5-18	0x8512	Self diagnosis information 2	0 to 65535	0	-	Unchangea ble
H5-19	0x8513	Self diagnosis information 3	0 to 65535	0	-	Unchangea ble
H5-20	0x8514	Self diagnosis information 4	0 to 65535	0	-	Unchangea ble
H5-21	0x8515	Code of the second latest fault 4	0 to 65535	0	-	Unchangea ble
H5-22	0x8516	Subcode of the second latest fault 4	0 to 65535	0	-	Unchangea ble
H5-23	0x8517	Information of the second latest fault 4	0 to 65535	0	-	Unchangea ble
H5-24	0x8518	Self diagnosis information 1	0 to 65535	0	-	Unchangea ble
H5-25	0x8519	Self diagnosis information 2	0 to 65535	0	-	Unchangea ble
H5-26	0x851A	Self diagnosis information 3	0 to 65535	0	-	Unchangea ble
H5-27	0x851B	Self diagnosis information 4	0 to 65535	0	-	Unchangea ble
H5-28	0x851C	Code of the second latest fault 5	0 to 65535	0	-	Unchangea ble
H5-29	0x851D	Subcode of the second latest fault 5	0 to 65535	0	-	Unchangea ble
H5-30	0x851E	Information of the second latest fault 5	0 to 65535	0	-	Unchangea ble
H5-31	0x851F	Self diagnosis information 1	0 to 65535	0	-	Unchangea ble
H5-32	0x8520	Self diagnosis information 2	0 to 65535	0	-	Unchangea ble
H5-33	0x8521	Self diagnosis information 3	0 to 65535	0	-	Unchangea ble
H5-34	0x8522	Self diagnosis information 4	0 to 65535	0	-	Unchangea ble
H5-35	0x8523	Code of the second latest fault 6	0 to 65535	0	-	Unchangea ble
H5-36	0x8524	Subcode of the second latest fault 6	0 to 65535	0	-	Unchangea ble
H5-37	0x8525	Information of the second latest fault 6	0 to 65535	0	-	Unchangea ble
H5-38	0x8526	Self diagnosis information 1	0 to 65535	0	-	Unchangea ble
H5-39	0x8527	Self diagnosis information 2	0 to 65535	0	-	Unchangea ble
H5-40	0x8528	Self diagnosis information 3	0 to 65535	0	-	Unchangea ble

Para.	Comm. Addr.	Name	Reference	De fault	Unit	Change
H5-41	0x8529	Self diagnosis information 4	0 to 65535	0	-	Unchangea ble
H5-42	0x852A	Frequency upon the second latest fault	0.00 Hz to 655.35 Hz	0.00	Hz	Unchangea ble
H5-43	0x852B	Current upon the second latest fault	0.00 A to 655.35 A	0.00	A	Unchangea ble
H5-44	0x852C	Bus voltage upon the second latest fault	0.0 V to 6553.5 V	0.0	V	Unchangea ble
H5-45	0x852D	Input terminal state upon the second latest fault	0x0 to 0xFFFF	0x0	-	Unchangea ble
H5-46	0x852E	Output terminal state upon the second latest fault	0x0 to 0xFFFF	0x0	-	Unchangea ble
H5-47	0x852F	AC drive state upon the second latest fault	0 to 65535	0	-	Unchangea ble
H5-48	0x8530	Power-on duration upon the second latest fault	0 min to 65535 min	0	min	Unchangea ble
H5-49	0x8531	Running duration upon the second latest fault	0.0 min to 6553.5 min	0.0	min	Unchangea ble
H5-50	0x8532	Status word A upon the second latest fault	0x0 to 0xFFFF	0x0	-	Unchangea ble
H5-51	0x8533	Status word B upon the second latest fault	0x0 to 0xFFFF	0x0	-	Unchangea ble
H5-52	0x8534	Command word upon the second latest fault	0x0 to 0xFFFF	0x0	-	Unchangea ble
H6-00	0x8600	Code of the third latest fault 1	0 to 65535	0	-	Unchangea ble
H6-01	0x8601	Subcode of the third latest fault 1	0 to 65535	0	-	Unchangea ble
H6-02	0x8602	Information of the third latest fault 1	0 to 65535	0	-	Unchangea ble
H6-03	0x8603	Self diagnosis information 1	0 to 65535	0	-	Unchangea ble
H6-04	0x8604	Self diagnosis information 2	0 to 65535	0	-	Unchangea ble
H6-05	0x8605	Self diagnosis information 3	0 to 65535	0	-	Unchangea ble
H6-06	0x8606	Self diagnosis information 4	0 to 65535	0	-	Unchangea ble

Para.	Comm. Addr.	Name	Reference	De fault	Unit	Change
H6-07	0x8607	Code of the third latest fault 2	0 to 65535	0	-	Unchangea ble
H6-08	0x8608	Subcode of the third latest fault 2	0 to 65535	0	-	Unchangea ble
H6-09	0x8609	Information of the third latest fault 2	0 to 65535	0	-	Unchangea ble
H6-10	0x860A	Self diagnosis information 1	0 to 65535	0	-	Unchangea ble
H6-11	0x860B	Self diagnosis information 2	0 to 65535	0	-	Unchangea ble
H6-12	0x860C	Self diagnosis information 3	0 to 65535	0	-	Unchangea ble
H6-13	0x860D	Self diagnosis information 4	0 to 65535	0	-	Unchangea ble
H6-14	0x860E	Code of the third latest fault 3	0 to 65535	0	-	Unchangea ble
H6-15	0x860F	Subcode of the third latest fault 3	0 to 65535	0	-	Unchangea ble
H6-16	0x8610	Information of the third latest fault 3	0 to 65535	0	-	Unchangea ble
H6-17	0x8611	Self diagnosis information 1	0 to 65535	0	-	Unchangea ble
H6-18	0x8612	Self diagnosis information 2	0 to 65535	0	-	Unchangea ble
H6-19	0x8613	Self diagnosis information 3	0 to 65535	0	-	Unchangea ble
H6-20	0x8614	Self diagnosis information 4	0 to 65535	0	-	Unchangea ble
H6-21	0x8615	Code of the third latest fault 4	0 to 65535	0	-	Unchangea ble
H6-22	0x8616	Subcode of the third latest fault 4	0 to 65535	0	-	Unchangea ble
H6-23	0x8617	Information of the third latest fault 4	0 to 65535	0	-	Unchangea ble
H6-24	0x8618	Self diagnosis information 1	0 to 65535	0	-	Unchangea ble
H6-25	0x8619	Self diagnosis information 2	0 to 65535	0	-	Unchangea ble
H6-26	0x861A	Self diagnosis information 3	0 to 65535	0	-	Unchangea ble
H6-27	0x861B	Self diagnosis information 4	0 to 65535	0	-	Unchangea ble
H6-28	0x861C	Code of the third latest fault 5	0 to 65535	0	-	Unchangea ble
H6-29	0x861D	Subcode of the third latest fault 5	0 to 65535	0	-	Unchangea ble

Para.	Comm. Addr.	Name	Reference	De fault	Unit	Change
H6-30	0x861E	Information of the third latest fault 5	0 to 65535	0	-	Unchangea ble
H6-31	0x861F	Self diagnosis information 1	0 to 65535	0	-	Unchangea ble
H6-32	0x8620	Self diagnosis information 2	0 to 65535	0	-	Unchangea ble
H6-33	0x8621	Self diagnosis information 3	0 to 65535	0	-	Unchangea ble
H6-34	0x8622	Self diagnosis information 4	0 to 65535	0	-	Unchangea ble
H6-35	0x8623	Code of the third latest fault 6	0 to 65535	0	-	Unchangea ble
H6-36	0x8624	Subcode of the third latest fault 6	0 to 65535	0	-	Unchangea ble
H6-37	0x8625	Information of the third latest fault 6	0 to 65535	0	-	Unchangea ble
H6-38	0x8626	Self diagnosis information 1	0 to 65535	0	-	Unchangea ble
H6-39	0x8627	Self diagnosis information 2	0 to 65535	0	-	Unchangea ble
H6-40	0x8628	Self diagnosis information 3	0 to 65535	0	-	Unchangea ble
H6-41	0x8629	Self diagnosis information 4	0 to 65535	0	-	Unchangea ble
H6-42	0x862A	Frequency upon the third latest fault	0.00 Hz to 655.35 Hz	0.00	Hz	Unchangea ble
H6-43	0x862B	Current upon the third latest fault	0.00 A to 655.35 A	0.00	A	Unchangea ble
H6-44	0x862C	Bus voltage upon the third latest fault	0.0 V to 6553.5 V	0.0	V	Unchangea ble
H6-45	0x862D	Input terminal state upon the third latest fault	0x0 to 0xFFFF	0x0	-	Unchangea ble
H6-46	0x862E	Output terminal state upon the third latest fault	0x0 to 0xFFFF	0x0	-	Unchangea ble
H6-47	0x862F	AC drive state upon the third latest fault	0 to 65535	0	-	Unchangea ble
H6-48	0x8630	Power-on duration upon the third latest fault	0 min to 65535 min	0	min	Unchangea ble
H6-49	0x8631	Running duration upon the third latest fault	0.0 min to 6553.5 min	0.0	min	Unchangea ble
H6-50	0x8632	Status word A upon the third latest fault	0x0 to 0xFFFF	0x0	-	Unchangea ble

Para.	Comm. Addr.	Name	Reference	De fault	Unit	Change
H6-51	0x8633	Status word B upon the third latest fault	0x0 to 0xFFFF	0x0	-	Unchangea ble
H6-52	0x8634	Command word upon the third latest fault	0x0 to 0xFFFF	0x0	-	Unchangea ble
H7-00	0x8700	Code of the fourth latest fault 1	0 to 65535	0	-	Unchangea ble
H7-01	0x8701	Subcode of the fourth latest fault 1	0 to 65535	0	-	Unchangea ble
H7-02	0x8702	Information of the fourth latest fault 1	0 to 65535	0	-	Unchangea ble
H7-03	0x8703	Self diagnosis information 1	0 to 65535	0	-	Unchangea ble
H7-04	0x8704	Self diagnosis information 2	0 to 65535	0	-	Unchangea ble
H7-05	0x8705	Self diagnosis information 3	0 to 65535	0	-	Unchangea ble
H7-06	0x8706	Self diagnosis information 4	0 to 65535	0	-	Unchangea ble
H7-07	0x8707	Code of the fourth latest fault 2	0 to 65535	0	-	Unchangea ble
H7-08	0x8708	Subcode of the fourth latest fault 2	0 to 65535	0	-	Unchangea ble
H7-09	0x8709	Information of the fourth latest fault 2	0 to 65535	0	-	Unchangea ble
H7-10	0x870A	Self diagnosis information 1	0 to 65535	0	-	Unchangea ble
H7-11	0x870B	Self diagnosis information 2	0 to 65535	0	-	Unchangea ble
H7-12	0x870C	Self diagnosis information 3	0 to 65535	0	-	Unchangea ble
H7-13	0x870D	Self diagnosis information 4	0 to 65535	0	-	Unchangea ble
H7-14	0x870E	Code of the third latest fault 3	0 to 65535	0	-	Unchangea ble
H7-15	0x870F	Subcode of the third latest fault 3	0 to 65535	0	-	Unchangea ble
H7-16	0x8710	Information of the third latest fault 3	0 to 65535	0	-	Unchangea ble
H7-17	0x8711	Self diagnosis information 1	0 to 65535	0	-	Unchangea ble
H7-18	0x8712	Self diagnosis information 2	0 to 65535	0	-	Unchangea ble
H7-19	0x8713	Self diagnosis information 3	0 to 65535	0	-	Unchangea ble
H7-20	0x8714	Self diagnosis information 4	0 to 65535	0	-	Unchangea ble

Para.	Comm. Addr.	Name	Reference	De fault	Unit	Change
H7-21	0x8715	Code of the fourth latest fault 4	0 to 65535	0	-	Unchangea ble
H7-22	0x8716	Subcode of the fourth latest fault 4	0 to 65535	0	-	Unchangea ble
H7-23	0x8717	Information of the fourth latest fault 4	0 to 65535	0	-	Unchangea ble
H7-24	0x8718	Self diagnosis information 1	0 to 65535	0	-	Unchangea ble
H7-25	0x8719	Self diagnosis information 2	0 to 65535	0	-	Unchangea ble
H7-26	0x871A	Self diagnosis information 3	0 to 65535	0	-	Unchangea ble
H7-27	0x871B	Self diagnosis information 4	0 to 65535	0	-	Unchangea ble
H7-28	0x871C	Code of the fourth latest fault 5	0 to 65535	0	-	Unchangea ble
H7-29	0x871D	Subcode of the fourth latest fault 5	0 to 65535	0	-	Unchangea ble
H7-30	0x871E	Information of the fourth latest fault 5	0 to 65535	0	-	Unchangea ble
H7-31	0x871F	Self diagnosis information 1	0 to 65535	0	-	Unchangea ble
H7-32	0x8720	Self diagnosis information 2	0 to 65535	0	-	Unchangea ble
H7-33	0x8721	Self diagnosis information 3	0 to 65535	0	-	Unchangea ble
H7-34	0x8722	Self diagnosis information 4	0 to 65535	0	-	Unchangea ble
H7-35	0x8723	Code of the fourth latest fault 6	0 to 65535	0	-	Unchangea ble
H7-36	0x8724	Subcode of the fourth latest fault 6	0 to 65535	0	-	Unchangea ble
H7-37	0x8725	Information of the fourth latest fault 6	0 to 65535	0	-	Unchangea ble
H7-38	0x8726	Self diagnosis information 1	0 to 65535	0	-	Unchangea ble
H7-39	0x8727	Self diagnosis information 2	0 to 65535	0	-	Unchangea ble
H7-40	0x8728	Self diagnosis information 3	0 to 65535	0	-	Unchangea ble
H7-41	0x8729	Self diagnosis information 4	0 to 65535	0	-	Unchangea ble
H7-42	0x872A	Frequency upon the fourth latest fault	0.00 Hz to 655.35 Hz	0.00	Hz	Unchangea ble
H7-43	0x872B	Current upon the fourth latest fault	0.00 A to 655.35 A	0.00	A	Unchangea ble

Para.	Comm. Addr.	Name	Reference	De fault	Unit	Change
H7-44	0x872C	Bus voltage upon the fourth latest fault	0.0 V to 6553.5 V	0.0	V	Unchangea ble
H7-45	0x872D	Input terminal state upon the fourth latest fault	0x0 to 0xFFFF	0x0	-	Unchangea ble
H7-46	0x872E	Output terminal state upon the fourth latest fault	0x0 to 0xFFFF	0x0	-	Unchangea ble
H7-47	0x872F	AC drive state upon the fourth latest fault	0 to 65535	0	-	Unchangea ble
H7-48	0x8730	Power-on duration upon the fourth latest fault	0 min to 65535 min	0	min	Unchangea ble
H7-49	0x8731	Running duration upon the fourth latest fault	0.0 min to 6553.5 min	0.0	min	Unchangea ble
H7-50	0x8732	Status word A upon the fourth latest fault	0x0 to 0xFFFF	0x0	-	Unchangea ble
H7-51	0x8733	Status word B upon the fourth latest fault	0x0 to 0xFFFF	0x0	-	Unchangea ble
H7-52	0x8734	Command word upon the fourth latest fault	0x0 to 0xFFFF	0x0	-	Unchangea ble
H8-00	0x8800	Code of the fifth latest fault 1	0 to 65535	0	-	Unchangea ble
H8-01	0x8801	Subcode of the fifth latest fault 1	0 to 65535	0	-	Unchangea ble
H8-02	0x8802	Information of the fifth latest fault 1	0 to 65535	0	-	Unchangea ble
H8-03	0x8803	Self diagnosis information 1	0 to 65535	0	-	Unchangea ble
H8-04	0x8804	Self diagnosis information 2	0 to 65535	0	-	Unchangea ble
H8-05	0x8805	Self diagnosis information 3	0 to 65535	0	-	Unchangea ble
H8-06	0x8806	Self diagnosis information 4	0 to 65535	0	-	Unchangea ble
H8-07	0x8807	Code of the fifth latest fault 2	0 to 65535	0	-	Unchangea ble
H8-08	0x8808	Subcode of the fifth latest fault 2	0 to 65535	0	-	Unchangea ble
H8-09	0x8809	Information of the fifth latest fault 2	0 to 65535	0	-	Unchangea ble

Para.	Comm. Addr.	Name	Reference	De fault	Unit	Change
H8-10	0x880A	Self diagnosis information 1	0 to 65535	0	-	Unchangea ble
H8-11	0x880B	Self diagnosis information 2	0 to 65535	0	-	Unchangea ble
H8-12	0x880C	Self diagnosis information 3	0 to 65535	0	-	Unchangea ble
H8-13	0x880D	Self diagnosis information 4	0 to 65535	0	-	Unchangea ble
H8-14	0x880E	Code of the fifth latest fault 3	0 to 65535	0	-	Unchangea ble
H8-15	0x880F	Subcode of the fifth latest fault 3	0 to 65535	0	-	Unchangea ble
H8-16	0x8810	Information of the fifth latest fault 3	0 to 65535	0	-	Unchangea ble
H8-17	0x8811	Self diagnosis information 1	0 to 65535	0	-	Unchangea ble
H8-18	0x8812	Self diagnosis information 2	0 to 65535	0	-	Unchangea ble
H8-19	0x8813	Self diagnosis information 3	0 to 65535	0	-	Unchangea ble
H8-20	0x8814	Self diagnosis information 4	0 to 65535	0	-	Unchangea ble
H8-21	0x8815	Code of the fifth latest fault 4	0 to 65535	0	-	Unchangea ble
H8-22	0x8816	Subcode of the fifth latest fault 4	0 to 65535	0	-	Unchangea ble
H8-23	0x8817	Information of the fifth latest fault 4	0 to 65535	0	-	Unchangea ble
H8-24	0x8818	Self diagnosis information 1	0 to 65535	0	-	Unchangea ble
H8-25	0x8819	Self diagnosis information 2	0 to 65535	0	-	Unchangea ble
H8-26	0x881A	Self diagnosis information 3	0 to 65535	0	-	Unchangea ble
H8-27	0x881B	Self diagnosis information 4	0 to 65535	0	-	Unchangea ble
H8-28	0x881C	Code of the fifth latest fault 5	0 to 65535	0	-	Unchangea ble
H8-29	0x881D	Subcode of the fifth latest fault 5	0 to 65535	0	-	Unchangea ble
H8-30	0x881E	Information of the fifth latest fault 5	0 to 65535	0	-	Unchangea ble
H8-31	0x881F	Self diagnosis information 1	0 to 65535	0	-	Unchangea ble
H8-32	0x8820	Self diagnosis information 2	0 to 65535	0	-	Unchangea ble

Para.	Comm. Addr.	Name	Reference	De fault	Unit	Change
H8-33	0x8821	Self diagnosis information 3	0 to 65535	0	-	Unchangea ble
H8-34	0x8822	Self diagnosis information 4	0 to 65535	0	-	Unchangea ble
H8-35	0x8823	Code of the fifth latest fault 6	0 to 65535	0	-	Unchangea ble
H8-36	0x8824	Subcode of the fifth latest fault 6	0 to 65535	0	-	Unchangea ble
H8-37	0x8825	Information of the fifth latest fault 6	0 to 65535	0	-	Unchangea ble
H8-38	0x8826	Self diagnosis information 1	0 to 65535	0	-	Unchangea ble
H8-39	0x8827	Self diagnosis information 2	0 to 65535	0	-	Unchangea ble
H8-40	0x8828	Self diagnosis information 3	0 to 65535	0	-	Unchangea ble
H8-41	0x8829	Self diagnosis information 4	0 to 65535	0	-	Unchangea ble
H8-42	0x882A	Frequency upon the fifth latest fault	0.00 Hz to 655.35 Hz	0.00	Hz	Unchangea ble
H8-43	0x882B	Current upon the fifth latest fault	0.00 A to 655.35 A	0.00	A	Unchangea ble
H8-44	0x882C	Bus voltage upon the fifth latest fault	0.0 V to 6553.5 V	0.0	V	Unchangea ble
H8-45	0x882D	Input terminal state upon the fifth latest fault	0x0 to 0xFFFF	0x0	-	Unchangea ble
H8-46	0x882E	Output terminal state upon the fifth latest fault	0x0 to 0xFFFF	0x0	-	Unchangea ble
H8-47	0x882F	AC drive state upon the fifth latest fault	0 to 65535	0	-	Unchangea ble
H8-48	0x8830	Power-on duration upon the fifth latest fault	0 min to 65535 min	0	min	Unchangea ble
H8-49	0x8831	Running duration upon the fifth latest fault	0.0 min to 6553.5 min	0.0	min	Unchangea ble
H8-50	0x8832	Status word A upon the fifth latest fault	0x0 to 0xFFFF	0x0	-	Unchangea ble
H8-51	0x8833	Status word B upon the fifth latest fault	0x0 to 0xFFFF	0x0	-	Unchangea ble
H8-52	0x8834	Command word upon the fifth latest fault	0x0 to 0xFFFF	0x0	-	Unchangea ble
U0-00	0x7000	Running frequency	0.00 Hz to 500.00 Hz	0.00	Hz	Unchangea ble

Para.	Comm. Addr.	Name	Reference	De fault	Unit	Change
U0-01	0x7001	Frequency reference	0.00 Hz to 500.00 Hz	0.00	Hz	Unchangea ble
U0-02	0x7002	Bus voltage	0.0 V to 6553.5 V	0.0	V	Unchangea ble
U0-03	0x7003	Output voltage	0 V to 65535 V	0	V	Unchangea ble
U0-04	0x7004	Output current	0.00 A to 655.35 A	0.00	A	Unchangea ble
U0-05	0x7005	Output power	–3276.8 kW to +3276.7 kW	0.0	kW	Unchangea ble
U0-06	0x7006	Output torque	–3276.8% to +3276.7%	0.0	%	Unchangea ble
U0-07	0x7007	DI state	0x0 to 0x7FFF	0x0	-	Unchangea ble
U0-08	0x7008	DO state	0x0 to 0x7FFF	0x0	-	Unchangea ble
U0-09	0x7009	AI1 voltage	–10.57 V to +10.57 V	0.00	V	Unchangea ble
U0-10	0x700A	AI2 voltage	–10.57 V to +10.57 V	0.00	V	Unchangea ble
U0-11	0x700B	AI3 voltage	–10.57 V to +10.57 V	0.00	V	Unchangea ble
U0-12	0x700C	Count value	0 to 65535	0	-	Unchangea ble
U0-13	0x700D	Length value	0 to 65535	0	-	Unchangea ble
U0-14	0x700E	Load speed	0 RPM to 65535 RPM	0	RPM	Unchangea ble
U0-15	0x700F	PID reference	0 to 65535	0	-	Unchangea ble
U0-16	0x7010	PID feedback	0 to 65535	0	-	Unchangea ble
U0-17	0x7011	PLC stage	0 to 65535	0	-	Unchangea ble
U0-18	0x7012	Pulse input frequency	0.00 kHz to 100.00 kHz	0.00	kHz	Unchangea ble
U0-19	0x7013	Feedback speed	–500 Hz to +500.00 Hz	0.00	Hz	Unchangea ble
U0-20	0x7014	Remaining running duration	0.0 min to 65535.0 min	0.0	min	Unchangea ble
U0-21	0x7015	AI1 voltage before correction	–10.57 V to +10.570 V	0.000	V	Unchangea ble
U0-22	0x7016	AI2 voltage before correction	–10.57 V to +10.570 V	0.000	V	Unchangea ble
U0-23	0x7017	AI3 voltage before correction	–10.57 V to +10.570 V	0.000	V	Unchangea ble

Para.	Comm. Addr.	Name	Reference	De fault	Unit	Change
U0-24	0x7018	Motor speed	0 RPM to 65535 RPM	0	RPM	Unchangea ble
U0-25	0x7019	Current power-on duration	0 min to 65535 min	0	min	Unchangea ble
U0-26	0x701A	Current running duration	0.0 min to 6553.5 min	0.0	min	Unchangea ble
U0-27	0x701B	Pulse input frequency	0 Hz to 65535 Hz	0	Hz	Unchangea ble
U0-28	0x701C	Communication reference	–100% to +100.00%	0.00	%	Unchangea ble
U0-29	0x701D	Encoder feedback speed	–500 Hz to +500.00 Hz	0.00	Hz	Unchangea ble
U0-30	0x701E	Main frequency X	–500 Hz to +500.00 Hz	0.00	Hz	Unchangea ble
U0-31	0x701F	Auxiliary frequency Y	–500 Hz to +500.00 Hz	0.00	Hz	Unchangea ble
U0-32	0x7020	Any memory address	0 to 65535	0	-	Unchangea ble
U0-33	0x7021	Synchronous motor rotor position	0.0° to 6553.5°	0.0	°	Unchangea ble
U0-34	0x7022	AI3 temperature mode - motor temperature	0°C to 200°C	0	°C	Unchangea ble
U0-35	0x7023	Target torque	–200% to +200.0%	0.0	%	Unchangea ble
U0-36	0x7024	Resolver position	0 to 65535	0	-	Unchangea ble
U0-37	0x7025	Power factor angle	0.0° to 6553.5°	0.0	°	Unchangea ble
U0-38	0x7026	ABZ position	0 to 65535	0	-	Unchangea ble
U0-39	0x7027	Target voltage upon V/f separation	0 V to 65535 V	0	V	Unchangea ble
U0-40	0x7028	Output voltage upon V/f separation	0 V to 65535 V	0	V	Unchangea ble
U0-45	0x702D	Fault subcode	0 to 65535	0	-	Unchangea ble
U0-46	0x702E	Limit code	0.0 to 6553.5	0.0	-	Unchangea ble
U0-50	0x7032	0.5 ms A hold-up time	0.0 ms to 6553.5 ms	0.0	ms	Unchangea ble
U0-51	0x7033	0.5 ms B hold-up time	0.0 ms to 6553.5 ms	0.0	ms	Unchangea ble
U0-52	0x7034	0.5 ms C hold-up time	0.0 ms to 6553.5 ms	0.0	ms	Unchangea ble

Para.	Comm. Addr.	Name	Reference	De fault	Unit	Change
U0-53	0x7035	0.5 ms D hold-up time	0.0 ms to 6553.5 ms	0.0	ms	Unchangeable
U0-54	0x7036	0.5 ms A execution time	0.0 ms to 6553.5 ms	0.0	ms	Unchangeable
U0-55	0x7037	0.5 ms B execution time	0.0 ms to 6553.5 ms	0.0	ms	Unchangeable
U0-56	0x7038	0.5 ms C execution time	0.0 ms to 6553.5 ms	0.0	ms	Unchangeable
U0-57	0x7039	0.5 ms D execution time	0.0 ms to 6553.5 ms	0.0	ms	Unchangeable
U0-58	0x703A	Motor running revolution count	0 to 65535	0	-	Unchangeable
U0-59	0x703B	Frequency reference	–100% to +100.00%	0.00	%	Unchangeable
U0-60	0x703C	Running frequency	–100% to +100.00%	0.00	%	Unchangeable
U0-61	0x703D	AC drive state	0 to 65535	0	-	Unchangeable
U0-62	0x703E	Code of active fault	0 to 65535	0	-	Unchangeable
U0-63	0x703F	Torque sent in point-to-point communication	0.00% to 6553.50%	0.00	%	Unchangeable
U0-64	0x7040	Number of slaves in master-slave control	0 to 65535	0	-	Unchangeable
U0-65	0x7041	Torque upper limit	–2000% to +2000.0%	0.0	%	Unchangeable
U0-66	0x7042	Model of communication expansion card	0 to 65535	0	-	Unchangeable
U0-67	0x7043	Software version of communication expansion card	0 to 65535	0	-	Unchangeable
U0-68	0x7044	AC drive state on PROFIBUS DP card	0 to 65535	0	-	Unchangeable
U0-69	0x7045	Frequency sent to PROFIBUS DP card/ 0.01 Hz	0.00 Hz to 655.35 Hz	0.00	Hz	Unchangeable
U0-70	0x7046	Motor speed sent to PROFIBUS DP card/ RPM	0 RPM to 65535 RPM	0	RPM	Unchangeable
U0-71	0x7047	Communication card-specific current	0.0 A to 6553.5 A	0.0	A	Unchangeable
U0-72	0x7048	Communication card error state	0 to 65535	0	-	Unchangeable

Para.	Comm. Addr.	Name	Reference	De fault	Unit	Change
U0-73	0x7049	Motor SN	0 to 65535	0	-	Unchangea ble
U0-74	0x704A	AC drive output torque	–200% to +200.0%	0.0	%	Unchangea ble
U0-76	0x704C	Low-order bits of accumulative power consumption	0.0 kW·h to 6553.5 kW·h	0.0	kW·h	Unchangea ble
U0-77	0x704D	High-order bits of accumulative power consumption	0 kW·h to 65535 kW·h	0	kW·h	Unchangea ble
U0-78	0x704E	Linear speed	0 m/min to 65535 m/min	0	m/min	Unchangea ble
U0-80	0x7050	EtherCAT slave name	0 to 65535	0	-	Unchangea ble
U0-81	0x7051	EtherCAT slave alias	0 to 65535	0	-	Unchangea ble
U0-82	0x7052	EtherCAT ESM transmission error code	0 to 65535	0	-	Unchangea ble
U0-83	0x7053	EtherCAT XML file version	0 to 65535	0	-	Unchangea ble
U0-84	0x7054	EtherCAT synchronization loss count	0 to 65535	0	-	Unchangea ble
U0-85	0x7055	Maximum errors and invalid frames of EtherCAT port 0 per unit time	0 to 65535	0	-	Unchangea ble
U0-86	0x7056	Maximum errors and invalid frames of EtherCAT port 1 per unit time	0 to 65535	0	-	Unchangea ble
U0-87	0x7057	Maximum forwarding errors of EtherCAT port per unit time	0 to 65535	0	-	Unchangea ble
U0-88	0x7058	Maximum error count of EtherCAT data frame processing unit per unit time	0 to 65535	0	-	Unchangea ble
U0-89	0x7059	Maximum link loss of EtherCAT port per unit time	0 to 65535	0	-	Unchangea ble
U0-90	0x705A	DI function selection display 1	0 to 65535	0	-	Unchangea ble

Para.	Comm. Addr.	Name	Reference	De fault	Unit	Change
U0-91	0x705B	DI function selection display 2	0 to 65535	0	-	Unchangea ble
U0-92	0x705C	DI function selection display 3	0 to 65535	0	-	Unchangea ble
U0-93	0x705D	DI function selection display 4	0 to 65535	0	-	Unchangea ble
U0-94	0x705E	DI function selection display 5	0 to 65535	0	-	Unchangea ble
U0-95	0x705F	STO initialization flag	0 to 65535	0	-	Unchangea ble
U0-96	0x7060	STO status word monitoring	0 to 65535	0	-	Unchangea ble
U0-97	0x7061	STO model	0x0 to 0xFFFF	0x0	-	Unchangea ble
U0-98	0x7062	STO 1.2 V AD sampling value	0 to 65535	0	-	Unchangea ble
U0-99	0x7063	STO 5 V AD sampling value	0 to 65535	0	-	Unchangea ble
U2-00	0x7200	Current motor parameter group	0 to 65535	0	-	Unchangea ble
U2-01	0x7201	Current control channel	0 to 65535	0	-	Unchangea ble
U2-02	0x7202	Current reference channel	0 to 65535	0	-	Unchangea ble
U2-03	0x7203	Skip frequency flag	0 to 65535	0	-	Unchangea ble
U2-04	0x7204	Local or remote	0 to 65535	0	-	Unchangea ble
U2-05	0x7205	Current multi-speed reference	0 to 65535	0	-	Unchangea ble
U2-06	0x7206	Current multi-speed reference effective value	0 to 65535	0	-	Unchangea ble
U2-07	0x7207	Key value	0 to 65535	0	-	Unchangea ble
U2-08	0x7208	Power-off time	0 to 65535	0	-	Unchangea ble
U2-09	0x7209	16-bit parameter error index menu address	0x0 to 0xFFFF	0x0	-	Unchangea ble
U2-10	0x720A	16-bit parameter error type	0 to 65535	0	-	Unchangea ble
U2-11	0x720B	32-bit parameter error internal index address	0 to 65535	0	-	Unchangea ble

Para.	Comm. Addr.	Name	Reference	De fault	Unit	Change
U2-12	0x720C	32-bit parameter error internal index address	0 to 65535	0	-	Unchangea ble
U2-13	0x720D	Fault and limit severity	0 to 65535	0	-	Unchangea ble
U2-14	0x720E	Fault auto reset and restart steps	0 to 65535	0	-	Unchangea ble
U2-23	0x7217	Parameter backup exception	0 to 65535	0	-	Unchangea ble
U2-24	0x7218	Macro parameter backup and restoration exception	0 to 65535	0	-	Unchangea ble
U2-25	0x7219	Remaining running duration during timed running	0.0 min to 6553.5 min	0.0	min	Unchangea ble
U2-26	0x721A	Parameter record information 0	0 to 65535	0	-	Unchangea ble
U2-27	0x721B	Parameter record information 1	0 to 65535	0	-	Unchangea ble
U2-28	0x721C	Parameter record information 2	0 to 65535	0	-	Unchangea ble
U2-29	0x721D	Parameter record information 3	0 to 65535	0	-	Unchangea ble
U2-30	0x721E	Parameter record information 4	0 to 65535	0	-	Unchangea ble
U2-31	0x721F	Parameter record information 5	0 to 65535	0	-	Unchangea ble
U2-32	0x7220	Parameter record information 6	0 to 65535	0	-	Unchangea ble
U2-33	0x7221	Parameter record information 7	0 to 65535	0	-	Unchangea ble
U2-34	0x7222	Parameter record information 8	0 to 65535	0	-	Unchangea ble
U2-35	0x7223	Parameter record information 9	0 to 65535	0	-	Unchangea ble
U2-36	0x7224	Parameter record information 10	0 to 65535	0	-	Unchangea ble
U2-37	0x7225	Parameter record information 11	0 to 65535	0	-	Unchangea ble
U2-38	0x7226	Parameter record information 12	0 to 65535	0	-	Unchangea ble
U2-39	0x7227	Parameter record information 13	0 to 65535	0	-	Unchangea ble
U2-40	0x7228	Parameter record information 14	0 to 65535	0	-	Unchangea ble

Para.	Comm. Addr.	Name	Reference	De fault	Unit	Change
U2-41	0x7229	Parameter record information 15	0 to 65535	0	-	Unchangea ble
U2-42	0x722A	Parameter record information 16	0 to 65535	0	-	Unchangea ble
U2-43	0x722B	Parameter record information 17	0 to 65535	0	-	Unchangea ble
U2-44	0x722C	Parameter record information 18	0 to 65535	0	-	Unchangea ble
U2-45	0x722D	Parameter record information 19	0 to 65535	0	-	Unchangea ble
U2-46	0x722E	Parameter record information 20	0 to 65535	0	-	Unchangea ble
U2-47	0x722F	Parameter record information 21	0 to 65535	0	-	Unchangea ble
U2-48	0x7230	Parameter record information 22	0 to 65535	0	-	Unchangea ble
U2-49	0x7231	Parameter record information 23	0 to 65535	0	-	Unchangea ble
U2-50	0x7232	Parameter record information 24	0 to 65535	0	-	Unchangea ble
U2-51	0x7233	Parameter record information 25	0 to 65535	0	-	Unchangea ble
U2-52	0x7234	Parameter record information 26	0 to 65535	0	-	Unchangea ble
U2-60	0x723C	Address mapping enable state	0 to 65535	0	-	Unchangea ble
U2-61	0x723D	Expansion card communication fault state	0 to 65535	0	-	Unchangea ble
U2-62	0x723E	Communication fault reset command	0 to 65535	0	-	Unchangea ble
U2-63	0x723F	Communication warning flag	0 to 65535	0	-	Unchangea ble
U2-64	0x7240	16-bit parameter error internal index address	0 to 65535	0	-	Unchangea ble
U2-65	0x7241	Power-on initialization completion flag	0 to 65535	0	-	Unchangea ble
U2-66	0x7242	Model-related parameter update flag	0 to 65535	0	-	Unchangea ble
U3-12	0x730C	Master state	0 to 65535	0	-	Unchangea ble

Para.	Comm. Addr.	Name	Reference	Default	Unit	Change
U3-13	0x730D	Master frequency	0 to 65535	0	-	Unchangeable
U3-14	0x730E	Master torque	0 to 65535	0	-	Unchangeable
U3-15	0x730F	Master phase sequence	0 to 65535	0	-	Unchangeable
U3-16	0x7310	Communication frequency reference	0.00 Hz to 655.35 Hz	0.00	Hz	Unchangeable
U3-17	0x7311	Communication reference control word	0 to 65535	0	-	Unchangeable
U3-18	0x7312	DO state (terminal function defined by parameters in group F5: communication control)	0 to 65535	0	-	Unchangeable
U3-19	0x7313	AO1 output reference (terminal function defined by parameters in group F5: communication control)	0% to 65535%	0	%	Unchangeable
U3-20	0x7314	AO2 output reference (terminal function defined by parameters in group F5: communication control)	0% to 65535%	0	%	Unchangeable
U3-21	0x7315	HDO output reference (terminal function defined by parameters in group F5: communication control)	0% to 65535%	0	%	Unchangeable
U3-22	0x7316	Command input through communication	0 to 65535	0	-	Unchangeable
U3-23	0x7317	Speed reference input through communication	0 RPM to 65535 RPM	0	RPM	Unchangeable
U3-24	0x7318	Communication card type	0 to 65535	0	-	Unchangeable

Para.	Comm. Addr.	Name	Reference	De fault	Unit	Change
U3-25	0x7319	Communication card version	0 to 65535	0	-	Unchangea ble
U3-28	0x731C	EtherCAT station alias	0 to 65535	0	-	Changeable at any time
U3-35	0x7323	EtherCAT card information 1	0 to 65535	0	-	Unchangea ble
U3-36	0x7324	EtherCAT card information 2	0 to 65535	0	-	Unchangea ble
U3-37	0x7325	EtherCAT card information 3	0 to 65535	0	-	Unchangea ble
U3-38	0x7326	EtherCAT card information 4	0 to 65535	0	-	Unchangea ble
U3-39	0x7327	EtherCAT card information 5	0 to 65535	0	-	Unchangea ble
U3-40	0x7328	EtherCAT card information 6	0 to 65535	0	-	Unchangea ble
U3-41	0x7329	EtherCAT card information 7	0 to 65535	0	-	Unchangea ble
U3-42	0x732A	EtherCAT card information 8	0 to 65535	0	-	Unchangea ble
U3-43	0x732B	EtherCAT card information 9	0 to 65535	0	-	Unchangea ble
U3-44	0x732C	EtherNet/IP error	0 to 65535	0	-	Unchangea ble
U3-50	0x7332	LED control word	0 to 65535	0	-	Unchangea ble
U3-51	0x7333	Background control word	0 to 65535	0	-	Unchangea ble
U3-52	0x7334	SOP control word	0 to 65535	0	-	Unchangea ble
U3-53	0x7335	Remote call	0 to 65535	0	-	Unchangea ble
U3-54	0x7336	Control word set through communication	0 to 65535	0	-	Unchangea ble
U3-55	0x7337	Target speed set through communication	0.0% to 6553.5%	0.0	%	Unchangea ble
U3-56	0x7338	MD500 compatible status word	0 to 65535	0	-	Unchangea ble
U3-57	0x7339	MD500 compatible LCD command word	0 to 65535	0	-	Unchangea ble
U3-58	0x733A	MD500 compatible IDS command word	0 to 65535	0	-	Unchangea ble

Para.	Comm. Addr.	Name	Reference	De fault	Unit	Change
U3-59	0x733B	MD500 compatible 1000H speed reference	0.00% to 655.35%	0.00	%	Unchangea ble
L0-00	0x9000	DI1 drive sampling state	0 to 65535	0	-	Unchangea ble
L0-01	0x9001	DI2 drive sampling state	0 to 65535	0	-	Unchangea ble
L0-02	0x9002	DI3 drive sampling state	0 to 65535	0	-	Unchangea ble
L0-03	0x9003	DI4 drive sampling state	0 to 65535	0	-	Unchangea ble
L0-04	0x9004	DI5 drive sampling state	0 to 65535	0	-	Unchangea ble
L0-05	0x9005	DI6 drive sampling state	0 to 65535	0	-	Unchangea ble
L0-06	0x9006	DI7 drive sampling state	0 to 65535	0	-	Unchangea ble
L0-07	0x9007	DI8 drive sampling state	0 to 65535	0	-	Unchangea ble
L0-08	0x9008	DI9 drive sampling state	0 to 65535	0	-	Unchangea ble
L0-09	0x9009	DI10 drive sampling state	0 to 65535	0	-	Unchangea ble
L0-10	0x900A	AI1AsDI final output state	0 to 65535	0	-	Unchangea ble
L0-11	0x900B	AI2AsDI final output state	0 to 65535	0	-	Unchangea ble
L0-12	0x900C	AI3AsDI final output state	0 to 65535	0	-	Unchangea ble
L0-13	0x900D	AI1AsDI inversion state	0 to 65535	0	-	Unchangea ble
L0-14	0x900E	AI2AsDI inversion state	0 to 65535	0	-	Unchangea ble
L0-15	0x900F	AI3AsDI inversion state	0 to 65535	0	-	Unchangea ble
L0-16	0x9010	DI1 drive output state	0 to 65535	0	-	Unchangea ble
L0-17	0x9011	DI2 drive output state	0 to 65535	0	-	Unchangea ble
L0-18	0x9012	DI3 drive output state	0 to 65535	0	-	Unchangea ble
L0-19	0x9013	DI4 drive output state	0 to 65535	0	-	Unchangea ble
L0-20	0x9014	DI5 drive output state	0 to 65535	0	-	Unchangea ble
L0-21	0x9015	DI6 drive output state	0 to 65535	0	-	Unchangea ble

Para.	Comm. Addr.	Name	Reference	De fault	Unit	Change
L0-22	0x9016	DI7 drive output state	0 to 65535	0	-	Unchangea ble
L0-23	0x9017	DI8 drive output state	0 to 65535	0	-	Unchangea ble
L0-24	0x9018	DI9 drive output state	0 to 65535	0	-	Unchangea ble
L0-25	0x9019	DI10 drive output state	0 to 65535	0	-	Unchangea ble
L0-26	0x901A	VDI1 drive output state	0 to 65535	0	-	Unchangea ble
L0-27	0x901B	VDI2 drive output state	0 to 65535	0	-	Unchangea ble
L0-28	0x901C	VDI3 drive output state	0 to 65535	0	-	Unchangea ble
L0-29	0x901D	VDI4 drive output state	0 to 65535	0	-	Unchangea ble
L0-30	0x901E	VDI5 drive output state	0 to 65535	0	-	Unchangea ble
L0-31	0x901F	VDI6 drive output state	0 to 65535	0	-	Unchangea ble
L0-32	0x9020	DI1 final output state	0 to 65535	0	-	Unchangea ble
L0-33	0x9021	DI2 final output state	0 to 65535	0	-	Unchangea ble
L0-34	0x9022	DI3 final output state	0 to 65535	0	-	Unchangea ble
L0-35	0x9023	DI4 final output state	0 to 65535	0	-	Unchangea ble
L0-36	0x9024	DI5 final output state	0 to 65535	0	-	Unchangea ble
L0-37	0x9025	DI6 final output state	0 to 65535	0	-	Unchangea ble
L0-38	0x9026	DI7 final output state	0 to 65535	0	-	Unchangea ble
L0-39	0x9027	DI8 final output state	0 to 65535	0	-	Unchangea ble
L0-40	0x9028	DI9 final output state	0 to 65535	0	-	Unchangea ble
L0-41	0x9029	DI10 final output state	0 to 65535	0	-	Unchangea ble
L0-42	0x902A	VDI1 final output state	0 to 65535	0	-	Unchangea ble
L0-43	0x902B	VDI2 final output state	0 to 65535	0	-	Unchangea ble
L0-44	0x902C	VDI3 final output state	0 to 65535	0	-	Unchangea ble

Para.	Comm. Addr.	Name	Reference	De fault	Unit	Change
L0-45	0x902D	VDI4 final output state	0 to 65535	0	-	Unchangea ble
L0-46	0x902E	VDI5 final output state	0 to 65535	0	-	Unchangea ble
L0-47	0x902F	VDI6 final output state	0 to 65535	0	-	Unchangea ble
L0-48	0x9030	DI1 inversion state	0 to 65535	0	-	Unchangea ble
L0-49	0x9031	DI2 inversion state	0 to 65535	0	-	Unchangea ble
L0-50	0x9032	DI3 inversion state	0 to 65535	0	-	Unchangea ble
L0-51	0x9033	DI4 inversion state	0 to 65535	0	-	Unchangea ble
L0-52	0x9034	DI5 inversion state	0 to 65535	0	-	Unchangea ble
L0-53	0x9035	DI6 inversion state	0 to 65535	0	-	Unchangea ble
L0-54	0x9036	DI7 inversion state	0 to 65535	0	-	Unchangea ble
L0-55	0x9037	DI8 inversion state	0 to 65535	0	-	Unchangea ble
L0-56	0x9038	DI9 inversion state	0 to 65535	0	-	Unchangea ble
L0-57	0x9039	DI10 inversion state	0 to 65535	0	-	Unchangea ble
L0-58	0x903A	VDI1 inversion state	0 to 65535	0	-	Unchangea ble
L0-59	0x903B	VDI2 inversion state	0 to 65535	0	-	Unchangea ble
L0-60	0x903C	VDI3 inversion state	0 to 65535	0	-	Unchangea ble
L0-61	0x903D	VDI4 inversion state	0 to 65535	0	-	Unchangea ble
L0-62	0x903E	VDI5 inversion state	0 to 65535	0	-	Unchangea ble
L0-63	0x903F	VDI6 inversion state	0 to 65535	0	-	Unchangea ble
L0-64	0x9040	Relay 1 (DO3) state before filtering	0 to 65535	0	-	Unchangea ble
L0-65	0x9041	FMR state before filtering	0 to 65535	0	-	Unchangea ble
L0-66	0x9042	DO1 state before filtering	0 to 65535	0	-	Unchangea ble
L0-67	0x9043	Relay 2 (DO4) state before filtering	0 to 65535	0	-	Unchangea ble

Para.	Comm. Addr.	Name	Reference	De fault	Unit	Change
L0-68	0x9044	DO2 state before filtering	0 to 65535	0	-	Unchangea ble
L0-69	0x9045	VDO1 state before filtering	0 to 65535	0	-	Unchangea ble
L0-70	0x9046	VDO2 state before filtering	0 to 65535	0	-	Unchangea ble
L0-71	0x9047	VDO3 state before filtering	0 to 65535	0	-	Unchangea ble
L0-72	0x9048	VDO4 state before filtering	0 to 65535	0	-	Unchangea ble
L0-73	0x9049	VDO5 state before filtering	0 to 65535	0	-	Unchangea ble
L0-74	0x904A	VDO6 state before filtering	0 to 65535	0	-	Unchangea ble
L0-75	0x904B	VDO7 state before filtering	0 to 65535	0	-	Unchangea ble
L0-76	0x904C	VDO8 state before filtering	0 to 65535	0	-	Unchangea ble
L0-77	0x904D	VDO9 state before filtering	0 to 65535	0	-	Unchangea ble
L0-78	0x904E	VDO10 state before filtering	0 to 65535	0	-	Unchangea ble
L0-79	0x904F	VDO11 state before filtering	0 to 65535	0	-	Unchangea ble
L0-80	0x9050	Relay 1 (DO3) final output state	0 to 65535	0	-	Unchangea ble
L0-81	0x9051	FMR final output state	0 to 65535	0	-	Unchangea ble
L0-82	0x9052	DO1 final output state	0 to 65535	0	-	Unchangea ble
L0-83	0x9053	Relay 2 (DO4) final output state	0 to 65535	0	-	Unchangea ble
L0-84	0x9054	DO2 final output state	0 to 65535	0	-	Unchangea ble
L0-85	0x9055	VDO1 final output state	0 to 65535	0	-	Unchangea ble
L0-86	0x9056	VDO2 final output state	0 to 65535	0	-	Unchangea ble
L0-87	0x9057	VDO3 final output state	0 to 65535	0	-	Unchangea ble
L0-88	0x9058	VDO4 final output state	0 to 65535	0	-	Unchangea ble
L0-89	0x9059	VDO5 final output state	0 to 65535	0	-	Unchangea ble

Para.	Comm. Addr.	Name	Reference	De fault	Unit	Change
L0-90	0x905A	VDO6 final output state	0 to 65535	0	-	Unchangea ble
L0-91	0x905B	VDO7 final output state	0 to 65535	0	-	Unchangea ble
L0-92	0x905C	VDO8 final output state	0 to 65535	0	-	Unchangea ble
L0-93	0x905D	VDO9 final output state	0 to 65535	0	-	Unchangea ble
L0-94	0x905E	VDO10 final output state	0 to 65535	0	-	Unchangea ble
L0-95	0x905F	VDO11 final output state	0 to 65535	0	-	Unchangea ble
L0-96	0x9060	AI1 input overlimit	0 to 65535	0	-	Unchangea ble
L0-97	0x9061	AI2 input overlimit	0 to 65535	0	-	Unchangea ble
L0-98	0x9062	AI3 input overlimit	0 to 65535	0	-	Unchangea ble
L0-99	0x9063	HDI input wire breakage	0 to 65535	0	-	Unchangea ble
L1-00	0x9100	Reference count value reach	0 to 65535	0	-	Unchangea ble
L1-01	0x9101	Designated count value reach	0 to 65535	0	-	Unchangea ble
L1-02	0x9102	Length comparison value reach	0 to 65535	0	-	Unchangea ble
L1-03	0x9103	Comparison result of DIO edge counting module 1	0 to 65535	0	-	Unchangea ble
L1-04	0x9104	Comparison result of DIO edge counting module 2	0 to 65535	0	-	Unchangea ble
L1-05	0x9105	Comparison result of DIO edge counting module 3	0 to 65535	0	-	Unchangea ble
L1-06	0x9106	Comparison result of DIO edge counting module 4	0 to 65535	0	-	Unchangea ble
L1-07	0x9107	AI2 or AI3 temperature mode - motor temperature reach	0 to 65535	0	-	Unchangea ble
L1-08	0x9108	AI2 or AI3 temperature mode - motor overtemperature	0 to 65535	0	-	Unchangea ble

Para.	Comm. Addr.	Name	Reference	De fault	Unit	Change
L1-09	0x9109	AI2 temperature mode - motor overtemperature	0 to 65535	0	-	Unchangea ble
L1-10	0x910A	AI3 temperature mode - motor overtemperature	0 to 65535	0	-	Unchangea ble
L1-11	0x910B	IGBT temperature reach (flag)	0 to 65535	0	-	Unchangea ble
L1-12	0x910C	Ready to switch on	0 to 65535	0	-	Unchangea ble
L1-13	0x910D	Ready to run	0 to 65535	0	-	Unchangea ble
L1-14	0x910E	Running	0 to 65535	0	-	Unchangea ble
L1-15	0x910F	Faulty	0: Not faulty 1: Faulty	0	-	Unchangea ble
L1-16	0x9110	OFF2 inactive	0: Active (OFF2 = 0) 1: Inactive (OFF2 = 1)	0	-	Unchangea ble
L1-17	0x9111	OFF3 inactive	0: Active (OFF3 = 0) 1: Inactive (OFF3 = 1)	0	-	Unchangea ble
L1-18	0x9112	Switch-on blocking	0 to 65535	0	-	Unchangea ble
L1-19	0x9113	Alarm/Limit activation	0 to 65535	0	-	Unchangea ble
L1-20	0x9114	Actual speed following speed reference	0 to 65535	0	-	Unchangea ble
L1-21	0x9115	Local or remote	0: Local 1: Remote	0	-	Unchangea ble
L1-22	0x9116	Target speed reach	0 to 65535	0	-	Unchangea ble
L1-23	0x9117	Torque limit reach	0 to 65535	0	-	Unchangea ble
L1-24	0x9118	Forward speed	0 to 65535	0	-	Unchangea ble
L1-25	0x9119	Reverse speed	0 to 65535	0	-	Unchangea ble
L1-26	0x911A	Motor running flag	0: Stopped 1: Running (pulse output)	0	-	Unchangea ble
L1-27	0x911B	User setting 0	0 to 65535	0	-	Unchangea ble
L1-28	0x911C	Self-check	0 to 65535	0	-	Unchangea ble
L1-29	0x911D	Auto-tuning	0 to 65535	0	-	Unchangea ble

Para.	Comm. Addr.	Name	Reference	De fault	Unit	Change
L1-30	0x911E	Limit (running with limits) activation	0 to 65535	0	-	Unchangea ble
L1-31	0x911F	Alarm activation	0 to 65535	0	-	Unchangea ble
L1-32	0x9120	Speed mode	0 to 65535	0	-	Unchangea ble
L1-33	0x9121	Torque mode	0 to 65535	0	-	Unchangea ble
L1-34	0x9122	Position mode	0 to 65535	0	-	Unchangea ble
L1-35	0x9123	RFG enable	0 to 65535	0	-	Unchangea ble
L1-36	0x9124	RFG running	0 to 65535	0	-	Unchangea ble
L1-37	0x9125	Stop upon fault	0 to 65535	0	-	Unchangea ble
L1-38	0x9126	Normal running	0 to 65535	0	-	Unchangea ble
L1-39	0x9127	Jogging	0 to 65535	0	-	Unchangea ble
L1-42	0x912A	Terminal control flag	0 to 65535	0	-	Unchangea ble
L1-43	0x912B	User setting 1	0 to 65535	0	-	Unchangea ble
L1-44	0x912C	Control channel	0: Control channel 1 1: Control channel 2	0	-	Unchangea ble
L1-45	0x912D	Reference channel	0: Reference channel 1 1: Reference channel 2	0	-	Unchangea ble
L1-60	0x913C	Excessive speed deviation	0 to 65535	0	-	Unchangea ble
L1-61	0x913D	Overspeed	0 to 65535	0	-	Unchangea ble
L1-62	0x913E	Target speed reach	0 to 65535	0	-	Unchangea ble
L1-63	0x913F	Speed comparison reach 0	0 to 65535	0	-	Unchangea ble
L1-64	0x9140	Speed comparison reach 1	0 to 65535	0	-	Unchangea ble
L1-65	0x9141	Motor speed positive	0 to 65535	0	-	Unchangea ble
L1-66	0x9142	Motor speed negative	0 to 65535	0	-	Unchangea ble
L1-76	0x914C	Bit0 of W2B module A	0 to 65535	0	-	Unchangea ble
L1-77	0x914D	Bit1 of W2B module A	0 to 65535	0	-	Unchangea ble

Para.	Comm. Addr.	Name	Reference	De fault	Unit	Change
L1-78	0x914E	Bit2 of W2B module A	0 to 65535	0	-	Unchangeable
L1-79	0x914F	Bit3 of W2B module A	0 to 65535	0	-	Unchangeable
L1-80	0x9150	Bit4 of W2B module A	0 to 65535	0	-	Unchangeable
L1-81	0x9151	Bit5 of W2B module A	0 to 65535	0	-	Unchangeable
L1-82	0x9152	Bit6 of W2B module A	0 to 65535	0	-	Unchangeable
L1-83	0x9153	Bit7 of W2B module A	0 to 65535	0	-	Unchangeable
L1-84	0x9154	Bit8 of W2B module A	0 to 65535	0	-	Unchangeable
L1-85	0x9155	Bit9 of W2B module A	0 to 65535	0	-	Unchangeable
L1-86	0x9156	Bit10 of W2B module A	0 to 65535	0	-	Unchangeable
L1-87	0x9157	Bit11 of W2B module A	0 to 65535	0	-	Unchangeable
L1-88	0x9158	Bit12 of W2B module A	0 to 65535	0	-	Unchangeable
L1-89	0x9159	Bit13 of W2B module A	0 to 65535	0	-	Unchangeable
L1-90	0x915A	Bit14 of W2B module A	0 to 65535	0	-	Unchangeable
L1-91	0x915B	Bit15 of W2B module A	0 to 65535	0	-	Unchangeable
L1-92	0x915C	Bit0 of W2B module B	0 to 65535	0	-	Unchangeable
L1-93	0x915D	Bit1 of W2B module B	0 to 65535	0	-	Unchangeable
L1-94	0x915E	Bit2 of W2B module B	0 to 65535	0	-	Unchangeable
L1-95	0x915F	Bit3 of W2B module B	0 to 65535	0	-	Unchangeable
L1-96	0x9160	Bit4 of W2B module B	0 to 65535	0	-	Unchangeable
L1-97	0x9161	Bit5 of W2B module B	0 to 65535	0	-	Unchangeable
L1-98	0x9162	Bit6 of W2B module B	0 to 65535	0	-	Unchangeable
L1-99	0x9163	Bit7 of W2B module B	0 to 65535	0	-	Unchangeable
L2-00	0x9200	Bit8 of W2B module B	0 to 65535	0	-	Unchangeable

Para.	Comm. Addr.	Name	Reference	De fault	Unit	Change
L2-01	0x9201	Bit9 of W2B module B	0 to 65535	0	-	Unchangea ble
L2-02	0x9202	Bit10 of W2B module B	0 to 65535	0	-	Unchangea ble
L2-03	0x9203	Bit11 of W2B module B	0 to 65535	0	-	Unchangea ble
L2-04	0x9204	Bit12 of W2B module B	0 to 65535	0	-	Unchangea ble
L2-05	0x9205	Bit13 of W2B module B	0 to 65535	0	-	Unchangea ble
L2-06	0x9206	Bit14 of W2B module B	0 to 65535	0	-	Unchangea ble
L2-07	0x9207	Bit15 of W2B module B	0 to 65535	0	-	Unchangea ble
L2-08	0x9208	Bit0 of W2B module C	0 to 65535	0	-	Unchangea ble
L2-09	0x9209	Bit1 of W2B module C	0 to 65535	0	-	Unchangea ble
L2-10	0x920A	Bit2 of W2B module C	0 to 65535	0	-	Unchangea ble
L2-11	0x920B	Bit3 of W2B module C	0 to 65535	0	-	Unchangea ble
L2-12	0x920C	Bit4 of W2B module C	0 to 65535	0	-	Unchangea ble
L2-13	0x920D	Bit5 of W2B module C	0 to 65535	0	-	Unchangea ble
L2-14	0x920E	Bit6 of W2B module C	0 to 65535	0	-	Unchangea ble
L2-15	0x920F	Bit7 of W2B module C	0 to 65535	0	-	Unchangea ble
L2-16	0x9210	Bit8 of W2B module C	0 to 65535	0	-	Unchangea ble
L2-17	0x9211	Bit9 of W2B module C	0 to 65535	0	-	Unchangea ble
L2-18	0x9212	Bit10 of W2B module C	0 to 65535	0	-	Unchangea ble
L2-19	0x9213	Bit11 of W2B module C	0 to 65535	0	-	Unchangea ble
L2-20	0x9214	Bit12 of W2B module C	0 to 65535	0	-	Unchangea ble
L2-21	0x9215	Bit13 of W2B module C	0 to 65535	0	-	Unchangea ble
L2-22	0x9216	Bit14 of W2B module C	0 to 65535	0	-	Unchangea ble
L2-23	0x9217	Bit15 of W2B module C	0 to 65535	0	-	Unchangea ble

Para.	Comm. Addr.	Name	Reference	De fault	Unit	Change
L2-24	0x9218	Bit0 of W2B module D	0 to 65535	0	-	Unchangeable
L2-25	0x9219	Bit1 of W2B module D	0 to 65535	0	-	Unchangeable
L2-26	0x921A	Bit2 of W2B module D	0 to 65535	0	-	Unchangeable
L2-27	0x921B	Bit3 of W2B module D	0 to 65535	0	-	Unchangeable
L2-28	0x921C	Bit4 of W2B module D	0 to 65535	0	-	Unchangeable
L2-29	0x921D	Bit5 of W2B module D	0 to 65535	0	-	Unchangeable
L2-30	0x921E	Bit6 of W2B module D	0 to 65535	0	-	Unchangeable
L2-31	0x921F	Bit7 of W2B module D	0 to 65535	0	-	Unchangeable
L2-32	0x9220	Bit8 of W2B module D	0 to 65535	0	-	Unchangeable
L2-33	0x9221	Bit9 of W2B module D	0 to 65535	0	-	Unchangeable
L2-34	0x9222	Bit10 of W2B module D	0 to 65535	0	-	Unchangeable
L2-35	0x9223	Bit11 of W2B module D	0 to 65535	0	-	Unchangeable
L2-36	0x9224	Bit12 of W2B module D	0 to 65535	0	-	Unchangeable
L2-37	0x9225	Bit13 of W2B module D	0 to 65535	0	-	Unchangeable
L2-38	0x9226	Bit14 of W2B module D	0 to 65535	0	-	Unchangeable
L2-39	0x9227	Bit15 of W2B module D	0 to 65535	0	-	Unchangeable
L2-40	0x9228	Bit0 of W2B module E	0 to 65535	0	-	Unchangeable
L2-41	0x9229	Bit1 of W2B module E	0 to 65535	0	-	Unchangeable
L2-42	0x922A	Bit2 of W2B module E	0 to 65535	0	-	Unchangeable
L2-43	0x922B	Bit3 of W2B module E	0 to 65535	0	-	Unchangeable
L2-44	0x922C	Bit4 of W2B module E	0 to 65535	0	-	Unchangeable
L2-45	0x922D	Bit5 of W2B module E	0 to 65535	0	-	Unchangeable
L2-46	0x922E	Bit6 of W2B module E	0 to 65535	0	-	Unchangeable

Para.	Comm. Addr.	Name	Reference	De fault	Unit	Change
L2-47	0x922F	Bit7 of W2B module E	0 to 65535	0	-	Unchangeable
L2-48	0x9230	Bit8 of W2B module E	0 to 65535	0	-	Unchangeable
L2-49	0x9231	Bit9 of W2B module E	0 to 65535	0	-	Unchangeable
L2-50	0x9232	Bit10 of W2B module E	0 to 65535	0	-	Unchangeable
L2-51	0x9233	Bit11 of W2B module E	0 to 65535	0	-	Unchangeable
L2-52	0x9234	Bit12 of W2B module E	0 to 65535	0	-	Unchangeable
L2-53	0x9235	Bit13 of W2B module E	0 to 65535	0	-	Unchangeable
L2-54	0x9236	Bit14 of W2B module E	0 to 65535	0	-	Unchangeable
L2-55	0x9237	Bit15 of W2B module E	0 to 65535	0	-	Unchangeable
L2-56	0x9238	Bit0 of W2B module F	0 to 65535	0	-	Unchangeable
L2-57	0x9239	Bit1 of W2B module F	0 to 65535	0	-	Unchangeable
L2-58	0x923A	Bit2 of W2B module F	0 to 65535	0	-	Unchangeable
L2-59	0x923B	Bit3 of W2B module F	0 to 65535	0	-	Unchangeable
L2-60	0x923C	Bit4 of W2B module F	0 to 65535	0	-	Unchangeable
L2-61	0x923D	Bit5 of W2B module F	0 to 65535	0	-	Unchangeable
L2-62	0x923E	Bit6 of W2B module F	0 to 65535	0	-	Unchangeable
L2-63	0x923F	Bit7 of W2B module F	0 to 65535	0	-	Unchangeable
L2-64	0x9240	Bit8 of W2B module F	0 to 65535	0	-	Unchangeable
L2-65	0x9241	Bit9 of W2B module F	0 to 65535	0	-	Unchangeable
L2-66	0x9242	Bit10 of W2B module F	0 to 65535	0	-	Unchangeable
L2-67	0x9243	Bit11 of W2B module F	0 to 65535	0	-	Unchangeable
L2-68	0x9244	Bit12 of W2B module F	0 to 65535	0	-	Unchangeable
L2-69	0x9245	Bit13 of W2B module F	0 to 65535	0	-	Unchangeable

Para.	Comm. Addr.	Name	Reference	De fault	Unit	Change
L2-70	0x9246	Bit14 of W2B module F	0 to 65535	0	-	Unchangea ble
L2-71	0x9247	Bit15 of W2B module F	0 to 65535	0	-	Unchangea ble
L2-72	0x9248	Bit0 of W2B module G	0 to 65535	0	-	Unchangea ble
L2-73	0x9249	Bit1 of W2B module G	0 to 65535	0	-	Unchangea ble
L2-74	0x924A	Bit2 of W2B module G	0 to 65535	0	-	Unchangea ble
L2-75	0x924B	Bit3 of W2B module G	0 to 65535	0	-	Unchangea ble
L2-76	0x924C	Bit4 of W2B module G	0 to 65535	0	-	Unchangea ble
L2-77	0x924D	Bit5 of W2B module G	0 to 65535	0	-	Unchangea ble
L2-78	0x924E	Bit6 of W2B module G	0 to 65535	0	-	Unchangea ble
L2-79	0x924F	Bit7 of W2B module G	0 to 65535	0	-	Unchangea ble
L2-80	0x9250	Bit8 of W2B module G	0 to 65535	0	-	Unchangea ble
L2-81	0x9251	Bit9 of W2B module G	0 to 65535	0	-	Unchangea ble
L2-82	0x9252	Bit10 of W2B module G	0 to 65535	0	-	Unchangea ble
L2-83	0x9253	Bit11 of W2B module G	0 to 65535	0	-	Unchangea ble
L2-84	0x9254	Bit12 of W2B module G	0 to 65535	0	-	Unchangea ble
L2-85	0x9255	Bit13 of W2B module G	0 to 65535	0	-	Unchangea ble
L2-86	0x9256	Bit14 of W2B module G	0 to 65535	0	-	Unchangea ble
L2-87	0x9257	Bit15 of W2B module G	0 to 65535	0	-	Unchangea ble
L2-88	0x9258	Bit0 of W2B module H	0 to 65535	0	-	Unchangea ble
L2-89	0x9259	Bit1 of W2B module H	0 to 65535	0	-	Unchangea ble
L2-90	0x925A	Bit2 of W2B module H	0 to 65535	0	-	Unchangea ble
L2-91	0x925B	Bit3 of W2B module H	0 to 65535	0	-	Unchangea ble
L2-92	0x925C	Bit4 of W2B module H	0 to 65535	0	-	Unchangea ble

Para.	Comm. Addr.	Name	Reference	De fault	Unit	Change
L2-93	0x925D	Bit5 of W2B module H	0 to 65535	0	-	Unchangea ble
L2-94	0x925E	Bit6 of W2B module H	0 to 65535	0	-	Unchangea ble
L2-95	0x925F	Bit7 of W2B module H	0 to 65535	0	-	Unchangea ble
L2-96	0x9260	Bit8 of W2B module H	0 to 65535	0	-	Unchangea ble
L2-97	0x9261	Bit9 of W2B module H	0 to 65535	0	-	Unchangea ble
L2-98	0x9262	Bit10 of W2B module H	0 to 65535	0	-	Unchangea ble
L2-99	0x9263	Bit11 of W2B module H	0 to 65535	0	-	Unchangea ble
L3-00	0x9300	Bit12 of W2B module H	0 to 65535	0	-	Unchangea ble
L3-01	0x9301	Bit13 of W2B module H	0 to 65535	0	-	Unchangea ble
L3-02	0x9302	Bit14 of W2B module H	0 to 65535	0	-	Unchangea ble
L3-03	0x9303	Bit15 of W2B module H	0 to 65535	0	-	Unchangea ble
L3-04	0x9304	Output of binary selector module A	0 to 65535	0	-	Unchangea ble
L3-05	0x9305	Output of binary selector module B	0 to 65535	0	-	Unchangea ble
L3-06	0x9306	Output of binary selector module C	0 to 65535	0	-	Unchangea ble
L3-07	0x9307	Output of binary selector module D	0 to 65535	0	-	Unchangea ble
L3-08	0x9308	Output of binary selector module E	0 to 65535	0	-	Unchangea ble
L3-09	0x9309	Output of binary selector module F	0 to 65535	0	-	Unchangea ble
L3-10	0x930A	Output of binary selector module G	0 to 65535	0	-	Unchangea ble
L3-11	0x930B	Output of binary selector module H	0 to 65535	0	-	Unchangea ble
L3-20	0x9314	Output of logic delay module A	0 to 65535	0	-	Unchangea ble
L3-21	0x9315	Output of logic delay module B	0 to 65535	0	-	Unchangea ble
L3-22	0x9316	Output of logic delay module C	0 to 65535	0	-	Unchangea ble
L3-23	0x9317	Output of logic delay module D	0 to 65535	0	-	Unchangea ble

Para.	Comm. Addr.	Name	Reference	Default	Unit	Change
L3-24	0x9318	Output of logic delay module E	0 to 65535	0	-	Unchangeable
L3-25	0x9319	Output of logic delay module F	0 to 65535	0	-	Unchangeable
L3-26	0x931A	Output of logic delay module G	0 to 65535	0	-	Unchangeable
L3-27	0x931B	Output of logic delay module H	0 to 65535	0	-	Unchangeable
L3-36	0x9324	Output of logic AND-OR module A	0 to 65535	0	-	Unchangeable
L3-37	0x9325	Output of logic AND-OR module B	0 to 65535	0	-	Unchangeable
L3-38	0x9326	Output of logic AND-OR module C	0 to 65535	0	-	Unchangeable
L3-39	0x9327	Output of logic AND-OR module D	0 to 65535	0	-	Unchangeable
L3-40	0x9328	Output of logic AND-OR module E	0 to 65535	0	-	Unchangeable
L3-41	0x9329	Output of logic AND-OR module F	0 to 65535	0	-	Unchangeable
L3-42	0x932A	Output of logic AND-OR module G	0 to 65535	0	-	Unchangeable
L3-43	0x932B	Output of logic AND-OR module H	0 to 65535	0	-	Unchangeable
L3-44	0x932C	Output of logic AND-OR module I	0 to 65535	0	-	Unchangeable
L3-45	0x932D	Output of logic AND-OR module J	0 to 65535	0	-	Unchangeable
L3-46	0x932E	Output of logic AND-OR module K	0 to 65535	0	-	Unchangeable
L3-47	0x932F	Output of logic AND-OR module L	0 to 65535	0	-	Unchangeable
L3-52	0x9334	Output of logic NOT module A	0 to 65535	0	-	Unchangeable
L3-53	0x9335	Output of logic NOT module B	0 to 65535	0	-	Unchangeable
L3-54	0x9336	Output of logic NOT module C	0 to 65535	0	-	Unchangeable
L3-55	0x9337	Output of logic NOT module D	0 to 65535	0	-	Unchangeable
L3-56	0x9338	Output of logic NOT module E	0 to 65535	0	-	Unchangeable
L3-57	0x9339	Output of logic NOT module F	0 to 65535	0	-	Unchangeable
L3-58	0x933A	Output of logic NOT module G	0 to 65535	0	-	Unchangeable

Para.	Comm. Addr.	Name	Reference	De fault	Unit	Change
L3-59	0x933B	Output of logic NOT module H	0 to 65535	0	-	Unchangea ble
L3-60	0x933C	Output of logic NOT module I	0 to 65535	0	-	Unchangea ble
L3-61	0x933D	Output of logic NOT module J	0 to 65535	0	-	Unchangea ble
L3-62	0x933E	Output of logic NOT module K	0 to 65535	0	-	Unchangea ble
L3-63	0x933F	Output of logic NOT module L	0 to 65535	0	-	Unchangea ble
L3-64	0x9340	Output of logic NOT module M	0 to 65535	0	-	Unchangea ble
L3-65	0x9341	Output of logic NOT module N	0 to 65535	0	-	Unchangea ble
L3-66	0x9342	Output of logic NOT module O	0 to 65535	0	-	Unchangea ble
L3-67	0x9343	Output of logic NOT module P	0 to 65535	0	-	Unchangea ble
L3-68	0x9344	Output of logic XOR/XNOR module A	0 to 65535	0	-	Unchangea ble
L3-69	0x9345	Output of logic XOR/XNOR module B	0 to 65535	0	-	Unchangea ble
L3-70	0x9346	Output of logic XOR/XNOR module C	0 to 65535	0	-	Unchangea ble
L3-71	0x9347	Output of logic XOR/XNOR module D	0 to 65535	0	-	Unchangea ble
L3-72	0x9348	Output of logic XOR/XNOR module E	0 to 65535	0	-	Unchangea ble
L3-73	0x9349	Output of logic XOR/XNOR module F	0 to 65535	0	-	Unchangea ble
L3-74	0x934A	Output of logic XOR/XNOR module G	0 to 65535	0	-	Unchangea ble
L3-75	0x934B	Output of logic XOR/XNOR module H	0 to 65535	0	-	Unchangea ble
L3-84	0x9354	Output of level-to-pulse conversion module A	0 to 65535	0	-	Unchangea ble

Para.	Comm. Addr.	Name	Reference	De fault	Unit	Change
L3-85	0x9355	Output of level-to-pulse conversion module B	0 to 65535	0	-	Unchangeable
L3-86	0x9356	Output of level-to-pulse conversion module C	0 to 65535	0	-	Unchangeable
L3-87	0x9357	Output of level-to-pulse conversion module D	0 to 65535	0	-	Unchangeable
L4-00	0x9400	Output of floating-point comparison module A	0 to 65535	0	-	Unchangeable
L4-01	0x9401	Output of floating-point comparison module B	0 to 65535	0	-	Unchangeable
L4-02	0x9402	Output of floating-point comparison module C	0 to 65535	0	-	Unchangeable
L4-03	0x9403	Output of floating-point comparison module D	0 to 65535	0	-	Unchangeable
L4-04	0x9404	Output of fixed-point comparison module E	0 to 65535	0	-	Unchangeable
L4-05	0x9405	Output of fixed-point comparison module F	0 to 65535	0	-	Unchangeable
L4-06	0x9406	Output of fixed-point comparison module G	0 to 65535	0	-	Unchangeable
L4-07	0x9407	Output of fixed-point comparison module H	0 to 65535	0	-	Unchangeable
L4-16	0x9410	Flag indicating whether input of floating-point absolute value module A is negative	0: Not negative 1: Negative	0	-	Unchangeable
L4-17	0x9411	Flag indicating whether input of floating-point absolute value module B is negative	0: Not negative 1: Negative	0	-	Unchangeable

Para.	Comm. Addr.	Name	Reference	Default	Unit	Change
L4-18	0x9412	Flag indicating whether input of floating-point absolute value module C is negative	0: Not negative 1: Negative	0	-	Unchangeable
L4-19	0x9413	Flag indicating whether input of floating-point absolute value module D is negative	0: Not negative 1: Negative	0	-	Unchangeable
L4-20	0x9414	Flag indicating whether input of floating-point absolute value module E is negative	0: Not negative 1: Negative	0	-	Unchangeable
L4-21	0x9415	Flag indicating whether input of fixed-point absolute value module F is negative	0: Not negative 1: Negative	0	-	Unchangeable
L4-22	0x9416	Flag indicating whether input of fixed-point absolute value module G is negative	0: Not negative 1: Negative	0	-	Unchangeable
L4-23	0x9417	Flag indicating whether input of fixed-point absolute value module H is negative	0: Not negative 1: Negative	0	-	Unchangeable
L4-32	0x9420	Flag indicating whether divisor of MULTIPLY/DIVIDE module A is 0	0: Not 0 1: 0	0	-	Unchangeable
L4-33	0x9421	Flag indicating whether divisor of MULTIPLY/DIVIDE module B is 0	0: Not 0 1: 0	0	-	Unchangeable
L4-34	0x9422	Flag indicating whether divisor of MULTIPLY/DIVIDE module C is 0	0: Not 0 1: 0	0	-	Unchangeable

Para.	Comm. Addr.	Name	Reference	De fault	Unit	Change
L4-35	0x9423	Flag indicating whether divisor of MULTIPLY/DIVIDE module D is 0	0: Not 0 1: 0	0	-	Unchangeable
L4-36	0x9424	Flag indicating whether divisor of MULTIPLY/DIVIDE module E is 0	0: Not 0 1: 0	0	-	Unchangeable
L4-37	0x9425	Flag indicating whether divisor of MULTIPLY/DIVIDE module F is 0	0: Not 0 1: 0	0	-	Unchangeable
L4-38	0x9426	Flag indicating whether divisor of MULTIPLY/DIVIDE module G is 0	0: Not 0 1: 0	0	-	Unchangeable
L4-39	0x9427	Flag indicating whether divisor of MULTIPLY/DIVIDE module H is 0	0: Not 0 1: 0	0	-	Unchangeable
L4-48	0x9430	Upper limit flag of limiting module A	0 to 65535	0	-	Unchangeable
L4-49	0x9431	Lower limit flag of limiting module A	0 to 65535	0	-	Unchangeable
L4-50	0x9432	Upper limit flag of limiting module B	0 to 65535	0	-	Unchangeable
L4-51	0x9433	Lower limit flag of limiting module B	0 to 65535	0	-	Unchangeable
L4-52	0x9434	Upper limit flag of limiting module C	0 to 65535	0	-	Unchangeable
L4-53	0x9435	Lower limit flag of limiting module C	0 to 65535	0	-	Unchangeable
L4-54	0x9436	Upper limit flag of limiting module D	0 to 65535	0	-	Unchangeable
L4-55	0x9437	Lower limit flag of limiting module D	0 to 65535	0	-	Unchangeable
L4-56	0x9438	Upper limit flag of limiting module E	0 to 65535	0	-	Unchangeable
L4-57	0x9439	Lower limit flag of limiting module E	0 to 65535	0	-	Unchangeable
L4-58	0x943A	Upper limit flag of limiting module F	0 to 65535	0	-	Unchangeable
L4-59	0x943B	Lower limit flag of limiting module F	0 to 65535	0	-	Unchangeable

Para.	Comm. Addr.	Name	Reference	De fault	Unit	Change
L4-64	0x9440	Hibernation enable flag	0 to 65535	0	-	Unchangea ble
L4-66	0x9442	Startup frequency RFG forcing	0 to 65535	0	-	Unchangea ble
L4-67	0x9443	Startup frequency stop flag	0 to 65535	0	-	Unchangea ble
L4-72	0x9448	Power-on duration reach	0 to 65535	0	-	Unchangea ble
L4-73	0x9449	Running duration reach	0 to 65535	0	-	Unchangea ble
L4-74	0x944A	Timing duration reach	0 to 65535	0	-	Unchangea ble
L4-75	0x944B	Current running duration reach	0 to 65535	0	-	Unchangea ble
L5-00	0x9500	System status word 1	Bit00: Ready to switch on Bit01: Ready to run Bit02: Running Bit03: Faulty Bit04: OFF2 Bit05: OFF3 Bit06: Switch-on blocking Bit07: Running with limits Bit08: No speed deviation Bit09: Local or remote Bit10: Target speed reach Bit11: Torque limiting Bit12: Positive speed Bit13: Negative speed Bit14: Running (pulse output) Bit15: User-defined state 0	0	-	Unchangea ble
L5-01	0x9501	System status word 2	Bit00: Self-check Bit01: Auto-tuning Bit02: Limit state Bit03: Alarm state Bit04: Speed mode Bit05: Torque mode Bit06: Position mode Bit07: RFG enable Bit08: RFG running Bit09: Stop upon fault Bit10: Normal running Bit11: Jogging Bit12: Decelerate to stop Bit13: Reserved Bit14: Terminal control Bit15: User-defined state 1	0	-	Unchangea ble
L5-02	0x9502	Main status word of drive	0 to 65535	0	-	Unchangea ble

Para.	Comm. Addr.	Name	Reference	De fault	Unit	Change
L5-03	0x9503	Auxiliary status word of drive	0 to 65535	0	-	Unchangea ble
L5-04	0x9504	Main status word of motor	0 to 65535	0	-	Unchangea ble
L5-05	0x9505	Auxiliary status word of motor	0 to 65535	0	-	Unchangea ble
L5-06	0x9506	Current state of system state machine	0: Initializing 1: Switch-on prohibited 2: Switch-on allowed 3: Running allowed 4: Started 5: Running 6: Stopped 7: Self-check 8: Auto-tuning	0	-	Unchangea ble
L5-07	0x9507	System state machine switchover command	Bit00: Startup active Bit01: Stop active Bit02: OFF2 stop active Bit03: OFF3 stop active Bit04: Running permission active Bit05: Running prohibition active Bit06: Stop upon fault active	0	-	Unchangea ble
L5-08	0x9508	System running state	0 to 65535	0	-	Unchangea ble
L5-09	0x9509	Current stop mode	0: Coast to stop 1: Stop at maximum capability 2: Quick stop 3: Decelerate to stop	0	-	Unchangea ble
L5-10	0x950A	DC braking state during deceleration to stop	0 to 65535	0	-	Unchangea ble
L5-17	0x9511	Bus voltage	0.0 V to 6553.5 V	0.0	V	Unchangea ble
L5-20	0x9514	IGBT temperature	0.0 to 6553.5	0.0	-	Unchangea ble
L5-21	0x9515	LED control word	0 to 65535	0	-	Unchangea ble
L5-22	0x9516	IDS control word	0 to 65535	0	-	Unchangea ble
L5-23	0x9517	SOP control word	0 to 65535	0	-	Unchangea ble
L5-24	0x9518	Command channel system command	0 to 65535	0	-	Unchangea ble
L5-25	0x9519	LED command clear flag	0 to 65535	0	-	Unchangea ble

Para.	Comm. Addr.	Name	Reference	De fault	Unit	Change
L5-26	0x951A	SOP command clear flag	0 to 65535	0	-	Unchangea ble
L5-27	0x951B	IDS command clear flag	0 to 65535	0	-	Unchangea ble
L5-28	0x951C	Terminal module command	0 to 65535	0	-	Unchangea ble
L5-29	0x951D	Input state of terminal module A	0 to 65535	0	-	Unchangea ble
L5-30	0x951E	Input state of terminal module B	0 to 65535	0	-	Unchangea ble
L5-31	0x951F	Running mode (normal jogging)	0 to 65535	0	-	Unchangea ble
L5-32	0x9520	Jogging source 12	0 to 65535	0	-	Unchangea ble
L5-33	0x9521	Control target	0: Speed control 1: Torque control 1: Position control	0	-	Unchangea ble
L5-34	0x9522	RFG status word	0 to 65535	0	-	Unchangea ble
L5-35	0x9523	RFG command word	0 to 65535	0	-	Unchangea ble
L5-38	0x9526	V/f separation time set to 0	0 to 65535	0	-	Unchangea ble
L5-40	0x9528	AI1 raw sampling value	–32.767 V to +32.767 V	0.000	V	Unchangea ble
L5-41	0x9529	AI2 raw sampling value	–32.767 V to +32.767 V	0.000	V	Unchangea ble
L5-42	0x952A	AI3 raw sampling value	–32.767 V to +32.767 V	0.000	V	Unchangea ble
L5-43	0x952B	AI1 sampling value after correction	–327.67 V to +327.67 V	0.00	V	Unchangea ble
L5-44	0x952C	AI2 sampling value after correction	–327.67 V to +327.67 V	0.00	V	Unchangea ble
L5-45	0x952D	AI3 sampling value after correction	–327.67 V to +327.67 V	0.00	V	Unchangea ble
L5-46	0x952E	Input value of AI1 curve	–327.67 V to +327.67 V	0.00	V	Unchangea ble
L5-47	0x952F	Input value of AI2 curve	–327.67 V to +327.67 V	0.00	V	Unchangea ble
L5-48	0x9530	Input value of AI3 curve	–327.67 V to +327.67 V	0.00	V	Unchangea ble
L5-49	0x9531	AO1 output (before correction)	–327.67 V to +327.67 V	0.00	V	Unchangea ble
L5-50	0x9532	AO2 output (before correction)	–327.67 V to +327.67 V	0.00	V	Unchangea ble

Para.	Comm. Addr.	Name	Reference	De fault	Unit	Change
L5-51	0x9533	AO1 output (after correction)	–32.767 V to +32.767 V	0.000	V	Unchangeable
L5-52	0x9534	AO2 output (after correction)	–32.767 V to +32.767 V	0.000	V	Unchangeable
L5-53	0x9535	HDI input frequency	0.00 kHz to 655.35 kHz	0.00	kHz	Unchangeable
L5-54	0x9536	Counter output	0 to 65535	0	-	Unchangeable
L5-55	0x9537	Length count	0 to 65535	0	-	Unchangeable
L5-56	0x9538	Command word set through communication	Bit00:OFF1 Bit01: OFF2 Bit02: OFF3 Bit03: Running permission Bit04: Reset Bit05: JOG1 Bit06: JOG2 Bit07: Speed negation	0	-	Unchangeable
L5-57	0x9539	Communication setpoint	0.0% to 6553.5%	0.0	%	Unchangeable
L5-58	0x953A	Communication command clear flag	0 to 65535	0	-	Unchangeable
L5-59	0x953B	RFG performance forcing enable	0 to 65535	0	-	Unchangeable
L5-60	0x953C	Pre-auto-tuning command	0 to 65535	0	-	Unchangeable
L5-62	0x953E	DI immediate DC braking command	0 to 65535	0	-	Unchangeable
L5-63	0x953F	Drive sampling DI state	0 to 65535	0	-	Unchangeable
L5-64	0x9540	Drive output DI state	0 to 65535	0	-	Unchangeable
L5-65	0x9541	Final output DI state	0 to 65535	0	-	Unchangeable
L5-66	0x9542	DI state inversion	0 to 65535	0	-	Unchangeable
L5-67	0x9543	DO state before filtering	0 to 65535	0	-	Unchangeable
L5-68	0x9544	Final output DO state	0 to 65535	0	-	Unchangeable
L5-69	0x9545	I/O monitoring state	0 to 65535	0	-	Unchangeable
L5-70	0x9546	Main speed	0.0% to 6553.5%	0.0	%	Unchangeable
L5-71	0x9547	Auxiliary speed	0.0% to 6553.5%	0.0	%	Unchangeable

Para.	Comm. Addr.	Name	Reference	De fault	Unit	Change
L5-73	0x9549	AI2 sampling current 1 after correction (impedance: 500 Ω)	–327.67 mA to +327.67 mA	0.00	mA	Unchangeable
L5-75	0x954B	AO1 output current (before correction)	–327.67 mA to +327.67 mA	0.00	mA	Unchangeable
L5-76	0x954C	AO2 output current (before correction)	–327.67 mA to +327.67 mA	0.00	mA	Unchangeable
L5-77	0x954D	AI2 sampling current 2 after correction (impedance: 250 Ω)	–327.67 mA to +327.67 mA	0.00	mA	Unchangeable
L5-78	0x954E	Flag indicating whether mapping write data is 32-bit	0 to 65535	0	-	Unchangeable
L5-79	0x954F	External communication data low-order 16 bits 1	0 to 65535	0	-	Unchangeable
L5-80	0x9550	External communication data low-order 16 bits 2	0 to 65535	0	-	Unchangeable
L5-81	0x9551	External communication data low-order 16 bits 3	0 to 65535	0	-	Unchangeable
L5-82	0x9552	External communication data low-order 16 bits 4	0 to 65535	0	-	Unchangeable
L5-83	0x9553	External communication data low-order 16 bits 5	0 to 65535	0	-	Unchangeable
L5-84	0x9554	External communication data low-order 16 bits 6	0 to 65535	0	-	Unchangeable
L5-85	0x9555	External communication data low-order 16 bits 7	0 to 65535	0	-	Unchangeable
L5-86	0x9556	External communication data low-order 16 bits 8	0 to 65535	0	-	Unchangeable

Para.	Comm. Addr.	Name	Reference	De fault	Unit	Change
L5-87	0x9557	External communication data low-order 16 bits 9	0 to 65535	0	-	Unchangeable
L5-88	0x9558	External communication data low-order 16 bits 10	0 to 65535	0	-	Unchangeable
L5-89	0x9559	External communication data high-order 16 bits 1	0 to 65535	0	-	Unchangeable
L5-90	0x955A	External communication data high-order 16 bits 2	0 to 65535	0	-	Unchangeable
L5-91	0x955B	External communication data high-order 16 bits 3	0 to 65535	0	-	Unchangeable
L5-92	0x955C	External communication data high-order 16 bits 4	0 to 65535	0	-	Unchangeable
L5-93	0x955D	External communication data high-order 16 bits 5	0 to 65535	0	-	Unchangeable
L5-94	0x955E	External communication data high-order 16 bits 6	0 to 65535	0	-	Unchangeable
L5-95	0x955F	External communication data high-order 16 bits 7	0 to 65535	0	-	Unchangeable
L5-96	0x9560	External communication data high-order 16 bits 8	0 to 65535	0	-	Unchangeable
L5-97	0x9561	External communication data high-order 16 bits 9	0 to 65535	0	-	Unchangeable
L5-98	0x9562	External communication data high-order 16 bits 10	0 to 65535	0	-	Unchangeable

Para.	Comm. Addr.	Name	Reference	Default	Unit	Change
L6-00	0x9600	Rated motor speed	0 RPM to 65535 RPM	0	RPM	Unchangeable
L6-01	0x9601	Rated motor frequency	0.0 Hz to 6553.5 Hz	0.0	Hz	Unchangeable
L6-02	0x9602	Rated voltage	0.0 V to 6553.5 V	0.0	V	Unchangeable
L6-03	0x9603	Rated current	0.0 A to 6553.5 A	0.0	A	Unchangeable
L6-04	0x9604	Rated power	0.0 kW to 6553.5 kW	0.0	kW	Unchangeable
L6-05	0x9605	System main status word C	Bit00: Control channel Bit01: Reference channel Bit02: Motor selection bit 0 Bit03: Motor selection bit 1 Bit04: Exception (fault and alarm) Bit05: EEPROM idle	0	-	Unchangeable
L6-06	0x9606	Motor object auxiliary status word 2	0 to 65535	0	-	Unchangeable
L6-07	0x9607	V/f separation stop frequency control	0 to 65535	0	-	Unchangeable
L6-08	0x9608	Torque control frequency offset mode	0 to 65535	0	-	Unchangeable
L6-09	0x9609	RFG acceleration/ deceleration state	0 to 65535	0	-	Unchangeable
L6-10	0x960A	RFG rounding state	0 to 65535	0	-	Unchangeable
L6-11	0x960B	Inverter protection state monitoring	Bit00: Pulse-by-pulse current limit protection Bit01: Pulse-by-pulse current limit inhibition Bit02: Input phase loss Bit03: Output phase loss Bit04: Pre-charge resistor exception Bit05: Drive overload Bit06: Drive pre-overload Bit07: Bus overvoltage Bit08: Bus undervoltage Bit09: Output overcurrent Bit10: Drive overtemperature Bit11: Drive pre-overtemperature Bit12: Leakage current protection Bit13: Current control exception Bit14: Software overcurrent Bit15: Short-to-ground (reserved)	0	-	Unchangeable
L6-12	0x960C	Modulation module status word	0 to 65535	0	-	Unchangeable
L6-13	0x960D	Body sampling status word	0 to 65535	0	-	Unchangeable

Para.	Comm. Addr.	Name	Reference	De fault	Unit	Change
L6-14	0x960E	AI2 temperature mode - motor temperature sampling value	–32767°C to +32767°C	0	°C	Unchangeable
L6-15	0x960F	AI3 temperature mode - motor temperature sampling value	0°C to 65535°C	0	°C	Unchangeable
L6-16	0x9610	Motor protection status word	Bit00: Motor overload Bit01: Motor pre-overload Bit02: Output load loss (reserved) Bit03: PG-detected fault (reserved) Bit04: Current control error Bit05: Locked-rotor Bit06: Motor wire breakage, two- or three-phase loss (reserved) Bit07: Excessive motor load at constant current (reserved) Bit08:VC out-of-step due to magnetic flux exception Bit09: Abnormal speed fluctuation (reserved) Bit10: Motor parameter setting error (reserved) Bit11: HSVM sampling card wire breakage and misphase (reserved) Bit12: Synchronous motor overcurrent (reserved)	0	-	Unchangeable
L6-17	0x9611	Speed controller status word	Bit00: Speed loop enable Bit01: Actual state of integral mode Bit02: Integral forcing enable Bit03: Feedforward torque enable Bit04: Positive limit reach Bit05: Negative limit reach Bit06: Integral hold enable Bit07: Fast integral cancel enable Bit08: Anti-load disturbance enable Bit09: Reserved Bit10: Reserved Bit11: Reserved Bit12: Reserved Bit13: Reserved Bit14: Reserved Bit15: Reserved	0	-	Unchangeable

Para.	Comm. Addr.	Name	Reference	Default	Unit	Change
L6-18	0x9612	VDC control status word	Bit00: Undervoltage suppression enable Bit01: Overvoltage suppression enable Bit02: Low frequency lower limit for enabling undervoltage suppression Bit03: Reserved Bit04: Reserved Bit05: Reserved Bit06: Reserved Bit07: Reserved Bit08: Reserved Bit09: Reserved Bit10: Reserved Bit11: Reserved Bit12: Reserved Bit13: Reserved Bit14: Reserved Bit15: Reserved	0	-	Unchangeable
L6-19	0x9613	Excitation module status word	0 to 65535	0	-	Unchangeable
L6-20	0x9614	Motor model status word	0 to 65535	0	-	Unchangeable
L6-21	0x9615	Motor current loop status word	0 to 65535	0	-	Unchangeable
L6-22	0x9616	Motor V/f control status word	0 to 65535	0	-	Unchangeable
L6-23	0x9617	Per-unit frequency after HDO function source selection	0.00% to 655.35%	0.00	%	Unchangeable
L6-24	0x9618	Per-unit frequency before HDO curve correction	0.00% to 655.35%	0.00	%	Unchangeable
L6-25	0x9619	Per-unit value of HDO final output frequency	0.00% to 655.35%	0.00	%	Unchangeable
L6-26	0x961A	Actual value of HDO final output frequency	0.00 kHz to 655.35 kHz	0.00	kHz	Unchangeable

Para.	Comm. Addr.	Name	Reference	Default	Unit	Change
L6-35	0x9623	System main status word D	Bit0: Zero-speed running (inactive at stop) Bit1: Zero-speed running (active at stop) Bit2: Frequency-level detection 1 Bit3: Frequency-level detection 2 Bit4: AI1 > AI2 Bit5: Simple PLC cycle completion Bit6: Communication setpoint Bit7: STO state Bit8: Current 1 reach Bit9: Current 2 reach Bit10: Zero current state Bit11: Output overcurrent Bit12: Motor overload pre-warning Bit13: AC drive overload pre-warning Bit14: Undervoltage Bit15: Load loss	0	-	Unchangeable
L7-00	0x9700	Per-unit constant value 22	0 to 65535	0	-	Unchangeable
L7-01	0x9701	Per-unit constant value 23	0 to 65535	0	-	Unchangeable
L7-02	0x9702	Per-unit constant value 24	0 to 65535	0	-	Unchangeable
L7-03	0x9703	Per-unit constant value 25	0 to 65535	0	-	Unchangeable
L7-04	0x9704	Per-unit constant value 26	0 to 65535	0	-	Unchangeable
L7-05	0x9705	Per-unit constant value 27	0 to 65535	0	-	Unchangeable
L7-06	0x9706	Per-unit constant value 28	0 to 65535	0	-	Unchangeable
L7-07	0x9707	Per-unit constant value 29	0 to 65535	0	-	Unchangeable
L7-08	0x9708	Per-unit constant value 30	0 to 65535	0	-	Unchangeable
L7-09	0x9709	Per-unit constant value 31	0 to 65535	0	-	Unchangeable
L7-10	0x970A	Per-unit constant value 32	0 to 65535	0	-	Unchangeable
L7-11	0x970B	Per-unit constant value 33	0 to 65535	0	-	Unchangeable
L7-12	0x970C	Per-unit constant value 34	0 to 65535	0	-	Unchangeable
L7-13	0x970D	Per-unit constant value 35	0 to 65535	0	-	Unchangeable
L7-14	0x970E	Per-unit constant value 36	0 to 65535	0	-	Unchangeable

Para.	Comm. Addr.	Name	Reference	De fault	Unit	Change
L7-15	0x970F	Per-unit constant value 37	0 to 65535	0	-	Unchangea ble
L7-16	0x9710	Per-unit constant value 38	0 to 65535	0	-	Unchangea ble
L7-17	0x9711	Per-unit constant value 39	0 to 65535	0	-	Unchangea ble
L7-18	0x9712	Per-unit constant value 40	0 to 65535	0	-	Unchangea ble
L7-19	0x9713	Per-unit constant value 41	0 to 65535	0	-	Unchangea ble
L7-20	0x9714	Per-unit constant value 42	0 to 65535	0	-	Unchangea ble
L7-21	0x9715	B2W module A	0 to 65535	0	-	Unchangea ble
L7-22	0x9716	B2W module B	0 to 65535	0	-	Unchangea ble
L7-23	0x9717	B2W module C	0 to 65535	0	-	Unchangea ble
L7-24	0x9718	B2W module D	0 to 65535	0	-	Unchangea ble
L7-25	0x9719	DW-W HIWORD A	0 to 65535	0	-	Unchangea ble
L7-26	0x971A	DW-W LOWORD A	0 to 65535	0	-	Unchangea ble
L7-27	0x971B	DW-W HIWORD B	0 to 65535	0	-	Unchangea ble
L7-28	0x971C	DW-W LOWORD B	0 to 65535	0	-	Unchangea ble
L7-29	0x971D	DW-W HIWORD C	0 to 65535	0	-	Unchangea ble
L7-30	0x971E	DW-W LOWORD C	0 to 65535	0	-	Unchangea ble
L7-31	0x971F	DW-W HIWORD D	0 to 65535	0	-	Unchangea ble
L7-32	0x9720	DW-W LOWORD D	0 to 65535	0	-	Unchangea ble
L7-36	0x9724	16-bit parameter monitoring 1	0 to 65535	0	-	Unchangea ble
L7-37	0x9725	16-bit parameter monitoring 2	0 to 65535	0	-	Unchangea ble
L7-38	0x9726	16-bit parameter monitoring 3	0 to 65535	0	-	Unchangea ble
L7-39	0x9727	16-bit parameter monitoring 4	0 to 65535	0	-	Unchangea ble
L7-40	0x9728	16-bit parameter monitoring 5	0 to 65535	0	-	Unchangea ble

Para.	Comm. Addr.	Name	Reference	De fault	Unit	Change
L7-41	0x9729	Output of word selector A	0 to 65535	0	-	Unchangea ble
L7-42	0x972A	Output of word selector B	0 to 65535	0	-	Unchangea ble
L7-43	0x972B	Output of word selector C	0 to 65535	0	-	Unchangea ble
L7-44	0x972C	Output of word selector D	0 to 65535	0	-	Unchangea ble
L7-50	0x9732	Internal parameter monitoring output 1	–32767 to +32767	0	-	Unchangea ble
L7-51	0x9733	Internal parameter monitoring output 2	–32767 to +32767	0	-	Unchangea ble
L7-52	0x9734	Internal parameter monitoring output 3	–32767 to +32767	0	-	Unchangea ble
L7-53	0x9735	Internal parameter monitoring output 4	–32767 to +32767	0	-	Unchangea ble
L7-54	0x9736	Internal parameter monitoring output 5	–32767 to +32767	0	-	Unchangea ble
L7-55	0x9737	Internal parameter monitoring output 6	–32767 to +32767	0	-	Unchangea ble
L7-56	0x9738	Internal parameter monitoring output 7	–32767 to +32767	0	-	Unchangea ble
L7-57	0x9739	Internal parameter monitoring output 8	–32767 to +32767	0	-	Unchangea ble
L9-00	0x9900	Output of W-DW module A	0 to 65535	0	-	Unchangea ble
L9-01	0x9901	Output of W-DW module B	0 to 65535	0	-	Unchangea ble
L9-02	0x9902	Output of W-DW module C	0 to 65535	0	-	Unchangea ble
L9-03	0x9903	Output of W-DW module D	0 to 65535	0	-	Unchangea ble
L9-04	0x9904	Output of DWord selector module A	0 to 65535	0	-	Unchangea ble
L9-05	0x9905	Output of DWord selector module B	0 to 65535	0	-	Unchangea ble
L9-06	0x9906	Output of DWord selector module C	0 to 65535	0	-	Unchangea ble
L9-07	0x9907	Output of DWord selector module D	0 to 65535	0	-	Unchangea ble
L9-08	0x9908	Output of fixed-point absolute value module F	0 to 65535	0	-	Unchangea ble
L9-09	0x9909	Output of fixed-point absolute value module G	0 to 65535	0	-	Unchangea ble

Para.	Comm. Addr.	Name	Reference	Default	Unit	Change
L9-10	0x990A	Output of fixed-point absolute value module H	0 to 65535	0	-	Unchangeable
L9-11	0x990B	Output of fixed-point ADD/SUBTRACT module F	0 to 65535	0	-	Unchangeable
L9-12	0x990C	Output of fixed-point ADD/SUBTRACT module G	0 to 65535	0	-	Unchangeable
L9-13	0x990D	Output of fixed-point ADD/SUBTRACT module H	0 to 65535	0	-	Unchangeable
L9-14	0x990E	Output of fixed-point MULTIPLY/DIVIDE module F	0 to 65535	0	-	Unchangeable
L9-15	0x990F	Output of fixed-point MULTIPLY/DIVIDE module G	0 to 65535	0	-	Unchangeable
L9-16	0x9910	Output of fixed-point MULTIPLY/DIVIDE module H	0 to 65535	0	-	Unchangeable
L9-17	0x9911	Output of fixed-point filter module E	0 to 65535	0	-	Unchangeable
L9-18	0x9912	Output of fixed-point filter module F	0 to 65535	0	-	Unchangeable
L9-19	0x9913	Output of fixed-point limiting module E	0 to 65535	0	-	Unchangeable
L9-20	0x9914	Output of fixed-point limiting module F	0 to 65535	0	-	Unchangeable
L9-21	0x9915	32-bit parameter monitoring 1	0 to 65535	0	-	Unchangeable
L9-22	0x9916	32-bit parameter monitoring 2	0 to 65535	0	-	Unchangeable
L9-23	0x9917	32-bit parameter monitoring 3	0 to 65535	0	-	Unchangeable
L9-24	0x9918	32-bit parameter monitoring 4	0 to 65535	0	-	Unchangeable
L9-25	0x9919	32-bit parameter monitoring 5	0 to 65535	0	-	Unchangeable

Para.	Comm. Addr.	Name	Reference	Default	Unit	Change
L9-30	0x991E	Variable connector viewing output 1	0 to 65535	0	-	Unchangeable
L9-31	0x991F	Variable connector viewing output 2	0 to 65535	0	-	Unchangeable
L9-32	0x9920	Variable connector viewing output 3	0 to 65535	0	-	Unchangeable
L9-33	0x9921	Variable connector viewing output 4	0 to 65535	0	-	Unchangeable
L9-34	0x9922	Variable connector viewing output 5	0 to 65535	0	-	Unchangeable
L9-35	0x9923	Variable connector viewing output 6	0 to 65535	0	-	Unchangeable
L9-36	0x9924	Variable connector viewing output 7	0 to 65535	0	-	Unchangeable
L9-37	0x9925	Variable connector viewing output 8	0 to 65535	0	-	Unchangeable
LB-00	0x9B00	AI1 input per-unit value	0.0% to 6553.5%	0.0	%	Unchangeable
LB-01	0x9B01	AI2 input per-unit value	0.0% to 6553.5%	0.0	%	Unchangeable
LB-02	0x9B02	AI3 input per-unit value	0.0% to 6553.5%	0.0	%	Unchangeable
LB-03	0x9B03	HDI input per-unit value	0.0% to 6553.5%	0.0	%	Unchangeable
LB-04	0x9B04	Per-unit value of speed reference set through communication	0.0% to 6553.5%	0.0	%	Unchangeable
LB-05	0x9B05	Main speed reference	0.0% to 6553.5%	0.0	%	Unchangeable
LB-06	0x9B06	Auxiliary speed reference	0.0% to 6553.5%	0.0	%	Unchangeable
LB-07	0x9B07	Channel target speed	0.0% to 6553.5%	0.0	%	Unchangeable
LB-08	0x9B08	Channel supplementary speed	0.0% to 6553.5%	0.0	%	Unchangeable
LB-09	0x9B09	Supplementary speed setpoint	0.0% to 6553.5%	0.0	%	Unchangeable
LB-10	0x9B0A	Maximum forward speed	0.0% to 6553.5%	0.0	%	Unchangeable
LB-11	0x9B0B	Minimum forward speed	0.0% to 6553.5%	0.0	%	Unchangeable
LB-12	0x9B0C	Maximum reverse speed	0.0% to 6553.5%	0.0	%	Unchangeable

Para.	Comm. Addr.	Name	Reference	De fault	Unit	Change
LB-13	0x9B0D	Minimum reverse speed	0.0% to 6553.5%	0.0	%	Unchangea ble
LB-14	0x9B0E	Forward limit	0.0% to 6553.5%	0.0	%	Unchangea ble
LB-15	0x9B0F	Reverse limit	0.0% to 6553.5%	0.0	%	Unchangea ble
LB-16	0x9B10	Speed reference - raw	0.0% to 6553.5%	0.0	%	Unchangea ble
LB-17	0x9B11	Speed reference - direction limit	0.0% to 6553.5%	0.0	%	Unchangea ble
LB-18	0x9B12	Speed reference - after limiting	0.0% to 6553.5%	0.0	%	Unchangea ble
LB-19	0x9B13	Speed reference - after skip frequency	0.0% to 6553.5%	0.0	%	Unchangea ble
LB-20	0x9B14	Speed reference - after ramp shift	0.0% to 6553.5%	0.0	%	Unchangea ble
LB-21	0x9B15	Torque reference	0.0% to 6553.5%	0.0	%	Unchangea ble
LB-22	0x9B16	Supplementary torque	0.0% to 6553.5%	0.0	%	Unchangea ble
LB-23	0x9B17	Torque reference after filtering	0.0% to 6553.5%	0.0	%	Unchangea ble
LB-24	0x9B18	Target torque reference	0.0% to 6553.5%	0.0	%	Unchangea ble
LB-25	0x9B19	Maximum torque	0.0% to 6553.5%	0.0	%	Unchangea ble
LB-26	0x9B1A	Minimum torque	0.0% to 6553.5%	0.0	%	Unchangea ble
LB-27	0x9B1B	RFG reference input	0.0% to 6553.5%	0.0	%	Unchangea ble
LB-28	0x9B1C	RFG calculation input	0.0% to 6553.5%	0.0	%	Unchangea ble
LB-29	0x9B1D	RFG actual target	0.0% to 6553.5%	0.0	%	Unchangea ble
LB-30	0x9B1E	RFG calculation output	0.0% to 6553.5%	0.0	%	Unchangea ble
LB-31	0x9B1F	RFG final output (maximum per-unit value)	0.0% to 6553.5%	0.0	%	Unchangea ble
LB-32	0x9B20	RFG final output (rated per-unit value)	0.0% to 6553.5%	0.0	%	Unchangea ble
LB-33	0x9B21	Updown upper limit	0.0% to 6553.5%	0.0	%	Unchangea ble

Para.	Comm. Addr.	Name	Reference	De fault	Unit	Change
LB-34	0x9B22	Updown lower limit	0.0% to 6553.5%	0.0	%	Unchangea ble
LB-35	0x9B23	RFG acceleration	0.0% to 6553.5%	0.0	%	Unchangea ble
LB-36	0x9B24	V/f separation voltage output	0.0% to 6553.5%	0.0	%	Unchangea ble
LB-37	0x9B25	RFG force value of startup frequency function	0.0% to 6553.5%	0.0	%	Unchangea ble
LB-38	0x9B26	Speed limit in torque control mode	0.0% to 6553.5%	0.0	%	Unchangea ble
LB-39	0x9B27	Frequency offset in torque control mode	0.0% to 6553.5%	0.0	%	Unchangea ble
LB-40	0x9B28	Running frequency	0.0% to 6553.5%	0.0	%	Unchangea ble
LB-41	0x9B29	Frequency reference	0.0% to 6553.5%	0.0	%	Unchangea ble
LB-42	0x9B2A	Speed reference - after UpDn	0.0% to 6553.5%	0.0	%	Unchangea ble
LC-00	0x9C00	Final frequency reference	0.0% to 6553.5%	0.0	%	Unchangea ble
LC-01	0x9C01	Final voltage reference	0.0% to 6553.5%	0.0	%	Unchangea ble
LC-02	0x9C02	Output voltage without limit	0.0% to 6553.5%	0.0	%	Unchangea ble
LC-03	0x9C03	Voltage phase angle	0.0% to 6553.5%	0.0	%	Unchangea ble
LC-04	0x9C04	Maximum output voltage	0.0% to 6553.5%	0.0	%	Unchangea ble
LC-05	0x9C05	Current loop saturation voltage	0.0% to 6553.5%	0.0	%	Unchangea ble
LC-06	0x9C06	Torque reference	0.0% to 6553.5%	0.0	%	Unchangea ble
LC-07	0x9C07	Final flux reference	0.0% to 6553.5%	0.0	%	Unchangea ble
LC-08	0x9C08	Excitation current reference	0.0% to 6553.5%	0.0	%	Unchangea ble
LC-09	0x9C09	Torque current reference	0.0% to 6553.5%	0.0	%	Unchangea ble
LC-10	0x9C0A	Rotor speed	0.0% to 6553.5%	0.0	%	Unchangea ble
LC-11	0x9C0B	Encoder speed	0.0% to 6553.5%	0.0	%	Unchangea ble

Para.	Comm. Addr.	Name	Reference	De fault	Unit	Change
LC-12	0x9C0C	Output torque	0.0% to 6553.5%	0.0	%	Unchangea ble
LC-13	0x9C0D	Flux amplitude	0.0% to 6553.5%	0.0	%	Unchangea ble
LC-14	0x9C0E	Flux angle	0.0% to 6553.5%	0.0	%	Unchangea ble
LC-15	0x9C0F	Synchronization frequency	0.0% to 6553.5%	0.0	%	Unchangea ble
LC-16	0x9C10	Synchronous rotation angle	0.0% to 6553.5%	0.0	%	Unchangea ble
LC-17	0x9C11	Motor object output power	0.0% to 6553.5%	0.0	%	Unchangea ble
LC-18	0x9C12	Output voltage amplitude	0.0% to 6553.5%	0.0	%	Unchangea ble
LC-19	0x9C13	Output current amplitude	0.0% to 6553.5%	0.0	%	Unchangea ble
LC-20	0x9C14	Actual excitation current of motor	0.0% to 6553.5%	0.0	%	Unchangea ble
LC-21	0x9C15	Actual torque current of motor	0.0% to 6553.5%	0.0	%	Unchangea ble
LC-22	0x9C16	Output power	0.0% to 6553.5%	0.0	%	Unchangea ble
LC-23	0x9C17	PWMU	0.0% to 6553.5%	0.0	%	Unchangea ble
LC-24	0x9C18	PWMV	0.0% to 6553.5%	0.0	%	Unchangea ble
LC-25	0x9C19	PWMW	0.0% to 6553.5%	0.0	%	Unchangea ble
LC-26	0x9C1A	IU	0.0% to 6553.5%	0.0	%	Unchangea ble
LC-27	0x9C1B	IV	0.0% to 6553.5%	0.0	%	Unchangea ble
LC-28	0x9C1C	IW	0.0% to 6553.5%	0.0	%	Unchangea ble
LC-31	0x9C1F	Drive bus voltage	0.0% to 6553.5%	0.0	%	Unchangea ble
LC-32	0x9C20	Accumulative drive overload	0.0% to 6553.5%	0.0	%	Unchangea ble
LC-33	0x9C21	Accumulative motor overload	0.0% to 6553.5%	0.0	%	Unchangea ble
LC-34	0x9C22	Output voltage phase	0.0% to 6553.5%	0.0	%	Unchangea ble
LC-35	0x9C23	Output current phase	0.0% to 6553.5%	0.0	%	Unchangea ble
LC-36	0x9C24	General PID output	0.0% to 6553.5%	0.0	%	Unchangea ble

Para.	Comm. Addr.	Name	Reference	De fault	Unit	Change
LC-37	0x9C25	General PID error	0.0% to 6553.5%	0.0	%	Unchangea ble
LC-38	0x9C26	General PID reference	0.0% to 6553.5%	0.0	%	Unchangea ble
LC-39	0x9C27	General PID feedback	0.0% to 6553.5%	0.0	%	Unchangea ble
LC-40	0x9C28	General PID proportional output	0.0% to 6553.5%	0.0	%	Unchangea ble
LC-41	0x9C29	General PID integral output	0.0% to 6553.5%	0.0	%	Unchangea ble
LC-42	0x9C2A	General PID derivative output	0.0% to 6553.5%	0.0	%	Unchangea ble
LC-92	0x9C5C	Variable connector viewing output 1	0.0% to 6553.5%	0.0	%	Unchangea ble
LC-93	0x9C5D	Variable connector viewing output 2	0.0% to 6553.5%	0.0	%	Unchangea ble
LC-94	0x9C5E	Variable connector viewing output 3	0.0% to 6553.5%	0.0	%	Unchangea ble
LC-95	0x9C5F	Variable connector viewing output 4	0.0% to 6553.5%	0.0	%	Unchangea ble
LC-96	0x9C60	Variable connector viewing output 5	0.0% to 6553.5%	0.0	%	Unchangea ble
LC-97	0x9C61	Variable connector viewing output 6	0.0% to 6553.5%	0.0	%	Unchangea ble
LC-98	0x9C62	Variable connector viewing output 7	0.0% to 6553.5%	0.0	%	Unchangea ble
LC-99	0x9C63	Variable connector viewing output 8	0.0% to 6553.5%	0.0	%	Unchangea ble
LD-00	0x9D00	Output of floating-point selector module A	0.0% to 6553.5%	0.0	%	Unchangea ble
LD-01	0x9D01	Output of floating-point selector module B	0.0% to 6553.5%	0.0	%	Unchangea ble
LD-02	0x9D02	Output of floating-point selector module C	0.0% to 6553.5%	0.0	%	Unchangea ble
LD-03	0x9D03	Output of floating-point selector module D	0.0% to 6553.5%	0.0	%	Unchangea ble
LD-04	0x9D04	Output of floating-point selector module E	0.0% to 6553.5%	0.0	%	Unchangea ble

Para.	Comm. Addr.	Name	Reference	Default	Unit	Change
LD-05	0x9D05	Output of floating-point selector module F	0.0% to 6553.5%	0.0	%	Unchangeable
LD-06	0x9D06	Output of floating-point selector module G	0.0% to 6553.5%	0.0	%	Unchangeable
LD-07	0x9D07	Output of floating-point selector module H	0.0% to 6553.5%	0.0	%	Unchangeable
LD-08	0x9D08	Output of floating-point absolute value module A	0.0% to 6553.5%	0.0	%	Unchangeable
LD-09	0x9D09	Output of floating-point absolute value module B	0.0% to 6553.5%	0.0	%	Unchangeable
LD-10	0x9D0A	Output of floating-point absolute value module C	0.0% to 6553.5%	0.0	%	Unchangeable
LD-11	0x9D0B	Output of floating-point absolute value module D	0.0% to 6553.5%	0.0	%	Unchangeable
LD-12	0x9D0C	Output of floating-point absolute value module E	0.0% to 6553.5%	0.0	%	Unchangeable
LD-13	0x9D0D	Output of floating-point ADD/SUBTRACT module A	0.0% to 6553.5%	0.0	%	Unchangeable
LD-14	0x9D0E	Output of floating-point ADD/SUBTRACT module B	0.0% to 6553.5%	0.0	%	Unchangeable
LD-15	0x9D0F	Output of floating-point ADD/SUBTRACT module C	0.0% to 6553.5%	0.0	%	Unchangeable
LD-16	0x9D10	Output of floating-point ADD/SUBTRACT module D	0.0% to 6553.5%	0.0	%	Unchangeable
LD-17	0x9D11	Output of floating-point ADD/SUBTRACT module E	0.0% to 6553.5%	0.0	%	Unchangeable
LD-18	0x9D12	Output of floating-point MULTIPLY/DIVIDE module A	0.0% to 6553.5%	0.0	%	Unchangeable

Para.	Comm. Addr.	Name	Reference	De fault	Unit	Change
LD-19	0x9D13	Output of floating-point MULTIPLY/ DIVIDE module B	0.0% to 6553.5%	0.0	%	Unchangea ble
LD-20	0x9D14	Output of floating-point MULTIPLY/ DIVIDE module C	0.0% to 6553.5%	0.0	%	Unchangea ble
LD-21	0x9D15	Output of floating-point MULTIPLY/ DIVIDE module D	0.0% to 6553.5%	0.0	%	Unchangea ble
LD-22	0x9D16	Output of floating-point MULTIPLY/ DIVIDE module E	0.0% to 6553.5%	0.0	%	Unchangea ble
LD-23	0x9D17	Output of floating-point filter module A	0.0% to 6553.5%	0.0	%	Unchangea ble
LD-24	0x9D18	Output of floating-point filter module B	0.0% to 6553.5%	0.0	%	Unchangea ble
LD-25	0x9D19	Output of floating-point filter module C	0.0% to 6553.5%	0.0	%	Unchangea ble
LD-26	0x9D1A	Output of floating-point filter module D	0.0% to 6553.5%	0.0	%	Unchangea ble
LD-27	0x9D1B	Output of floating-point limiting module A	0.0% to 6553.5%	0.0	%	Unchangea ble
LD-28	0x9D1C	Output of floating-point limiting module B	0.0% to 6553.5%	0.0	%	Unchangea ble
LD-29	0x9D1D	Output of floating-point limiting module C	0.0% to 6553.5%	0.0	%	Unchangea ble
LD-30	0x9D1E	Output of floating-point limiting module D	0.0% to 6553.5%	0.0	%	Unchangea ble
LD-31	0x9D1F	Output of word-to-floating point module A	0.0% to 6553.5%	0.0	%	Unchangea ble
LD-32	0x9D20	Output of word-to-floating point module B	0.0% to 6553.5%	0.0	%	Unchangea ble
LD-33	0x9D21	Output of word-to-floating point module C	0.0% to 6553.5%	0.0	%	Unchangea ble

Para.	Comm. Addr.	Name	Reference	De fault	Unit	Change
LD-34	0x9D22	Output of word-to-floating point module D	0.0% to 6553.5%	0.0	%	Unchangeable
LD-35	0x9D23	Output of DWord-to-floating point module A	0.0% to 6553.5%	0.0	%	Unchangeable
LD-36	0x9D24	Output of DWord-to-floating point module B	0.0% to 6553.5%	0.0	%	Unchangeable
LD-37	0x9D25	Output of DWord-to-floating point module C	0.0% to 6553.5%	0.0	%	Unchangeable
LD-38	0x9D26	Output of DWord-to-floating point module D	0.0% to 6553.5%	0.0	%	Unchangeable
LD-39	0x9D27	Force value of motor-driven potentiometer	0.0% to 6553.5%	0.0	%	Unchangeable
LD-40	0x9D28	Reset value of motor-driven potentiometer	0.0% to 6553.5%	0.0	%	Unchangeable
LD-41	0x9D29	Maximum value of motor-driven potentiometer	0.0% to 6553.5%	0.0	%	Unchangeable
LD-42	0x9D2A	Minimum value of motor-driven potentiometer	0.0% to 6553.5%	0.0	%	Unchangeable
LD-43	0x9D2B	Initial value of motor-driven potentiometer	0.0% to 6553.5%	0.0	%	Unchangeable
LD-44	0x9D2C	Process operation output value of motor-driven potentiometer	0.0% to 6553.5%	0.0	%	Unchangeable
LD-45	0x9D2D	Final output value of motor-driven potentiometer	0.0% to 6553.5%	0.0	%	Unchangeable
LD-46	0x9D2E	Output of multi-point curve module A	0.0% to 6553.5%	0.0	%	Unchangeable
LD-47	0x9D2F	Output of multi-point curve module B	0.0% to 6553.5%	0.0	%	Unchangeable
LD-48	0x9D30	Multi-reference selection output	0.0% to 6553.5%	0.0	%	Unchangeable

Para.	Comm. Addr.	Name	Reference	De fault	Unit	Change
LD-49	0x9D31	Multi-reference 1 output	0.0% to 6553.5%	0.0	%	Unchangea ble
LD-50	0x9D32	Multi-reference 2 output	0.0% to 6553.5%	0.0	%	Unchangea ble
LD-51	0x9D33	Multi-reference 3 output	0.0% to 6553.5%	0.0	%	Unchangea ble
LD-52	0x9D34	Multi-reference 4 output	0.0% to 6553.5%	0.0	%	Unchangea ble
LD-53	0x9D35	Multi-reference 5 output	0.0% to 6553.5%	0.0	%	Unchangea ble
LD-54	0x9D36	Multi-reference 6 output	0.0% to 6553.5%	0.0	%	Unchangea ble
LD-55	0x9D37	Multi-reference 7 output	0.0% to 6553.5%	0.0	%	Unchangea ble
LD-56	0x9D38	Multi-reference 8 output	0.0% to 6553.5%	0.0	%	Unchangea ble
LD-57	0x9D39	Multi-reference 9 output	0.0% to 6553.5%	0.0	%	Unchangea ble
LD-58	0x9D3A	Multi-reference 10 output	0.0% to 6553.5%	0.0	%	Unchangea ble
LD-59	0x9D3B	Multi-reference 11 output	0.0% to 6553.5%	0.0	%	Unchangea ble
LD-60	0x9D3C	Multi-reference 12 output	0.0% to 6553.5%	0.0	%	Unchangea ble
LD-61	0x9D3D	Multi-reference 13 output	0.0% to 6553.5%	0.0	%	Unchangea ble
LD-62	0x9D3E	Multi-reference 14 output	0.0% to 6553.5%	0.0	%	Unchangea ble
LD-63	0x9D3F	Multi-reference 15 output	0.0% to 6553.5%	0.0	%	Unchangea ble
LD-64	0x9D40	Multi-reference 16 output	0.0% to 6553.5%	0.0	%	Unchangea ble
LD-65	0x9D41	Per-unit constant value 1	0.0% to 6553.5%	0.0	%	Unchangea ble
LD-66	0x9D42	Per-unit constant value 2	0.0% to 6553.5%	0.0	%	Unchangea ble
LD-67	0x9D43	Per-unit constant value 3	0.0% to 6553.5%	0.0	%	Unchangea ble
LD-68	0x9D44	Per-unit constant value 4	0.0% to 6553.5%	0.0	%	Unchangea ble
LD-69	0x9D45	Per-unit constant value 5	0.0% to 6553.5%	0.0	%	Unchangea ble
LD-70	0x9D46	Per-unit constant value 6	0.0% to 6553.5%	0.0	%	Unchangea ble

Para.	Comm. Addr.	Name	Reference	Default	Unit	Change
LD-71	0x9D47	Per-unit constant value 7	0.0% to 6553.5%	0.0	%	Unchangeable
LD-72	0x9D48	Per-unit constant value 8	0.0% to 6553.5%	0.0	%	Unchangeable
LD-73	0x9D49	Per-unit constant value 9	0.0% to 6553.5%	0.0	%	Unchangeable
LD-74	0x9D4A	Per-unit constant value 10	0.0% to 6553.5%	0.0	%	Unchangeable
LD-75	0x9D4B	Per-unit constant value 11	0.0% to 6553.5%	0.0	%	Unchangeable
LD-76	0x9D4C	Per-unit constant value 12	0.0% to 6553.5%	0.0	%	Unchangeable
LD-77	0x9D4D	Per-unit constant value 13	0.0% to 6553.5%	0.0	%	Unchangeable
LD-78	0x9D4E	Per-unit constant value 14	0.0% to 6553.5%	0.0	%	Unchangeable
LD-79	0x9D4F	Per-unit constant value 15	0.0% to 6553.5%	0.0	%	Unchangeable
LD-80	0x9D50	Per-unit constant value 16	0.0% to 6553.5%	0.0	%	Unchangeable
LD-81	0x9D51	Per-unit constant value 17	0.0% to 6553.5%	0.0	%	Unchangeable
LD-82	0x9D52	Per-unit constant value 18	0.0% to 6553.5%	0.0	%	Unchangeable
LD-83	0x9D53	Per-unit constant value 19	0.0% to 6553.5%	0.0	%	Unchangeable
LD-84	0x9D54	Per-unit constant value 20	0.0% to 6553.5%	0.0	%	Unchangeable
LD-85	0x9D55	Per-unit constant value 21	0.0% to 6553.5%	0.0	%	Unchangeable
LD-86	0x9D56	Updown offset	0.0% to 6553.5%	0.0	%	Unchangeable
LD-87	0x9D57	Percentage of current length relative to target length	0.0% to 6553.5%	0.0	%	Unchangeable
LD-88	0x9D58	Percentage of current count value relative to target count value	0.0% to 6553.5%	0.0	%	Unchangeable
LD-89	0x9D59	Percentage of AO1 value written through communication	0.0% to 6553.5%	0.0	%	Unchangeable

Para.	Comm. Addr.	Name	Reference	Default	Unit	Change
LD-90	0x9D5A	Percentage of AO2 value written through communication	0.0% to 6553.5%	0.0	%	Unchangeable
LD-91	0x9D5B	Percentage of HDO value written through communication	0.0% to 6553.5%	0.0	%	Unchangeable
LD-92	0x9D5C	Current value based on the maximum 1000 A per-unit value	0.0% to 6553.5%	0.0	%	Unchangeable
LD-93	0x9D5D	Voltage value based on the maximum 1000 V per-unit value	0.0% to 6553.5%	0.0	%	Unchangeable
LD-94	0x9D5E	AO output torque absolute value output	0.0% to 6553.5%	0.0	%	Unchangeable
LD-95	0x9D5F	AO output torque (–200.0% to +200.0%)	0.0% to 6553.5%	0.0	%	Unchangeable

19011712A00

Copyright © Shenzhen Inovance Technology Co., Ltd.

Shenzhen Inovance Technology Co., Ltd.

www.inovance.com

Add.: Inovance Headquarters Tower, High-tech Industrial Park, Guanlan Street, Longhua New District, Shenzhen

Tel: (0755) 2979 9595 Fax: (0755) 2961 9897

Suzhou Inovance Technology Co., Ltd.

www.inovance.com

Add.: No. 16 Youxiang Road, Yuexi Town, Wuzhong District, Suzhou 215104, P.R. China

Tel: (0512) 6637 6666 Fax: (0512) 6285 6720