INOVANCE

FORWARD, ALWAYS PROGRESSING

MD600 Series Basic AC Drive

Quick Start Guide

Industrial Automation

Intelligent Elevator

New Energy Vehicle

Industrial Robot

Rail Transit

Data code 19012337A01

Preface

About This Guide

The MD600 series is a basic general-purpose AC drive that is compact, easy to use, energy-saving, and harsh environment resistant. It is mainly used to control and adjust speed of three-phase AC asynchronous motors. The drive is suitable for industries such as the crystalline silicon, lithium battery, carpentry, logistics, food and beverage, cable, machine tool, and packaging.

This guide describes the installation and operation, common faults and troubleshooting, and parameter settings of the drive.

More Data

The following figure and table describe document codes and document introduction of the drive.

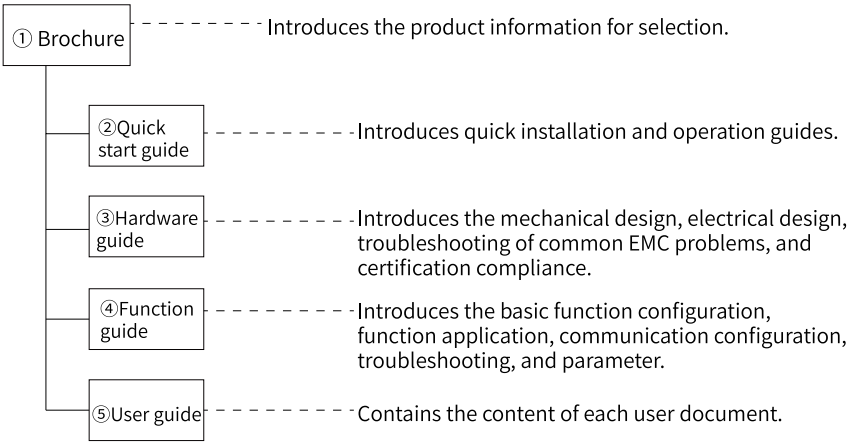

No.	Name	Document Code	Description
①	MD600 Series Basic AC Drive	19120393	This guide describes the product positioning, highlights, application scenarios, and selection specifications of the drive.
②	MD600 Series Basic AC Drive Quick Start Guide	19012337	This guide describes the installation and operation, common faults and troubleshooting, and parameter settings of the drive.
③	MD600 Series Basic AC Drive Hardware Guide	19012234	This guide describes product selection, mechanical design, electrical design, common EMC problems and solutions, and product certifications and standards.

No.	Name	Document Code	Description
④	MD600 Series Basic AC Drive Function Guide	19012238	This guide describes the basic function configuration, function application, communication configuration, troubleshooting, and parameters of the drive.
⑤	MD600 Series Basic AC Drive User Guide	PS00012434	This guide describes product selection, mechanical design, electrical design, quick installation and operation, function application, communication configuration, troubleshooting, common EMC problems and solutions, and product certifications and standards.

Revision History

Date	Version	Description
March 2024	A01	Added information about 5.5 kW models. Added information about the MD-BP-M to common function parameters. Made minor corrections. The document version corresponds to the following software version: A02.08 A2-22=L60.02/A2-23=L61.02/A2-24=000.18/A2-25=000.22. Note: The MD600 software version must be A2-22 = 60.02/A2-23 = 61.02/A2-24 = 0.28/A2-25 = 0.31 and above to support the MD-BP-M. If the current MD600 software version does not support the MD-BP-M function, contact the service personnel of the manufacturer to upgrade the software
December 2023	A00	First release. The document version corresponds to the following software version: A02.07 A2-22=L60.02/A2-23=L61.02/A2-24=000.18/A2-25=000.22.

Access to the Guide

This guide is not delivered with the product. You can obtain the PDF version by the following methods:

- Do keyword search under **Service and Support** at *http://www.inovance.com*.
- Scan the QR code on the product with your smart phone.
- Scan the QR code below to install the app, where you can search for and download manuals.

Warranty Disclaimer

Inovance provides warranty service within the warranty period (as specified in your order) for any fault or damage that is not caused by improper operation of the user. Maintenance will be charged after the warranty period expires.

Within the warranty period, maintenance fee will be charged for the following damage:

- Damage caused by operations not following the instructions in the user guide
- Damage caused by fire, flood, or abnormal voltage
- Damage caused by unintended use of the product
- Damage caused by use beyond the specified scope of application of the product
- Damage or secondary damage caused by force majeure (natural disaster, earthquake, and lightning strike)

The maintenance fee is charged according to the latest Price List of Inovance. If otherwise agreed upon, the terms and conditions in the agreement shall prevail.

For details, see Product Warranty Card.

Table of Contents

Preface 1
Fundamental Safety Instructions 5
1 Shipment Check 12
2 Power Supply Compatibility Check 13
3 Unpacking and Handling 14
4 AC Drive Installation 16
4.1 Pre-installation Inspection 16
4.2 Backplate Mounting 16
4.3 Guide Rail Installation 17
4.4 Post-installation Inspection 18
5 AC Drive Wiring 19
5.1 Pre-wiring Inspection 19
5.2 Main Circuit Wiring 19
5.3 Control Circuit Wiring 20
5.4 Post-wiring Inspection 21
6 Quick Operation 23
6.1 Operating Panel 23
6.1.1 Components 23
6.1.2 Parameter Settings and View 25
6.2 Inspection Before Power-on 27
6.3 Operation upon Initial Power-on 28
6.3.1 Basic Commissioning Flowchart 28
6.3.2 Power-on 30
6.3.3 Restoring Parameters to Default Settings 30
6.3.4 Checking Software Versions 31
6.3.5 Setting Motor Parameters 32
6.3.6 Performing Motor Parameter Auto-tuning 33
6.3.7 Setting the Command Source 35
6.3.8 Setting the Frequency Source 36
6.3.9 Setting the Acceleration/Deceleration Time 44
6.3.10 Setting Stop Mode Parameters 46
7 Troubleshooting 49
8 Common Parameter Settings 54

Fundamental Safety Instructions

Safety Precautions

- This chapter provides essential safety instructions for proper use of the equipment. Before operating the equipment, read through the guide and comprehend all the safety instructions. Failure to observe the safety precautions may result in serious injuries or death of personnel or device damage.
- "Danger", "Warning", and "Caution" items in this guide do not indicate all safety precautions that need to be followed; instead, they just supplement the safety precautions.
- Use this product in an environment that complies with the design specifications. Malfunction or component damage caused by improper usage is not covered by warranty.
- Inovance shall take no responsibility for any personal injuries or property damage caused by improper usage.

Safety Levels and Definitions

DANGER Indicates that failure to comply with the notice can result in death or severe personal injuries.

WARNING Indicates that failure to comply with the notice may result in death or severe personal injuries.

CAUTION Indicates that failure to comply with the notice may result in minor or moderate personal injuries or equipment damage.

General Safety Instructions

- Drawings in the guide are sometimes shown without covers or protective guards. Remember to install the covers or protective guards as specified first, and then perform operations in accordance with the instructions.
- The drawings in the guide are shown for illustration only and may be different from the product you purchased.
- Operators must take mechanical precautions to protect personal safety and wear protective equipment, such as anti-smashing shoes, safety clothing, safety glasses, protective gloves, and protective sleeves.

Unpacking
WARNING • Do not install the equipment if you find damage, rust, or signs of use on the equipment or accessories upon unpacking. • Do not install the equipment if you find water seepage or missing or damaged components upon unpacking. • Do not install the equipment if you find the packing list does not conform to the equipment you received.
CAUTION • Check whether the packing is intact and whether there is damage, water seepage, dampness, and deformation before unpacking. • Unpack the package by following the unpacking sequence. Do not strike the package violently. • Check whether there is damage, rust, or injuries on the surface of the equipment and equipment accessories before unpacking. • Check whether the package contents are consistent with the packing list before unpacking.
Storage and Transportation
WARNING • Large-scale or heavy equipment must be transported by qualified professionals using specialized hoisting equipment. Failure to comply may result in personal injuries or equipment damage. • Before hoisting the equipment, ensure the equipment components such as the front cover and terminal blocks are secured firmly with screws. Loosely-connected components may fall off and result in personal injuries or equipment damage. • Never stand or stay below the equipment when the equipment is being hoisted by the hoisting equipment. • When hoisting the equipment with a steel rope, ensure the equipment is hoisted at a constant speed without suffering from vibration or shock. Do not turn the equipment over or let the equipment stay hanging in the air. Failure to comply may result in personal injuries or equipment damage.

CAUTION

- Handle the equipment with care during transportation and mind your steps to prevent personal injuries or equipment damage.
- When carrying the equipment with bare hands, hold the equipment casing firmly with care to prevent parts from falling. Failure to comply may result in personal injuries.
- Store and transport the equipment based on the storage and transportation requirements. Failure to comply can result in equipment damage.
- Avoid storing or transporting the equipment in environments with water splash, rain, direct sunlight, strong electric field, strong magnetic field, and strong vibration.
- Avoid storing the product for more than 3 months. When the product needs to be stored for an extended period, take more strict protection and necessary inspection.
- Pack the equipment strictly before transportation. Use a sealed box for long-distance transportation.
- Never transport the equipment with other equipment or materials that may harm or have negative impacts on this equipment.

Installation

DANGER

- The equipment must be operated only by professionals with electrical knowledge. Non-professionals are not allowed.

WARNING

- Read through the guide and safety instructions before installation.
- Do not install this equipment in places with strong electric or magnetic fields.
- Before installation, check that the mechanical strength of the installation site can bear the weight of the equipment. Failure to comply can result in mechanical hazards.
- Do not wear loose clothes or accessories during installation. Failure to comply may result in an electric shock.
- When installing the equipment in a closed environment (such as a cabinet or casing), use a cooling device (such as a fan or air conditioner) to cool the environment down to the required temperature. Failure to comply may result in equipment over-temperature or a fire.
- Do not retrofit the equipment.
- Do not fiddle with the bolts used to fix equipment components or the bolts marked in red.
- When this product is installed in a cabinet or terminal equipment, protective measures such as a fireproof enclosure, electrical enclosure, or mechanical enclosure must be provided. The IP rating must meet IEC standards and local laws and regulations.
- Before installing equipments with strong electromagnetic interference, such as a transformer, install a shielding equipment for the equipment to prevent malfunction.
- Install the product on an incombustible object such as metal and do not contact or attach the product with combustible objects. Failure to comply will cause fires.

CAUTION

- Cover the top of the equipment with a piece of cloth or paper during installation. This is to prevent unwanted objects such as metal chippings, oil, and water from falling into the equipment and causing faults. After installation, remove the cloth or paper on the top of the equipment to prevent over-temperature caused by poor ventilation due to blocked ventilation holes.
- Resonance may occur when the equipment operating at a constant speed executes variable speed operations. In this case, install the vibration-proof rubber under the motor frame or use the vibration suppression function to reduce resonance.

Wiring

DANGER

- Equipment installation, wiring, maintenance, inspection, or parts replacement must be performed only by professionals.
- Before wiring, cut off all the power supplies of the equipment, and wait for at least the time designated on the equipment warning label before further operations because residual voltage still exists after power-off. Measure the direct voltage of the main circuit and ensure that the voltage is within the safety range. Failure to comply will result in an electric shock.
- Do not perform wiring, remove the equipment cover, or touch the circuit board with power ON. Failure to comply will result in an electric shock.
- Check that the equipment is grounded properly. Failure to comply can result in an electric shock.

WARNING

- Do not connect the input power supply to the output end of the equipment. Failure to comply can result in equipment damage or even a fire.
- When connecting a drive to the motor, check that the phase sequences of the drive and motor terminals are consistent to prevent reverse motor rotation.
- Ensure that the cables used for wiring meet the diameter, shielding, and other relevant requirements, and that the shielding layer of the shielded cables is reliably grounded at a single terminal.
- After wiring is done, check that all cables are connected properly and no screws, washers or exposed cables are left inside the equipment. Failure to comply may result in an electric shock or equipment damage.

CAUTION

- Follow the proper electrostatic discharge (ESD) procedure and wear an anti-static wrist strap to perform wiring. Failure to comply may result in damage to the equipment or to the internal circuit of the product.
- Use shielded twisted pairs for the control circuit. Connect the shield to the grounding terminal of the equipment for grounding purpose. Failure to comply will result in equipment malfunction.

Power-on

DANGER

- Before power-on, check that the equipment is installed properly with reliable wiring and the motor can be restarted.
- Check that the power supply meets equipment requirements before power-on to prevent equipment damage or a fire.
- Do not open the cabinet door or protective cover of the product, contact any wiring terminal of the product, or remove any part of the product at power-on. Failure to comply will result in an electric shock.

WARNING

- Perform a trial run after wiring and parameter setting to ensure the equipment operates safely. Failure to comply may result in personal injuries or equipment damage.
- Before power-on, check that the rated voltage of the equipment is consistent with that of the power supply. If the power supply voltage is used incorrectly, a fire accident may occur.
- Before power-on, check that no one is near the equipment, motor, or machine. Failure to comply may result in death or personal injuries.

Operation

DANGER

- The equipment must be operated only by professionals. Failure to comply can result in death or personal injury.
- Do not touch any connecting terminals or disassemble any unit or component of the equipment during operation. Failure to comply can result in an electric shock.

WARNING

- Do not touch the equipment casing, fan, or resistor with bare hands to feel the temperature. Failure to comply may result in personal injuries.
- Prevent metal or other objects from falling into the equipment during operation. Failure to comply may result in a fire or equipment damage.

Maintenance

DANGER

- Equipment installation, wiring, maintenance, inspection, or parts replacement must be performed only by professionals.
- Do not maintain the equipment with power on. Failure to comply can result in an electric shock.
- Before maintenance, cut off all the power supplies of the equipment and wait for at least the time designated on the equipment warning label.
- In case of a permanent magnet motor, do not touch the motor terminals immediately after power-off because the motor terminals will generate induced voltage during rotation even after the equipment power supply is off. Failure to comply will result in an electric shock.

WARNING

- Perform routine and periodic inspection and maintenance on the equipment according to maintenance requirements and keep a maintenance record.

Repair

DANGER

- Equipment installation, wiring, maintenance, inspection, or parts replacement must be performed only by professionals.
- Do not repair the equipment with power on. Failure to comply can result in an electric shock.
- Before inspection and repair, cut off all the power supplies of the equipment and wait for at least the time designated on the equipment warning label.

WARNING

- Submit the repair request according to the warranty agreement.
- When the fuse is blown or the circuit breaker or earth leakage current breaker (ELCB) trips, wait for at least the time designated on the equipment warning label before power-on or further operations. Failure to comply may result in death, personal injury or equipment damage.
- When the equipment is faulty or damaged, the troubleshooting and repair work must be performed by professionals that follow the repair instructions, with repair records kept properly.
- Replace quick-wear parts of the equipment according to the replacement instructions.
- Do not use damaged equipment. Failure to comply may result in death, personal injury, or severe equipment damage.
- After the equipment is replaced, check the wiring and set parameters again.

Disposal

WARNING

- Dispose of retired equipment in accordance with local regulations and standards. Failure to comply may result in property damage, personal injury, or even death.
- Recycle retired equipment by observing industry waste disposal standards to avoid environmental pollution.

Safety label

For safe equipment operation and maintenance, comply with the safety labels on the equipment. Do not damage or remove the safety labels. See the following table for descriptions of the safety labels.

Safety Label	Description
	• Read through the safety instructions before operating the equipment. Failure to comply may result in death, personal injuries, or equipment damage. • Do not touch the terminals or remove the cover with power ON or within 10 min after power-off. Failure to comply will result in an electric shock.

1 Shipment Check

Procedure

1. Open the package and check whether the drive is intact.

Warning

If the AC drive or other accessories are damaged, do not operate or install the damaged device.

2. Check whether the drive model is consistent with that on the delivery order.

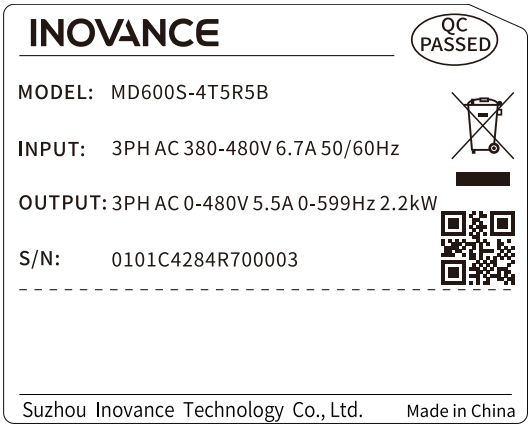

3. Record the model and serial No.

2 Power Supply Compatibility Check

Check and ensure that the voltage of the mains power is compatible with the voltage of the AC drive power supply.

The following table describes the AC drive models and power supply voltage.

Table 2–1 AC drive models and power supply voltage

AC Drive Model (Three-Phase 380 V to 480 V)	AC Drive Model (Single-Phase 200 V to 240 V)
MD600S/A-4T1R6 MD600S/A-4T2R3 MD600S/A-4T4R8 MD600S/A-4T5R5B MD600S/A-4T9R5B MD600S/A-4T013B	MD600S/A-2S2R8 MD600S/A-2S4R6 MD600S/A-2S7R5B MD600S/A-2S010B

Note MD600S indicates the RS485 model, and MD600A indicates the CAN model.

3 Unpacking and Handling

Unpacking

1. Open the package of the AC drive (①).
2. Take out the cushion (②).
3. Take out the AC drive (③) and the accessory kit (④).

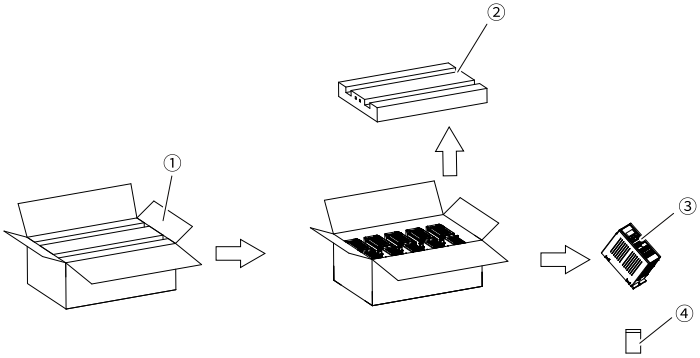

Figure 3-1 AC drive unpacking

Table 3–1 Unpacking list

No.	Name
①	AC drive package
②	Cushion
③	MD600 AC drive
④	Accessory kit

Storage

Caution

Store and transport the equipment as required to prevent damage.

- The drive must be stored in a clean and dry room, where the temperature ranges from -20°C and +60°C and temperature change rate is smaller than 1°C/min.
- Avoid storing or transporting the drive in the environment with water splash, rain, direct sunlight, strong electric field, strong magnetic field, and strong vibration.
- Do not expose the drive to the environment with moisture, high temperature, or strong sunlight for a long time.

- If the drive needs to be stored for a long period of time, cover it or take other appropriate measures to keep it from contamination and environmental influences.
- To store the drive, pack the drive with the original packing box provided by Inovance.
- Avoid storing the product for more than 3 months. When the product needs to be stored for an extended period, take more strict protection and necessary inspection.
- The electrolytic capacitor will deteriorate after long-term storage. Therefore, switch on the AC drive once for at least 5 hours every 6 months. Increase the input voltage slowly to the rated value by using a voltage regulator. Contact Inovance for technical support if necessary.
- Pack the drive strictly before transportation. Use a sealed box for long-distance transportation.
- Never transport the equipment with other equipment or materials that may harm or have negative impacts on this equipment.

Transportation

Danger

- Large-scale or heavy equipment must be transported by qualified professionals using specialized hoisting equipment. Failure to comply may result in personal injuries or equipment damage.
- Before hoisting the equipment, ensure the components such as the front cover and terminal block are secured firmly with screws. Loosely-connected components may fall off and result in personal injuries or equipment damage.
- Never stand or stay below the equipment when the equipment is being hoisted by the hoisting equipment.
- When hoisting the equipment with a steel rope, ensure the equipment is hoisted at a constant speed without suffering from vibration or shock. Do not turn the equipment over or let the equipment stay hanging in the air. Failure to comply may result in personal injuries or equipment damage.
- When carrying the equipment with bare hands, hold the equipment casing firmly with care to prevent parts from falling. Failure to comply may result in personal injuries.
- Handle the equipment with care during transportation and mind your steps to prevent personal injuries or equipment damage.

4 AC Drive Installation

4.1 Pre-installation Inspection

Complete the following inspection items before installation.

Table 4–1 Pre-inspection checklist

No.	Item	Checked
1	The installation position is mechanically strong enough to bear the weight of the AC drive.	☐
2	The load-bearing capacity of the ground and the environment meet the installation requirements.	☐
3	Sufficient clearance is reserved for heat dissipation, including for heat dissipation of other devices in the cabinet.	☐
4	The mounting bracket (if needed) is made of flame-retardant material.	☐
5	If the application site is exposed to metal dust, install the drive in an enclosed cabinet to isolate the drive from the metal dust. In this case, the space inside the cabinet needs to be as large as possible.	☐
6	Before installing the AC drive, install the bottom mounting bracket in the cabinet and guide rails (optional), and prepare mounting beams with holes reserved to fix the AC drive.	☐
7	No flammables or explosives are placed near the drive.	☐

4.2 Backplate Mounting

T1 models (three-phase 380-480 V: 0.37-2.2 kW; single-phase 200-240 V: 0.37-1.5 kW) and T2 models (three-phase 380-480 V: 4-5.5 kW; single-phase 200-240 V: 2.2 kW) support backplate mounting.

Prerequisites

Before installation, check that the installation tools and environment have been prepared. For details, see "Mechanical Design" in the *MD600 Series Basic AC Drive Hardware Guide*. This section describes quick backplate mounting steps.

Procedure

1. Use a Phillips screwdriver to secure the M4x12 cross recessed pan head SEMS screw (with the flat washer and spring washer) on the upper right side of the drive, as shown in ①.
2. Repeat the previous step to fix the screw below the drive, as shown in ②.

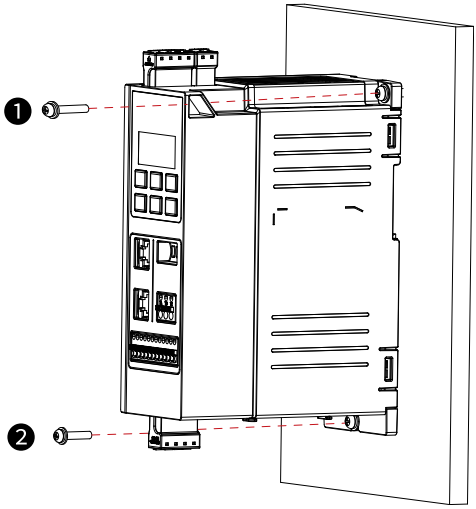

4.3 Guide Rail Installation

Install the guide rail for T1 models (three-phase 380-480 V: 0.37-2.2 kW; single-phase 200-240 V: 0.37-1.5 kW). For T2 models (three-phase 380-480 V: 4-5.5 kW; single-phase 200-240 V: 2.2 kW), the guide rail is not required.

Prerequisites

- To install the AC drive with the guide rail, prepare the DIN guide rail (option). For details, see "List of Options" in *MD600 Series Basic AC Drive Hardware Guide*.
- Before installation, check that the installation tools and environment have been prepared. For details, see "Mechanical Design" in the *MD600 Series Basic AC Drive Hardware Guide*. This section describes quick guide rail steps.

Procedure

1. Insert the guide rail latch into the slot at the bottom of the drive until it clicks into place, as shown in ①.
   Figure ② shows that the guide rail is installed in place.
   Scenario 1: The guide rail is not installed in the cabinet.
2. Use the straight screwdriver to pull the guide rail latch up slightly, as shown in ③.
3. Install the guide rail to the snap-fit joint on the drive, as shown in ④.
4. Press the guide rail latch down to the place to lock the guide rail, as shown in ⑤.
   Scenario 2: The guide rail is installed in the cabinet.
5. Hold the drive at the fixing position, push the bottom of the drive in the direction of the arrow to the place to lock it to the snap-fit joint, as shown in ⑥.
6. Press the guide rail latch down to the place to lock the guide rail, as shown in ⑦.

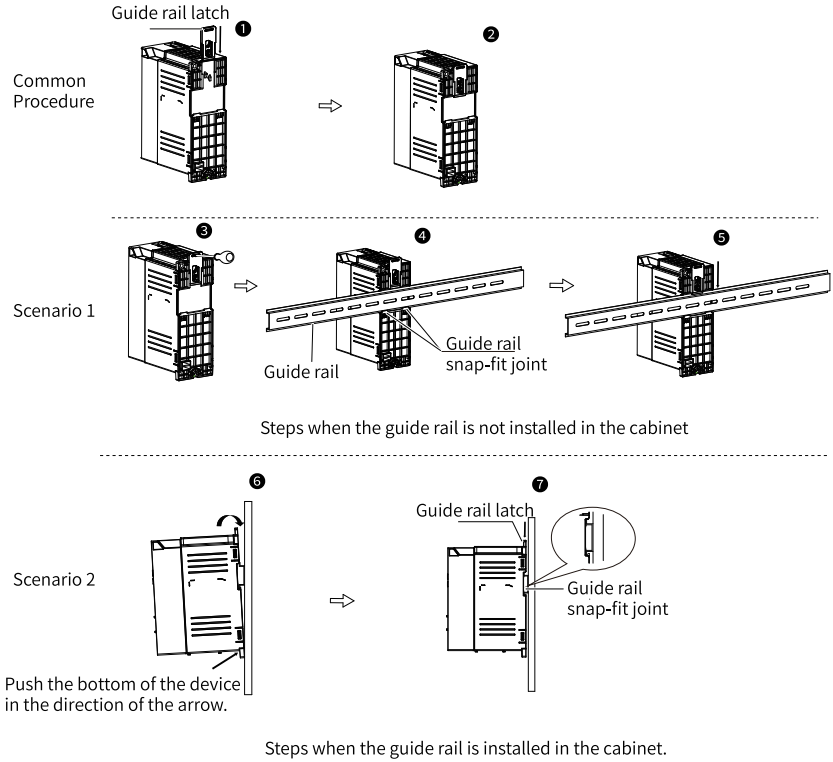

Figure 4-1 Guide rail installation

4.4 Post-installation Inspection

After the installation is done, check the following items.

Table 4–2 Post-installation checklist

No.	Item	Checked
1	The ceiling height meets the minimum requirements for smooth ventilation. The air inlet and air outlet are free of obstruction and have sufficient space. Sufficient space is reserved for safe passing when the cabinet door is opened.	☐
2	All contact protection devices (such as the guard plate) inside and outside the cabinet are installed.	☐

5 AC Drive Wiring

5.1 Pre-wiring Inspection

Complete the following inspection items before wiring.

Table 5–1 Pre-wiring inspection checklist

No.	Item	Checked
1	The diameter and shield of the cables used meet corresponding requirements.	☐
2	The device and the drive are grounded properly.	☐
3	Proper electrostatic discharge (ESD) procedures are followed and antistatic wrist straps are worn.	☐

5.2 Main Circuit Wiring

Context

For details on main circuit terminals, see "Electrical Design" in the *MD600 Series Basic AC Drive Hardware Guide*. This section describes quick main circuit wiring. The following procedure takes the CAN model as an example to introduce how to wire the main circuit.

Procedure

1. Ground the AC drive.
2. Check the rated value of the circuit breaker or fuse.
3. Check whether the rated motor voltage is compatible with the AC drive voltage.
4. Connect the AC drive to the motor.
5. Connect the AC drive to the mains power.

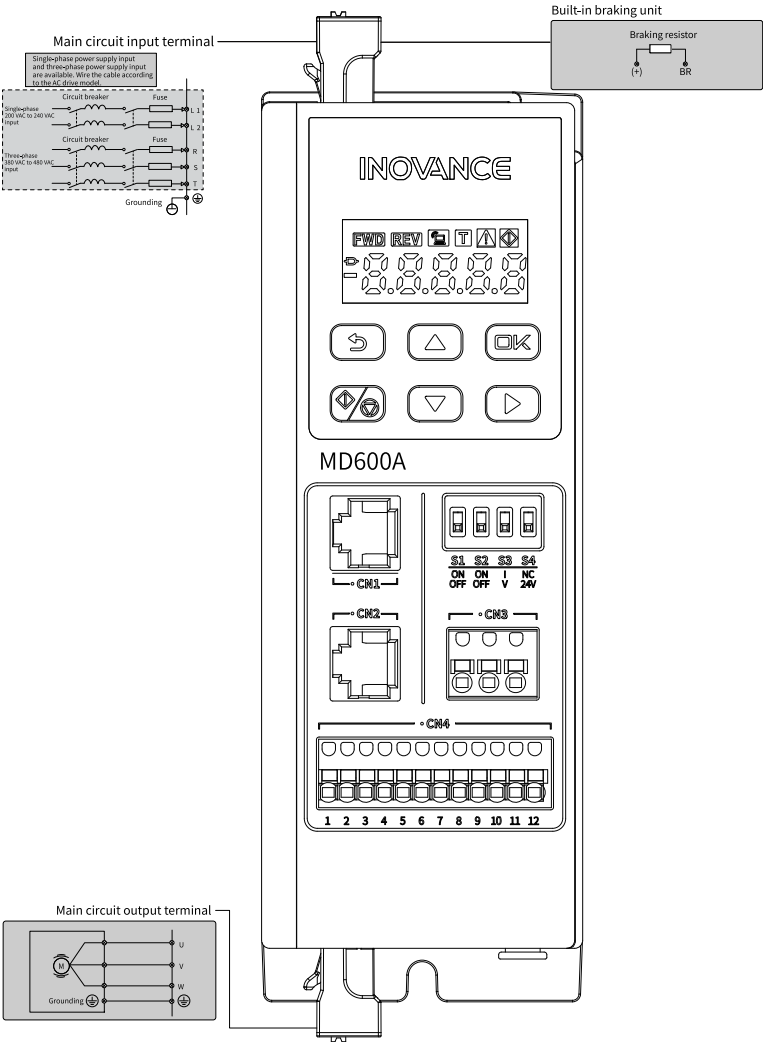

Figure 5-1 Main circuit wiring

5.3 Control Circuit Wiring

For details on control circuit terminals, see "Electrical Design" in the *MD600 Series Basic AC Drive Hardware Guide*. This section describes quick control circuit wiring. The following figure takes the CAN model as an example to introduce the control circuit wiring.

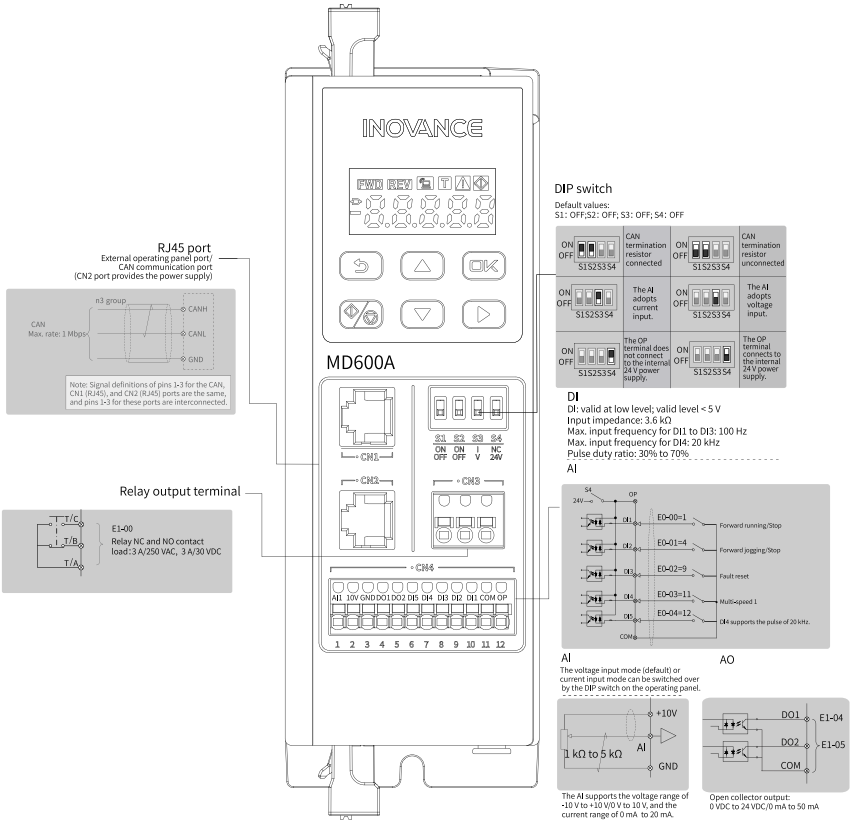

Figure 5-2 Control circuit wiring

5.4 Post-wiring Inspection

After wiring is completed, check the following items and tick compliant items.

Table 5–2 Post-wiring inspection checklist

No.	Item	Checked
1	The power supply input cables are connected to the R, S, and T terminals (three-phase 380 V) or L1 and L2 terminals (single-phase 220 V).	☐
2	The motor input cables are connected to the U, V, and W terminals.	☐
3	The dimensions of the main circuit cables meet the requirements.	☐
4	Heat-shrink tubes are applied to cable lug copper pipes and conductors of main circuit cables, and completely cover the cable conductors.	☐

No.	Item	Checked
5	The motor output cable does not exceed 50 m. Otherwise, the carrier frequency needs to be reduced through F0-15.	☐
6	The ground cables are connected correctly.	☐
7	The output terminals and control signal terminals are securely fastened.	☐
8	The braking resistor and braking unit (if used) are connected correctly and have proper resistance.	☐
9	The control circuit signal cables are shielded twisted pair cables.	☐
10	The control circuit cables and main circuit power cables are routed separately.	☐
11	There are no screws, gaskets, or exposed cables left inside the product.	☐

6 Quick Operation

6.1 Operating Panel

6.1.1 Components

The following figure describes the operating panel of the drive. For detailed descriptions, see the following table.

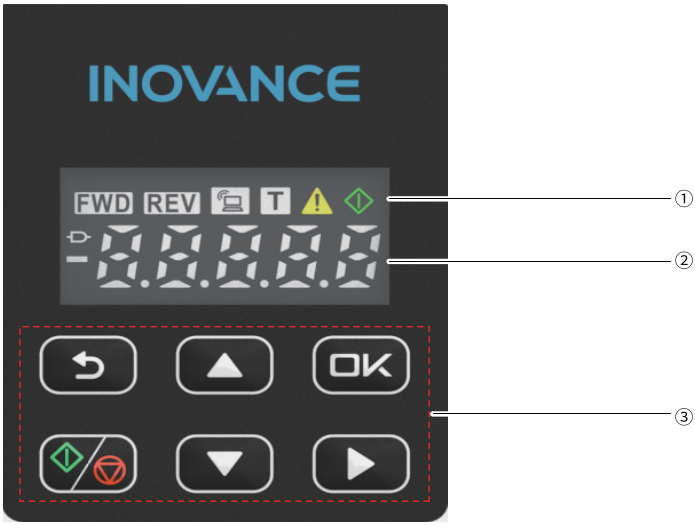

Figure 6-1 Operating panel

Table 6–1 Operating panel description

No.	Name	Description
①	Status display area	It displays the running state of the AC drive. For details, see *"Table 6–2 Status description" on page 24*.
②	Parameter display area	It displays the current parameter of the drive.
③	Key area	For details, see *"Table 6–3 Key descriptions" on page 24*.

Table 6–2 Status description

Symbol	Name	Function	Status
FWD	FWD	Forward running	Steady on: The AC drive is running forwardly or the forward running mode is set.
REV	REV	Reverse running	Steady on: The AC drive is running reversely or the reverse running mode is set.
	Local/remote	Local/remote connection mode	• Off: local control • Steady on: Terminal control • Flashing: Communication control • Flashing quickly: User-defined control mode
T	Torque control	Torque control mode	Steady on: Torque control mode Off: Speed control mode
	Alarm	Alarm state	Steady on: A fault or an alarm occurs.
	Running	Running status	Steady on: The AC drive is running. Off: The AC drive does not run.

Table 6–3 Key descriptions

Key	Name	Function
	Menu/Back key	In the monitoring interface, press the key to enter the parameter setting interface. In the parameter interface, press the key to return to the last interface or undo the operation. Long press the key to enter the multi-function menu.
OK	OK key	Press the key to enter the settings interface or confirm settings.
	Up key	In the monitoring interface, press the key to increase the value of the potentiometer. In the parameter interface, press the key to increase the parameter number.

Key	Name	Function
	Down key	In the monitoring interface, press the key to decrease the value of the potentiometer. In the parameter interface, press the key to decrease the parameter number.
	Shift key	In the monitoring interface, press the key to switch among monitoring objects. In the parameter interface, press the key to switch the operation position. In the multi-function menu interface, press the key to switch among the basic menu, user menu, calibration menu, and error record menu. In the error record menu, press the key to switch among historical fault records.
	Run/Stop	In the operating panel control mode, press the key to operate the drive. When the drive is running, press the key to stop the drive. When the drive is in the faulty state, press the key to perform a reset operation.

Caution

Do not repair or modify the AC drive by yourself. In case of any fault that cannot be rectified, contact the agent or Inovance for technical support.

6.1.2 Parameter Settings and View

Parameter settings

The operating panel provides three levels of menus for parameter settings. It consists of the following menus:

- Level-1 menu: parameter groups
- Level-2 menu: parameters
- Level-3 menu: parameter value settings

After entering each level of menu, you can modify the flashing digit by pressing , , and .

For example, to change the value of b5-01 from 50.00 Hz to 30.00 Hz, perform settings according to the following figure.

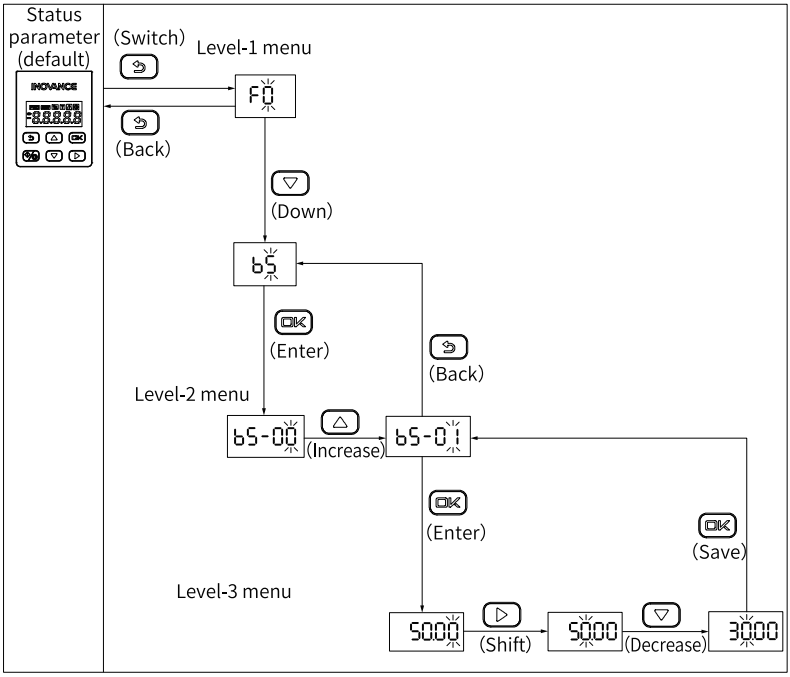

Figure 6-2 Parameter modification example

Parameter view

The following figure takes viewing the value of F1-03 as an example to describe how to view parameter values through the operating panel.

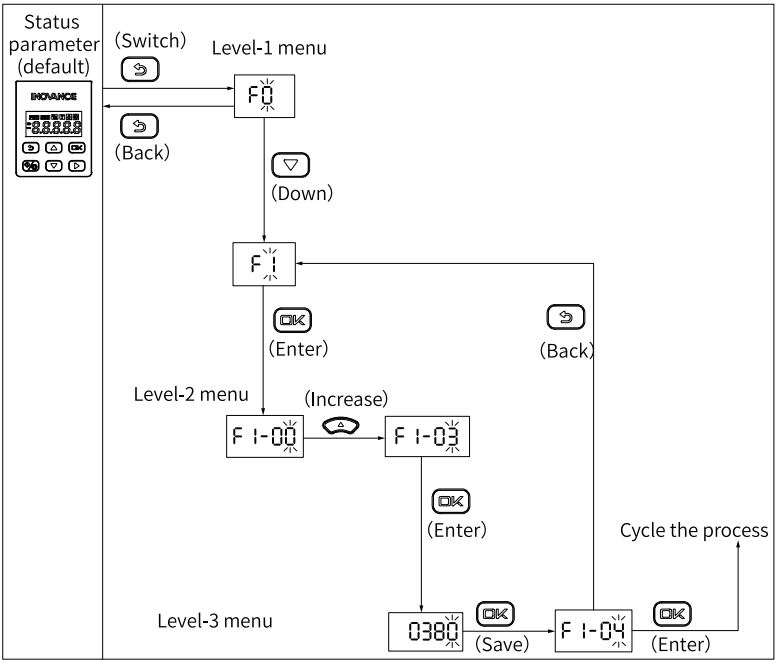

Figure 6-3 Parameter view example

6.2 Inspection Before Power-on

Warning

Check the following items before powering on the drive.

Check the following items before operating the drive and motor.

Table 6–4 Check items before power-on

No.	Item		Checked
1	Main circuit wiring	The power supply voltage is correct (three-phase 380–480 VAC, 50/60 Hz; single-phase 200-240 VAC, 50/60 Hz).	☐
2		The power supply input terminals and the AC drive input terminals (R/S/T or L1/L2) are connected properly. The power supply voltage is correct (three-phase 380–480 VAC, 50/60 Hz; single-phase 200-240 VAC, 50/60 Hz).	☐
3		The motor input terminals and the AC drive output terminals (U/V/W) are connected properly.	☐
4		The AC drive and motor are properly grounded.	☐
5		The dimensions of the main circuit cables meet the requirements.	☐
6		Heat-shrink tubes have been applied to the copper lugs and conductors of the main circuit cable and completely wrap the cable conductors.	☐
7		The motor output cable does not exceed 50 m. Otherwise, the carrier frequency needs to be reduced through A5-01.	☐
8	Control circuit wiring	The control circuit terminals are reliably connected to other control devices.	☐
9		The control circuit signal cables are shielded twisted pair cables.	☐
10		Optional cards are connected correctly.	☐
11		Control circuit cables and main circuit power cables are routed separately.	☐
12		The control circuit terminals of the AC drive are all in the OFF state (the AC drive is not running).	☐
13	Load	The motor is in the no-load state and is not connected to any mechanical system.	☐
14	Braking resistor	The braking resistor and braking unit (if have) with proper resistance are wired properly.	☐

6.3 Operation upon Initial Power-on

6.3.1 Basic Commissioning Flowchart

The following figure describes the basic commissioning flow of the AC drive.

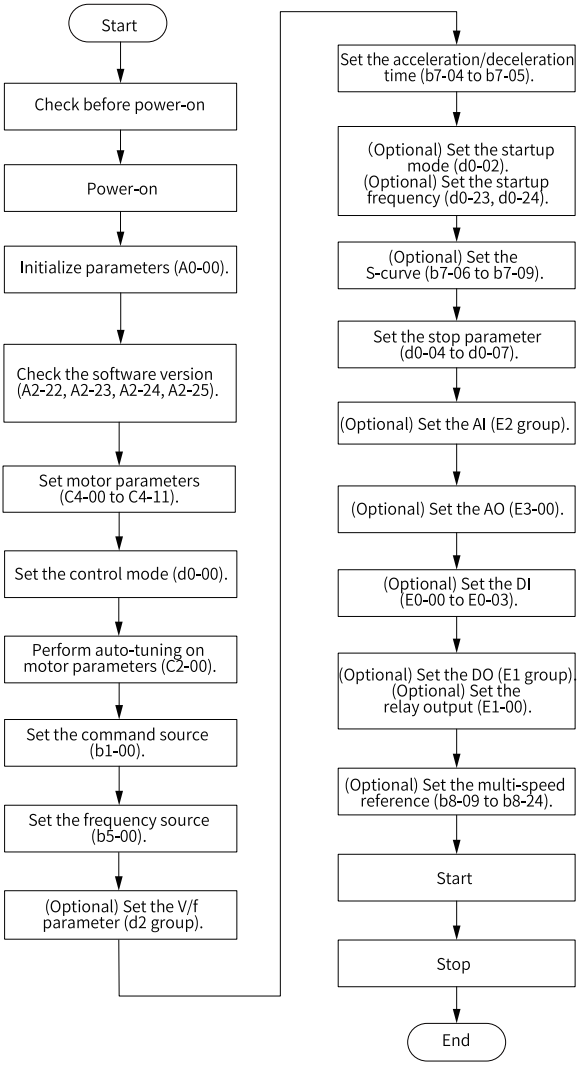

Figure 6-4 Basic commissioning flow

Note

The following section introduces the required commissioning steps aiming at quick commissioning.

6.3.2 Power-on

Close the power supply switch and check the display on the operating panel of the AC drive. If the operating panel displays 50.00, the AC drive is powered on.

Figure 6-5 Display on the operating panel upon power-on

6.3.3 Restoring Parameters to Default Settings

Set A0-00 to 3 to restore parameters to default settings. The following table describes parameter settings in details.

Parameter Code	Parameter Name	Default	Value Range	Description
A0-00	Parameter initialization	0	0: No operation 1: Restore parameters excluding motor parameters to default settings 2: Clear records 3: Restore parameters including motor parameters to default settings 4: Back up current user parameters 5: Clear fault information 501: Restore user backed-up parameters 503: Restore parameters including motor parameters to default settings and clear records	0: No operation 1: AC drive parameters except factory parameters, motor parameters, and records are restored to default settings. 2: Fault records, cumulative running time, cumulative power-on time, and cumulative power consumption are cleared. 3: AC drive parameters except factory parameters and records are restored to default settings. 4: The current parameter settings are backed up, which is the same as the function when A0-09 is set to 400. 5: Fault information is cleared. 501: Parameters backed up by setting A0-00 to 4 are stored, which is the same as the function when A0-08 is set to 500. 503: AC drive parameters except factory parameters are restored to default settings and records are cleared. Factory parameters include the model parameters, AI/AO correction parameters. Record information parameters include the fault record, cumulative running time, and cumulative power-on time.

6.3.4 Checking Software Versions

The product software version includes the performance software version and function software version. You can check the software version to ensure that it is consistent with the actual product version.

Parameter Code	Parameter Name	Value Range	Description
A2-22	Performance software version	0.00-655.35	This parameter displays the performance software version of the AC drive.
A2-23	Function software version	0.00-655.35	This parameter displays the function software version of the AC drive.

Parameter Code	Parameter Name	Value Range	Description
A2-24	Performance software sub-version	0.00-655.35	This parameter displays the temporary performance software version.
A2-25	Function software sub-version	0.00-655.35	This parameter displays the temporary function software version.

Note

Parameters in the preceding table cannot be changed.

6.3.5 Setting Motor Parameters

Set motor parameters according to the motor nameplate, including the rated motor power, voltage, current, frequency, and speed, motor power factor, maximum frequency, and minimum frequency.

Parameter Code	Parameter Name	Value Range	Description
C4-01	Rated motor power	0.1 kW to 1000.0 kW	The rated motor power indicates the axis output power of the motor working in rated conditions. Select a motor with a proper power rating on the premise that the motor can meet the requirements of mechanical load. Take the motor heat dissipation, allowable overload capacity, and starting capacity into account.
C4-03	Rated motor voltage	1 V to 2000 V	The rated motor voltage indicates the voltage of the motor during normal operation, which usually refers to the line voltage.
C4-04	Rated motor current	0.1 A to 6553.5 A	The rated motor current indicates the current of the motor during normal operation, which usually refers to the line current.
C4-06	Rated motor frequency	0.01 Hz to 599 Hz	The rated motor frequency indicates the frequency of the power supply connected to the stator winding under the rated operation conditions of the motor.
C4-07	Rated motor speed	1 RPM to 65535 RPM	The rated motor speed indicates the speed (r/min) of the rotor when the motor is running under rated conditions.

Parameter Code	Parameter Name	Value Range	Description
C4-09	Motor power factor	0.600-1.000	This parameter indicates the parameter power factor on the motor nameplate.
C4-10	Maximum motor frequency	C4-06 to 599.00 Hz	This parameter indicates the allowed maximum frequency of the motor.
C4-11	Minimum motor frequency	0.00 Hz to C4-10	This parameter indicates the allowed minimum frequency of the motor.

6.3.6 Performing Motor Parameter Auto-tuning

The procedure for motor parameter auto-tuning is as follows:

1. Enter motor nameplate parameters (C4-01 to C4-11) correctly. For details, see *"6.3.5 Setting Motor Parameters" on page 32*.
2. Set C2-00 to 1 (partial static auto-tuning of asynchronous motor).
3. Press the **OK** key. "TUNE" is displayed on the operating panel.

4. Press the **OK** key to start auto-tuning. When "50.00" is displayed, the auto-tuning is completed.

Then parameters C4-20 to C4-65 are obtained and written.

Parameter Code	Parameter Name	Default	Value Range	Description
C2-00	Auto-tuning selection	0	0: No auto-tuning 1: Partial static auto-tuning of asynchronous motor 2: Dynamic auto-tuning of asynchronous motor 3: Complete static auto-tuning of asynchronous motor 5: Dead zone auto-tuning 14: UV gain error auto-tuning	Dynamic auto-tuning and inertia auto-tuning are suitable for occasions where the motor can rotate without load. If little load torque is output after the motor rotates, the scenario will be regarded as no load even through the motor does not completely disconnect from the load mechanism. Static auto-tuning is suitable for situations where the motor cannot rotate. In dynamic auto-tuning, all parameters will be tuned to ensure optimal operating performance. Differences between different kinds of auto-tuning modes are as follows: Compared with dynamic auto-tuning, in the partial static auto-tuning mode, inertia and friction torque parameters are not tuned, and the mutual induction and no-load current are less accurate. Compared with the complete static auto-tuning mode, in the partial static auto-tuning mode, mutual induction and no-load current are not tuned.

6.3.7 Setting the Command Source

Set b1-00 or b3-00 to select the command source of the control channel. The command source is the source or input mode of commands to control the startup, stop, forward running, reverse running, and jogging of the AC drive.

The following procedure takes setting the command source to the operating panel as an example.

1. Set b1-00 to 0 and press to set the command source of control channel 1 to the operating panel.
2. Set b5-01 to 10 Hz and press . The operating panel displays the set frequency 10 Hz.
3. Press to start the AC drive (the RUN indicator is on). Then the drive runs at the frequency of 10 Hz.

4. When the AC drive is running, press to stop the AC drive (the RUN indicator is off).

The following table describes parameters related to the command source.

Table 6–5 Related parameter

Parameter Code	Parameter Name	Default	Value Range	Description
b0-02	Control channel selection	0	0: Control channel 1 1: Control channel 2 3: DI1 4: DI2 5: DI3 6: DI4 7: DI5 (MD600A) Others: B connector	This parameter is used to select the control channel. When it is set to 0, control channel 1 is selected. When it is set to 1, control channel 2 is selected.
b1 - 00	Command source of control channel 1	0	0: Operating panel 1: Terminal 2: Communication 3: User-defined	This parameter is used to select the command source of control channel 1. 0: LCD operating panel or SOP operating panel 1: DI (select the related function of the DI) 2: Communication control such as the Modbus 3: User-defined source (such as terminal, OFF1, OFF2, or OFF3)
b3-00	Command source of control channel 2	0	0: Operating panel 1: Terminal 2: Communication 3: User-defined	This parameter is used to select the command source of control channel 2. 0: LCD operating panel or SOP operating panel 1: DI (select the related function of the DI) 2: Communication control such as the Modbus 3: User-defined source (such as terminal, OFF1, OFF2, or OFF3)

6.3.8 Setting the Frequency Source

Set b5-00 or b6-00 to select a frequency source. The frequency source indicates the running frequency source or input source.

Set b5-00 or b6-00 to 0 to select digital setting as the frequency source. Then you can set the frequency of the AC drive through the operating panel.

1. After power-on, press to enter the parameter setting interface. Press , , and to locate b0-03 (set channel selection) and set it to 0 (set channel 1). Then press OK to confirm the settings.
2. Locate b5-00 (main frequency source) and set it to 0 (digital setting).
3. Locate b5-01 (main frequency digital setting) and set it to 20.00. That is, the output frequency of set channel 1 to 20.00 Hz. The operating panel blinks 20.00.

The following table describes parameters related to the frequency source.

Table 6–6 Related parameter

Parameter Code	Parameter Name	Default	Value Range	Description
b0-03	Set channel selection	0	0: Set channel 1 1: Set channel 2 3: DI1 4: DI2 5: DI3 6: DI4 7: DI5 (MD600A) Others: B connector	This parameter is used to select the set channel. When it is set to 0, set channel 1 is selected. When it is set to 1, set channel 2 is selected.

Parameter Code	Parameter Name	Default	Value Range	Description
b5-00	Main frequency source	0	0: Digital setting 2: AI1 5: Pulse reference 6: Multi-reference	0: Digital setting The initial frequency is used as the main frequency. The frequency can be changed by using the ▲ and ▼ keys on the operating panel or the multi-functional input terminal functioning as the UP/DOWN key. When the AC drive is powered off and then powered on, whether the frequency adjusted by using UP/DOWN keys or multi-functional input terminal functioning as the UP/DOWN key is saved depends on the configuration of "retain values set by using UP/DOWN keys or multi-functional input terminal functioning as the UP/DOWN key". The "clear values adjusted by using UP/DOWN keys or multi-functional input terminal functioning as the UP/DOWN key" function of the DI allows you to clear values set by using UP/DOWN keys or multi-functional input terminal functioning as the UP/DOWN key. 2: AI1 The frequency reference is calculated based on current or voltage signals input through AI1 and the preset AI curve. 5: Pulse reference The frequency is set by the DI pulse frequency. The frequency is calculated according to the corresponding relationship curve between the pulse frequency and the frequency. 6: Multi-reference When the parameter is set to 6, combinations of different DI states correspond to different frequency references. The four multi-reference terminals can provide 16 states, corresponding to 16 reference values.

Parameter Code	Parameter Name	Default	Value Range	Description
b5-00	Main frequency source	0	7: Simple PLC 8: PID	7: Simple PLC Simple PLC is a multi-reference used to control the running time and acceleration/deceleration time. Multi-reference parameters are used to set the values of each frequency. The simple PLC module is used to set the running time and acceleration/deceleration time of each frequency. Up to 16 speeds can be set. 8: PID PID is selected as the frequency source. As a general process control method, PID control is a closed-loop mechanism in which each controlled variable is stabilized at the target level. This is implemented through proportional, integral, and differential calculation of the difference between the feedback signal and the target signal of the controlled variable and through adjustment of the AC drive output frequency. PID control is generally used in closed-loop control scenarios, such as constant pressure closed-loop control and constant tension closed-loop control.

Parameter Code	Parameter Name	Default	Value Range	Description
b5-00	Main frequency source	0	9: Communication 10: Potentiometer MD-BP-M Others: F connector	9: Communication The frequency is set through communication. The frequency can be input through remote communication. The AC drive must be equipped with a communication card to communicate with the host controller. This mode is suitable for remote control or centralized control on multiple equipment. 10: Potentiometer MD-BP-M The frequency is set by the potentiometer MD-BP-M. This method is available when an external MD-BP-M is connected. You can increase or decrease the value by turning the knob of the potentiometer clockwise or counterclockwise. Others: F connector After the parameter No. of a floating connector is set, the connector value is read as the frequency. It is used for extension of common sources.

Parameter Code	Parameter Name	Default	Value Range	Description
b6-00	Main frequency source	0	0: Digital setting 2: AI1	0: Digital setting The initial frequency is used as the main frequency. The frequency can be changed by using the ▲ and ▼ keys on the operating panel or the multi-functional input terminal functioning as the UP/DOWN key. When the AC drive is powered off and then powered on, whether the frequency adjusted by using UP/DOWN keys or multi-functional input terminal functioning as the UP/DOWN key is saved depends on the configuration of "retain values set by using UP/DOWN keys or multi-functional input terminal functioning as the UP/DOWN key". The "clear values adjusted by using UP/DOWN keys or multi-functional input terminal functioning as the UP/DOWN key" function of the DI allows you to clear values set by using UP/DOWN keys or multi-functional input terminal functioning as the UP/DOWN key. 2: AI1 The frequency reference is calculated based on current or voltage signals input through AI1 and the preset AI curve.

Parameter Code	Parameter Name	Default	Value Range	Description
b6-00	Main frequency source	0	5: Pulse reference 6: Multi-reference 7: Simple PLC 8: PID	5: Pulse reference The frequency is set by the DI pulse frequency. The frequency is calculated according to the corresponding relationship curve between the pulse frequency and the frequency. 6: Multi-reference When the parameter is set to 6, combinations of different DI states correspond to different frequency references. The four multi-reference terminals can provide 16 states, corresponding to 16 reference values. 7: Simple PLC Simple PLC is a multi-reference used to control the running time and acceleration/deceleration time. Multi-reference parameters are used to set the values of each frequency. The simple PLC module is used to set the running time and acceleration/deceleration time of each frequency. Up to 16 speeds can be set. 8: PID PID is selected as the frequency source. As a general process control method, PID control is a closed-loop mechanism in which each controlled variable is stabilized at the target level. This is implemented through proportional, integral, and differential calculation of the difference between the feedback signal and the target signal of the controlled variable and through adjustment of the AC drive output frequency. PID control is generally used in closed-loop control scenarios, such as constant pressure closed-loop control and constant tension closed-loop control.

Parameter Code	Parameter Name	Default	Value Range	Description
b6-00	Main frequency source	0	9: Communication 10: Potentiometer MD-BP-M Others: F connector	9: Communication The frequency is set through communication. The frequency can be input through remote communication. The AC drive must be equipped with a communication card to communicate with the host controller. This mode is suitable for remote control or centralized control on multiple equipment. 10: Potentiometer MD-BP-M The frequency is set by the potentiometer MD-BP-M. This method is available when an external MD-BP-M is connected. You can increase or decrease the value by turning the knob of the potentiometer clockwise or counterclockwise. Others: F connector After the parameter No. of a floating connector is set, the connector value is read as the frequency. It is used for extension of common sources.

6.3.9 Setting the Acceleration/Deceleration Time

Acceleration time indicates the time required by the AC drive to accelerate from 0 Hz to b7-01 (ramp acceleration/deceleration time base frequency). Deceleration time indicates the time required by the AC drive to decelerate from b7-01 (ramp acceleration/deceleration time base frequency) to 0 Hz.

1. Set b7-01 (ramp acceleration/deceleration time base frequency) to 1 (maximum frequency) and set the maximum motor frequency (C4-10) to 50 Hz.
2. Set the acceleration time (b7-04) to 10s. In this case, the accelerated speed during acceleration is 5 Hz/s (50 Hz/10s). Set the deceleration time (b7-05) to 25s. In this case, the accelerated speed during deceleration is 2 Hz/s (50 Hz/25s).
3. Set the running frequency to 25 Hz and start the AC drive. The drive will accelerate to 25 Hz at the speed of 5 Hz/s and then run at the frequency of 25 Hz. The actual acceleration time is 5s.
4. Stop the AC drive. The drive will decelerate to zero frequency at the speed of 2 Hz/s and then stop. The actual deceleration time is 12.5s.

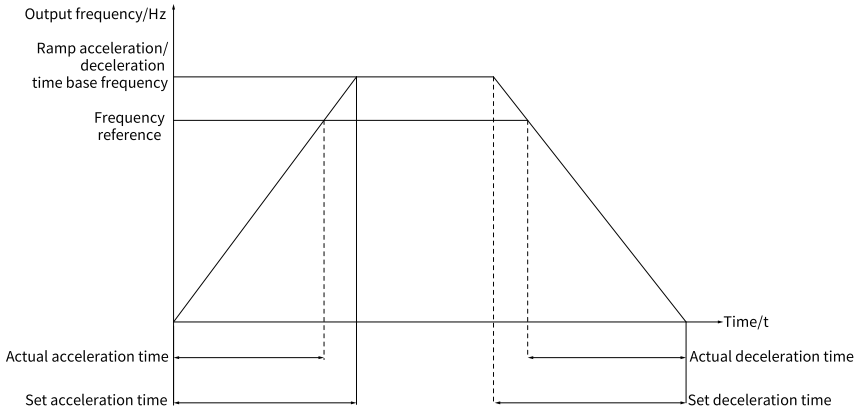

The following table describes parameters related to acceleration/deceleration time.

Table 6–7 Related parameter

Parameter Code	Parameter Name	Default	Value Range	Description
b7-01	Ramp acceleration/ deceleration time base frequency	0	0 to 3	It is used to select acceleration/ deceleration time base frequency. Acceleration time indicates time required by the AC drive to accelerate from 0 Hz to the ramp acceleration/ deceleration time base frequency. Deceleration time indicates time required by the AC drive to decelerate from the ramp acceleration/ deceleration time base frequency to 0 Hz.
b7 - 04	Ramp 1 acceleration time	20.0s	0.0s to 6500.0s	It indicates the time required for the output frequency to increase from 0 to the ramp acceleration/deceleration time base frequency (b7-01). The time is used to set the accelerated speed during acceleration. The AC drive provides four groups of acceleration/deceleration time, which can be selected by using the parameter or DI. This parameter specifies the first acceleration time.
b7 - 05	Ramp 1 deceleration time	20.0s	0.0s to 6500.0s	It indicates the time required for the output frequency to decrease from the ramp acceleration/deceleration time base frequency (b7-01) to 0. The time is used to set the accelerated speed during deceleration. The AC drive provides four groups of acceleration/deceleration time, which can be selected by using the parameter or DI. This parameter specifies the first deceleration time.

6.3.10Setting Stop Mode Parameters

Under normal working conditions, the AC drive stops running according to the OFF1 stop mode. The procedure is as follows:

1. Set d0-04 (OFF1 stop mode) to 0 (decelerate to stop).
2. Set F0-30 (running frequency) to 50.00 Hz. For details, see *"6.3.9 Setting the Acceleration/Deceleration Time" on page 44*.

3. Start the AC drive. Then the drive accelerates to the frequency of 50 Hz and then runs at the frequency of 50 Hz. Stop the AC drive. Then the drive decelerates to zero frequency according to the set deceleration time.

The following table describes parameters related to stop function.

Table 6–8 Parameters related to stop function

Parameter Code	Parameter Name	Default	Value Range	Description
d0-04	OFF1 stop mode	0	0 to 2	It is used to select the stop mode for the AC drive in the running or jogging state. 0: Determined by the valid ramp settings 1: Coast to stop 2: Stop at maximum capability
d0-05	OFF2 stop mode	0	0	It is equivalent to the function of coast to stop assigned to a terminal.
d0-06	OFF3 stop mode	0	0 to 1	It is used to select the OFF3 stop mode. 0: It is equivalent to the function of emergency stop assigned to a terminal. The deceleration time is determined by b7-34/b7-35/b7-36. 1: Stop at maximum capability
d0 - 27	Start frequency of DC braking for stop	0.0 Hz	0.0 Hz to 600.0 Hz	During deceleration to stop, when the operating frequency is reduced to d0-27, the drive blocks the output for the time set by d0-28, outputs the DC braking current set by d0-30 for the time set by d0-29, and then enters the shutdown state. Do not set the parameter to a large value; otherwise, the drive may encounter overcurrent.
d0 - 28	DC braking waiting time for stop	0.0s	0.0s to 100.0s	During deceleration to stop, when the operating frequency is reduced to d0-27, the drive blocks the output for the time set by d0-28, outputs the DC braking current set by d0-30 for the time set by d0-29, and then enters the shutdown state.

Parameter Code	Parameter Name	Default	Value Range	Description
d0 - 29	DC braking time for stop	0.0s	0.0s to 100.0s	During deceleration to stop, when the operating frequency is reduced to d0-27, the drive blocks the output for the time set by d0-28, outputs the DC braking current set by d0-30 for the time set by d0-29, and then enters the shutdown state.
d0 - 30	DC braking current for stop	50%	0% to 100.0%	During deceleration to stop, when the operating frequency is reduced to d0-27, the drive blocks the output for the time set by d0-28, outputs the DC braking current set by d0-30 for the time set by d0-29, and then enters the shutdown state. The actual DC braking current is d0-30 x rated motor current. A larger value indicates stronger braking force.

7 Troubleshooting

The following table describes common faults, possible causes, check methods, and solutions. For a complete fault list, refer to the "Fault List" section in the *MD600 Series Basic AC Drive Function Guide*.

Table 7–1 Symptoms, fault causes, and solutions

No.	Symptom	Possible Cause	Check Method	Solution
1	There is no display upon power-on.	The drive is not connected to the grid or the grid voltage is too low.	Measure the input power supply and check whether the voltage is lower than the undervoltage threshold (A3-55/A3-56).	Adjust the input power supply so that it can meet the normal operation requirements of the AC drive.
		The switching power supply on the drive board of the drive is faulty.	Measure the voltage values of the 24V and 10V output interfaces on the drive board to check whether the values reach 24 V and 10 V.	Contact Inovance for technical support.
Continued	Continued	The pre-charge resistor of the AC drive is damaged.	Determine the standard value of the pre-charge resistor based on the model information on the AC drive housing, and then measure the pre-charge resistor to check whether it is damaged. **Voltage class of three-phase 380 V model** ● The 0.37 kW, 0.75 kW and 1.5 kW models have one 15 Ω pre-charge resistor. The 2.2 kW models have two 15 Ω pre-charge resistors in series. ● The 4 kW and 5.5 kW models have two 5 Ω pre-charge resistors in series. **Voltage class of single-phase 220 V model** ● The 0.37 kW and 0.75 kW models have one 20 Ω pre-charge resistor. ● The 1.5 kW models have two 20 Ω pre-charge resistors in series. ● The 2.2 kW models have two 5 Ω pre-charge resistors in series.	Contact Inovance for technical support.

No.	Symptom	Possible Cause	Check Method	Solution
Continued	Continued	The rectifier bridge is damaged.	Measure the bus voltage and check whether the voltage is lower than the undervoltage threshold (A3-55/A3-56). If the bus voltage is lower than the undervoltage threshold or no measured value is displayed, the rectifier bridge is damaged.	Continued
		The control board or the operating panel is faulty.	Check whether the switched-mode power supply, pre-charge resistor, and bus voltage are normal. If they are normal, the control board or operating panel may be faulty.	
2	"-H-C" is displayed after power-on.	The motor or the motor cable is short circuited to ground.	Check the motor and output cable voltage with a tramegger. If the voltage is close to 0, the motor or motor cable is short circuited to ground.	Contact Inovance for technical support.
		The mains voltage is too low.	Measure the bus voltage and check whether the voltage is lower than the undervoltage threshold (A3-55/A3-56).	
		Related components on the control board are damaged.	If the motor is not short circuited to ground and the power grid voltage is normal, the control board may be damaged.	
3	"E023.1" is displayed upon power-on.	The motor or the motor cable is short circuited to ground.	Check the motor and output cable voltage with a tramegger. If the voltage is close to 0, the motor or motor cable is short circuited to ground.	Reconnect the circuit that is shorted.
		The AC drive is damaged.	If the motor or motor cable is not short circuited to ground, the AC drive may be damaged.	Contact Inovance for technical support.
4	The display is normal upon power-on. However, after the drive starts to run, "-H-C-" is displayed and the drive stops immediately.	The cable of the external control terminal is short-circuited.	Measure the voltage of the external control terminal to determine whether short circuit occurs.	Reconnect the terminal that is shorted.
		The fan is damaged or shorted.	Check whether the fan can work properly and check whether the circuit voltage is close to 0.	Reconnect the fan cable or contact the manufacturer to replace the fan.
		The AC drive is damaged.	If the motor is not short circuited to ground and the fan is normal, the AC drive may be damaged.	Contact Inovance for technical support.

No.	Symptom	Possible Cause	Check Method	Solution
5	"E014.1" (drive overheat) is detected frequently.	The carrier frequency is too high.	Check the set carrier frequency (A5-01) and effective carrier frequency (A5-02). If the values are much higher than the default values, reset the parameters.	Reduce the set carrier frequency (A5-01) and effective carrier frequency (A5-02).
		The fan is damaged or the ventilation duct is blocked.	Check whether the fan input voltage confirms to the fan specification. Check whether the fan can work normally and whether the ventilation duct is blocked.	Adjust the fan input voltage to make it work normally. Replace the fan or clean the ventilation duct.
		The ambient temperature is too high.	Check whether the ambient temperature is higher than 50°C.	Lower down the ambient temperature, and then start the AC drive.
		Components (thermistor or other devices) inside the AC drive are damaged.	Check the function of components (thermistor or other devices) on the control board.	Contact Inovance for technical support.

No.	Symptom	Possible Cause	Check Method	Solution
6	The motor does not rotate when the AC drive is running.	The cabling between the AC drive and the motor is abnormal.	Check whether wiring between the AC drive and the motor is correct by referring to the electrical wiring diagram in MD600 Series Basic AC Drive Hardware Guide.	Reconnect the AC drive and the motor.
		Motor parameters are set incorrectly.	Check whether the motor rated parameters (C4-01 to C4-11) are set correctly according to the motor nameplate.	Restore to factory settings and reset related parameters correctly.
			Check whether the rated motor parameters (C4-01 to C4-11) are consistent with those on the motor nameplate, such as the rated motor frequency and rated motor speed.	Set the motor rated parameters (C4-01 to C4-11) according to the motor nameplate.
			Check whether the control mode (d0-00), command source of control channel 1 (b1-00), and command source of control channel 2 (b3-00) are set correctly according to the actual working conditions.	Set d0-00, b1-00, and b3-00 correctly according to working conditions.
			Check the torque boost parameter under heavy load start in the V/f control mode.	Set torque boost parameters (d2-14/d2-15) properly.
		The drive board is faulty.	If the parameters are set correctly and the wiring is proper, the drive board may be faulty.	Contact Inovance for technical support.
7	DI inactive	The related parameters are set incorrectly.	Check whether parameters related to terminal settings (E0 group) comply with the scheme design.	Reset parameters related to terminal settings (E0 group).
		External signals are incorrect.	Check whether the external signal cable is connected correctly by referring to the electrical wiring diagram in MD600 Series Basic AC Drive Hardware Guide.	Reconnect the external signal cable.
		DIP switch error	Check whether the S4 DIP switch is set to 24 V.	Set the S4 DIP switch to 24 V.
		The control board is faulty.	If the parameters are set correctly and the external signal cable is connected properly, the control board may be faulty.	Contact Inovance for technical support.

No.	Symptom	Possible Cause	Check Method	Solution
8	The drive detects overcurrent (E002.1, E002.2) or overvoltage (E005.2) frequently.	Motor parameters are set incorrectly.	Check whether the motor rated parameters (C4-01 to C4-11) are set correctly according to the motor nameplate and motor user guide.	Reset motor parameters or perform motor auto-tuning.
		The acceleration/ deceleration time is improper.	Set F0-48 (acceleration time) to 120s. If no fault is reported, the value of F0-48 is too small.	Set acceleration/deceleration time properly. Increase the time by 1s to 2s each time for test.
		A running motor is started.	Check whether a running motor is started.	Set the start mode (d0-02) to flying start or start the motor after it stops.
		The terminal function is set to "function 47 emergency stop". The DI signal suffers interference.	Check whether function 47 (emergency stop) is assigned to the terminal and check whether the terminal input is normal.	Check the DI wiring by referring to the electrical wiring diagram in MD600 Series Basic AC Drive Hardware Guide. Increase the DI filter time (E0-16/E0-17) by step of 0.05s.
		The load fluctuates.	Check the load condition.	Contact Inovance for technical support.
9	The motor coasts to stop or the brake fails during deceleration or deceleration to stop.	The overvoltage suppression protection function takes effect.	Check whether the braking resistor is configured and whether d1-54 (overvoltage suppression) is set to 1 (enable).	If the braking resistor is configured, set d1-54 (overvoltage suppression) is set to 0 (disable).
10	The motor is running properly, but the AC drive reports an overload error (E010.1)	The AC drive power is smaller than the motor power.	Compare the rated power of the AC drive (A3-02) with that of the motor (C4-01). Check the carrier frequency (A5-01/A5-02). If the values of A5-01/A5-02 are higher than the default values, decrease the values.	The AC drive is derated when the motor is running at the frequency below 5 Hz or when the carrier frequency is high. Decrease the carrier frequency (A5-01/A5-02) or select the AC drive with a higher power rating.
11	The drive detects overvoltage (E005.2) during deceleration.	The braking resistor is not connected.	Check whether the braking resistor is connected.	Configure and connect a braking resistor.
		The overvoltage suppression function is disabled.	Check whether d1-54 (overvoltage suppression) is set to 1 (enable).	Set d1-54 (overvoltage suppression) is set to 1 (enable).
		The overexcitation function is disabled.	Check the value of d0-41 (overexcitation gain). The value 0 indicates that overexcitation is disabled.	Increase the value of d0-41 (overexcitation gain) properly. This can increase motor energy consumption during deceleration, decrease bus feedback energy, and decrease the occurrence frequency of overvoltage during deceleration.

8 Common Parameter Settings

The following table describes certain common parameters in brief. The parameter modification modes are as follows:

- Unchangeable
- At stop
- Real time

For details on the complete parameter list, see "List of Parameters" in the *MD600 Series Basic AC Drive Function Guide.*

Parameter Code	Communication Address	Parameter Name	Value	Default	Unit	Change Mode
F0-00	0xF000	Load type	0: Heavy load application 1: Light load application	0	-	Unchangeable
F0-01	0xF001	Motor control mode	2: V/f	2	-	Unchangeable
F0-02	0xF002	Motor control method	0: Speed control 1: Torque control 2: Terminal input 3: DI1 4: DI2 5: DI3 6: DI4 7: DI5 (MD600A) Others: B connector	0	-	Unchangeable
F0-03	0xF003	Command source of control channel 1	0: Operating panel 1: Terminal 2: Communication 3: Customized	0	-	At stop
F0-07	0xF007	Mode of terminal start/stop module A	0: Disable 1: IN1 is used to start the AC drive. 2: IN1 is used to start the AC drive, and IN2 is used to set the direction. 3: IN1 is used for forward start, and IN2 is used for reverse start. 4: IN1P (rising edge) is used to start the AC drive, and IN2 is used to stop the AC drive. 5: IN1P (rising edge) is used to start the AC drive, IN2 is used to stop the AC drive, and IN3 is used to set the direction. 6: IN1P (rising edge) is used for forward start, IN2P (rising edge) is used for reverse start, and IN3 is used to stop the AC drive.	3	-	At stop

Parameter Code	Communication Address	Parameter Name	Value	Default	Unit	Change Mode
F0-10	0xF00A	DI1 function selection	0: No function 1: Terminal control IN1 2: Terminal control IN2 3: Terminal control IN3 4: Jogging 1 (JOG1) 5: Jogging 2 (JOG2) 6: Function as UP key for frequency adjustment 7: Function as DOWN key for frequency adjustment 8: Coast to stop 9: Fault reset (RESET) 10: Running pause (terminal control) 11:NO input of external fault 12: Multi-reference terminal 1 13: Multi-reference terminal 2 14: Multi-reference terminal 3 15: Multi-reference terminal 4 16: Terminal 1 for acceleration/ deceleration selection 17: Terminal 2 for acceleration/ deceleration selection 19: Clear data set by UP/DOWN key or by terminal functioning as UP/DOWN key 21: Acceleration/Deceleration inhibited 22: PID pause 23: Simple PLC state reset 24: Wobble frequency pause 25:Counter input 26: Counter reset 27: Length count input 28: Length reset 29: Torque control inhibited 30: Pulse frequency input (available only for DI4) 32: Immediate DC braking 33: NC input of external fault 34: Frequency modification 35: Opposite to PID operation direction 36: External stop terminal 1 38: PID integral pause (To be continued)	1	-	At stop

Parameter Code	Communication Address	Parameter Name	Value	Default	Unit	Change Mode
F0-10	0xF00A	DI1 function selection	Continued 43: PID parameter switchover 44: User-defined fault 1 45: User-defined fault 2 46: Speed/Torque control selection 47: Emergency stop 49: Deceleration DC braking 50: Clear the current running time 66: Forcibly change to local control mode 67: Forcibly change to terminal control mode 68: Forcibly change to communication control mode 69: Forcibly change to user-defined control mode 70: Control channel selection 71: Set channel selection 72: Terminal module A/B selection 76: Reserved (motor selection terminal 2) 77: Operation enabling (all modes) 78: Forward operation permission 79: Reverse operation permission 80: Set RFG input to zero	1	-	At stop
F0-11	0xF00B	DI2 function selection	Same as F0-10	4	-	At stop
F0-12	0xF00C	DI3 function selection	Same as F0-10	9	-	At stop
F0-13	0xF00D	DI4 function selection	Same as F0-10	12	-	At stop
F0-14	0xF00E	DI5 function selection (for MD600A)	Same as F0-10	0	-	At stop

Parameter Code	Communication Address	Parameter Name	Value	Default	Unit	Change Mode
F0-17	0xF011	RO1 output function selection	0: No output 1: AC drive running 2: Fault output 3: Frequency level detection FDT1 output 4: Frequency reach 5: Zero-speed running (no output at stop) 6: Motor overload warning 7: AC drive overload warning 8: Set count value reach 9: Designated count value reach 10: Length reach 11: Simple PLC cycle completed 12: Cumulative running time reach 13: Wobble frequency limited 14: Torque limited 15: Ready to run 17: Frequency upper limit reach 18: Frequency lower limit reach (no output at stop) 19: Undervoltage output 20: Communication setting 23: Zero-speed running 2 (output at stop) 24: Cumulative power-on time reach 25: Frequency level detection FDT2 output 26: Output upon frequency 1 reach 27: Output upon frequency 2 reach 28: Output upon current 1 reach 29: Output upon current 2 reach 30: Output upon expiration of scheduled time 31: AI1 input limit exceeded 32: Three-phase loss 33: Reverse running 34: Zero current state 35: Module temperature reach 36: Output current limit exceeded 37: Frequency lower limit reach (output at stop) 38: Output upon fault, minor fault, or warning 40: Current running time reach 41: Output upon fault (excluding undervoltage) 43: Output upon minor fault or warning Others: B connector	2	-	Real time

Parameter Code	Communication Address	Parameter Name	Value	Default	Unit	Change Mode
F0-21	0xF015	DO1 function selection (for MD600A)	0: No output 1: AC drive running 2: Fault output 3: Frequency level detection FDT1 output 4: Frequency reach 5: Zero-speed running (no output at stop) 6: Motor overload warning 7: AC drive overload warning 8: Set count value reach 9: Designated count value reach 10: Length reach 11: Simple PLC cycle completed 12: Cumulative running time reach 13: Wobble frequency limited 14: Torque limited 15: Ready to run 17: Frequency upper limit reach 18: Frequency lower limit reach (no output at stop) 19: Undervoltage output 20: Communication setting 23: Zero-speed running 2 (output at stop) 24: Cumulative power-on time reach 25: Frequency level detection FDT2 output 26: Output upon frequency 1 reach 27: Output upon frequency 2 reach 28: Output upon current 1 reach 29: Output upon current 2 reach 30: Output upon expiration of scheduled time 31: AI1 input limit exceeded 32: Three-phase loss 33: Reverse running 34: Zero current state 35: Module temperature reach 36: Output current limit exceeded 37: Frequency lower limit reach (output at stop) 38: Output upon fault, minor fault, or warning 40: Current running time reach 41: Output upon fault (excluding undervoltage) 43: Output upon minor fault or warning Others: B connector	1	-	Real time

Parameter Code	Communication Address	Parameter Name	Value	Default	Unit	Change Mode
F0-22	0xF016	DO2 function selection (for MD600A)	0: No output 1: AC drive running 2: Fault output 3: Frequency level detection FDT1 output 4: Frequency reach 5: Zero-speed running (no output at stop) 6: Motor overload warning 7: AC drive overload warning 8: Set count value reach 9: Designated count value reach 10: Length reach 11: Simple PLC cycle completed 12: Cumulative running time reach 13: Wobble frequency limited 14: Torque limited 15: Ready to run 17: Frequency upper limit reach 18: Frequency lower limit reach (no output at stop) 19: Undervoltage output 20: Communication setting 23: Zero-speed running 2 (output at stop) 24: Cumulative power-on time reach 25: Frequency level detection FDT2 output 26: Output upon frequency 1 reach 27: Output upon frequency 2 reach 28: Output upon current 1 reach 29: Output upon current 2 reach 30: Output upon expiration of scheduled time 31: AI1 input limit exceeded 32: Three-phase loss 33: Reverse running 34: Zero current state 35: Module temperature reach 36: Output current limit exceeded 37: Frequency lower limit reach (output at stop) 38: Output upon fault, minor fault, or warning 40: Current running time reach 41: Output upon fault (excluding undervoltage) 43: Output upon minor fault or warning Others: B connector	4	-	Real time
F0-25	0xF019	Frequency decimal place	1: One decimal place 2: Two decimal places	2	-	At stop

Parameter Code	Communication Address	Parameter Name	Value	Default	Unit	Change Mode
F0-26	0xF01A	Maximum motor frequency	0.00 Hz to 599.00 Hz	50.00	Hz	Unchangeable
F0-29	0xF01D	Main frequency source	0: F0-30 2: AI1 5: Pulse reference 6: Multi-reference 7: Simple PLC 8: PID 9: Communication 10: Potentiometer MD-BP-M Others: F connector	0	-	Real time
F0-30	0xF01E	Digital setting of main frequency	0.00 Hz to A2-17	50.00	Hz	Real time
F0-31	0xF01F	Auxiliary frequency source	0: Invalid 2: AI1 5: Pulse reference 6: Multi-reference 7: Simple PLC 8: PID 9: Communication 10: Potentiometer MD-BP-M Others: F connector	0	-	Real time
F0-32	0xF020	Main and auxiliary frequency operation	0: Main frequency + auxiliary frequency 1: Main frequency - auxiliary frequency 2: Max. (|main frequency|, |auxiliary frequency|) 3: Min. (|main frequency|, |auxiliary frequency|) 4: Main frequency x auxiliary frequency	0	-	Real time
F0-33	0xF021	Auxiliary frequency source	0: Invalid 2: AI1 5: Pulse reference 6: Multi-reference 7: Simple PLC 8: PID 9: Communication 10: Potentiometer MD-BP-M Others: F connector	0	-	Real time
F0-34	0xF022	Main frequency gain coefficient source	0: 100% 2: AI1 5: Pulse reference 6: Multi-reference 7: Simple PLC 8: PID 9: Communication 10: Potentiometer MD-BP-M Others: F connector	0	-	Real time

Parameter Code	Communication Address	Parameter Name	Value	Default	Unit	Change Mode
F0-35	0xF023	Auxiliary frequency gain coefficient source	0: 100% 2: AI1 5: Pulse reference 6: Multi-reference 7: Simple PLC 8: PID 9: Communication 10: Potentiometer MD-BP-M Others: F connector	0	-	Real time
F0-38	0xF026	Multi-reference 0 setting mode	0: F0-39 1: AI1 2: Reserved 3: Potentiometer MD-BP-M 4: Pulse reference 5: PID 6: b5-01/b6-01 (main frequency digital setting) Others: F connector	0	-	Real time
F0-39	0xF027	Multi-reference 0	-800.0% to 800.0%	0.0	%	Real time
F0-40	0xF028	Multi-reference 1	-800.0% to 800.0%	0.0	%	Real time
F0-41	0xF029	Multi-reference 2	-800.0% to 800.0%	0.0	%	Real time
F0-42	0xF02A	Multi-reference 3	-800.0% to 800.0%	0.0	%	Real time
F0-45	0xF02D	Ramp acceleration/deceleration mode	0: Linear acceleration/deceleration 1: S-curve acceleration/deceleration	0	-	Real time
F0-46	0xF02E	Ramp acceleration/deceleration time base frequency	0: Rated frequency 1: Maximum frequency 2: 100 Hz 3: Set frequency	1	-	Real time
F0-48	0xF030	Ramp 1 acceleration time	0.0s to 6500.0s	20.0	s	Real time
F0-49	0xF031	Ramp 1 deceleration time	0.0s to 6500.0s	20.0	s	Real time
F0-50	0xF032	Ramp 1 acceleration start arc	0.00s to 650.00s	0.00	s	Real time
F0-51	0xF033	Ramp 1 acceleration end arc	0.00s to 650.00s	0.00	s	Real time
F0-52	0xF034	Ramp 1 deceleration start arc	0.00s to 650.00s	0.00	s	Real time
F0-53	0xF035	Ramp 1 deceleration end arc	0.00s to 650.00s	0.00	s	Real time

Parameter Code	Communication Address	Parameter Name	Value	Default	Unit	Change Mode
F0-56	0xF038	Jogging frequency 1 source	0: F0-57 2: AI1 5: Pulse reference 6: Multi-reference 7: Simple PLC 8: PID 9: Communication 10: Potentiometer MD-BP-M Others: F connector	0	-	Real time
F0-57	0xF039	Digital setting of jogging frequency 1	-50.00 Hz to 50.00 Hz	2.00	Hz	Real time
F0-58	0xF03A	Jogging frequency 2 source	0: F0-59 2: AI1 5: Pulse reference 6: Multi-reference 7: Simple PLC 8: PID 9: Communication 10: Potentiometer MD-BP-M Others: F connector	0	-	Real time
F0-59	0xF03B	Digital setting of jogging frequency 2	-50.00 Hz to 50.00 Hz	-2.00	Hz	Real time
F0-62	0xF03E	Jogging ramp source	0: Normal running ramp time 1: Jogging ramp time	0	-	Real time
F0-63	0xF03F	Ramp acceleration time of jogging	0.00s to 650.00s	20.00	s	Real time
F0-64	0xF040	Ramp deceleration time of jogging	0.00s to 650.00s	20.00	s	Real time
F1-00	0xF100	Motor type	0: Common asynchronous motor	0	-	Unchangeable
F1-01	0xF101	Rated motor power	0.1 kW to 1000.0 kW	3.7	kW	At stop
F1-03	0xF103	Rated motor voltage	1 V to 2000 V	380	V	At stop
F1-04	0xF104	Rated motor current	0.01 A to 655.35 A	9.00	A	At stop
F1-06	0xF106	Rated motor frequency	0.01 Hz to 599.00 Hz	50.00	Hz	At stop
F1-07	0xF107	Rated motor speed	1 RPM to 65535 RPM	1460	RPM	At stop
F1-10	0xF10A	Maximum motor frequency	C4-06 to 599.00 Hz	50.00	Hz	At stop
F1-11	0xF10B	Minimum motor frequency	0.00 Hz to C4-10	0.00	Hz	At stop
F1-20	0xF114	Stator resistance	0.001 Ω to 65.535 Ω	1.204	Ω	Real time

Parameter Code	Communication Address	Parameter Name	Value	Default	Unit	Change Mode
F1-22	0xF116	Asynchronous motor rotor resistance	0.001 Ω to 65.535 Ω	0.908	Ω	Real time
F1-24	0xF118	Leakage inductance of asynchronous motor stator	0.01 mH to 655.35 mH	5.28	mH	Real time
F1-26	0xF11A	Leakage inductance of asynchronous motor rotor	0.01 mH to 655.35 mH	5.28	mH	Real time
F1-28	0xF11C	Asynchronous motor mutual inductance	0.1 mH to 6553.5 mH	156.8	mH	Real time
F1-30	0xF11E	No-load current of asynchronous motor	0.01 A to 655.35 A	4.20	A	Real time
F1-32	0xF120	D axis inductance of synchronous motor	0.01 mH to 655.35 mH	5.28	mH	Real time
F1-34	0xF122	Axis Q inductance of synchronous motor	0.01 mH to 655.35 mH	5.28	mH	Real time
F1-69	0xF145	Auto-tuning selection	0: No auto-tuning 1: Partial static auto-tuning of asynchronous motor 2: Dynamic auto-tuning of asynchronous motor 3: Complete static auto-tuning of asynchronous motor 5: Dead zone auto-tuning 14: UV gain difference auto-tuning	0	-	At stop
F2-14	0xF20E	Motor running direction selection	0: Same as the set direction 1: Opposite to the set direction	0	-	At stop
F2-15	0xF20F	Start mode	0: Direct start 1: Flying start	0	-	Real time
F2-16	0xF210	Flying start mode	0: Start from the frequency at stop 1: Start from the mains frequency 2: Start from the maximum frequency 4: Magnetic field directional flying start	4	-	Real time
F2-17	0xF211	ON_OFF1 (start/stop)	0: Decelerate to stop 1: Coast to stop 2: Stop at maximum capability	0	-	Real time

Parameter Code	Communication Address	Parameter Name	Value	Default	Unit	Change Mode
F2-20	0xF214	Positive speed	0: Prohibited 1: Allowed 2: Terminal input 3: DI1 4: DI2 5: DI3 6: DI4 7: DI5 (MD600A) Others: B connector	1	-	Real time
F2-21	0xF215	Negative speed	0: Prohibited 1: Allowed 2: Terminal input 3: DI1 4: DI2 5: DI3 6: DI4 7: DI5 (MD600A) Others: B connector	1	-	Real time
F2-22	0xF216	Digital setting of positive frequency upper limit	d1-07 to 800.0%	100.0	%	At stop
F2-23	0xF217	Digital setting of negative frequency upper limit	-800.0% to d1-08	-100.0	%	At stop
F2-24	0xF218	Source of positive frequency upper limit	0: 800% 2: AI1 5: Pulse reference 6: Multi-reference 7: Simple PLC 8: PID 9: Communication 10: Potentiometer MD-BP-M Others: F connector	0	-	Real time
F2-25	0xF219	Source of negative frequency upper limit	0: -800% 1: Opposite to positive frequency upper limit 2: AI1 5: Pulse reference 6: Multi-reference 7: Simple PLC 8: PID 9: Communication 10: Potentiometer MD-BP-M Others: F connector	1	-	Real time
F2-26	0xF21A	Digital setting of positive frequency lower limit	0.0% to d1-03	0.0	%	At stop

Parameter Code	Communication Address	Parameter Name	Value	Default	Unit	Change Mode
F2-27	0xF21B	Digital setting of negative frequency lower limit	d1-04 to 0.0%	0.0	%	At stop
F2-36	0xF224	Overexcitation gain (V/f)	0% to 200%	90	%	Real time
F2-37	0xF225	Overcurrent suppression	0: Disable 1: Enable	1	-	At stop
F2-38	0xF226	Overcurrent suppression point	80% to 300%	200	%	At stop
F2-39	0xF227	Overvoltage suppression	0: Disable 1: Enable	1	-	At stop
F2-40	0xF228	Overvoltage suppression action voltage	330.0 V to 800.0 V	770.0	V	Real time
F2-41	0xF229	Maximum rise frequency during overvoltage suppression (V/f)	0 Hz to 50 Hz	5	Hz	At stop
A0-00	0xA000	Parameter initialization	0: No action 1: Restore parameters (excluding motor parameters) to factory settings 2: Clear records 3: Restore parameters (including motor parameters) to factory settings 4: Back up current user parameters 5: Clear fault information 501: Restore user parameters from backup 503: Restore parameters (including motor parameters) to factory settings and clear records	0	-	At stop
A0-01	0xA001	User password	0 to 65535	0	-	Real time
A0-02	0xA002	Basic password	0 to 65535	0	-	Real time
A0-05	0xA005	Current permission level	0: Monitoring permission 1: Basic permission 2: Expert permission 3: Manufacturer permission	0	-	Unchangeable
A0-06	0xA006	Password input window	0 to 65535	0	-	Real time
A0-07	0xA007	Backed-up parameter clear	0: No operation 500: Clear all backed-up user parameters 1000: Clear all backed-up motor parameters	0	-	At stop

Parameter Code	Communication Address	Parameter Name	Value	Default	Unit	Change Mode
A0-08	0xA008	Backed-up parameter restoration	0: No operation 500: Restore user backup 501: Restore user macro backup 1 502: Restore user macro backup 2 503: Restore user macro backup 3 504: Restore user macro backup 4 505: Restore User macro backup 5 506: Restore user macro backup 6 2011: Restore motor macro backed-up parameter 1 to motor 1 2021: Restore motor macro backed-up parameter 2 to motor 1 2031: Restore motor macro backed-up parameter 3 to motor 1 2041: Restore motor macro backed-up parameter 4 to motor 1 2051: Restore motor macro backed-up parameter 5 to motor 1 2061: Restore motor macro backed-up parameter 6 to motor 1 2071: Restore motor macro backed-up parameter 7 to motor 1 2081: Restore motor macro backed-up parameter 8 to motor 1 2091: Restore motor macro backed-up parameter 9 to motor 1 2101: Restore motor macro backed-up parameter 10 to motor 1 2111: Restore motor macro backed-up parameter 11 to motor 1 2121: Restore motor macro backed-up parameter 12 to motor 1 2131: Restore motor macro backed-up parameter 13 to motor 1 2141: Restore motor macro backed-up parameter 14 to motor 1 2151: Restore motor macro backed-up parameter 15 to motor 1 2161: Restore motor macro backed-up parameter 16 to motor 1 2171: Restore motor macro backed-up parameter 17 to motor 1 2181: Restore motor macro backed-up parameter 18 to motor 1 2191: Restore motor macro backed-up parameter 19 to motor 1 2201: Restore motor macro backed-up parameter 20 to motor 1	0	-	At stop

Parameter Code	Communication Address	Parameter Name	Value	Default	Unit	Change Mode
A0-09	0xA009	User backup	0: No operation 400: Back up user parameters 401: Back up user macro parameters to address 1 402: Back up user macro parameters to address 2 403: Back up user macro parameters to address 3 404: Back up user macro parameters to address 4 405: Back up user macro parameters to address 5 406: Back up user macro parameters to address 6 1011: Back up motor 1 parameters to address 1 1021: Back up motor 1 parameters to address 2 1031: Back up motor 1 parameters to address 3 1041: Back up motor 1 parameters to address 4 1051: Back up motor 1 parameters to address 5 1061: Back up motor 1 parameters to address 6	0	-	At stop

Parameter Code	Communication Address	Parameter Name	Value	Default	Unit	Change Mode
Continued	Continued	Continued	1071: Back up motor 1 parameters to address 7 1081: Back up motor 1 parameters to address 8 1091: Back up motor 1 parameters to address 9 1101: Back up motor 1 parameters to address 10 1111: Back up motor 1 parameters to address 11 1121: Back up motor 1 parameters to address 12 1131: Back up motor 1 parameters to address 13 1141: Back up motor 1 parameters to address 14 1151: Back up motor 1 parameters to address 15 1161: Back up motor 1 parameters to address 16 1171: Back up motor 1 parameters to address 17 1181: Back up motor 1 parameters to address 18 1191: Back up motor 1 parameters to address 19 1201: Back up motor 1 parameters to address 20	Continued	Continued	Continued
A0-11	0xA00B	Frequency decimal place	1: One decimal place 2: Two decimal places	2	-	At stop

Parameter Code	Communication Address	Parameter Name	Value	Default	Unit	Change Mode
A0-12	0xA00C	Number of decimal places for load speed display (group U0)	Ones: Number of decimal places of U0-14/U0-24 0: 0 decimal place 1: 1 decimal place 2: 2 decimal places Tens: Number of decimal places of U0-19/U0-29 1: 1 decimal place 2: 2 decimal places Hundreds: Number of decimal places of U0-30/U0-31 0: 0 decimal place 1: 1 decimal place 2: 2 decimal places Thousands: Number of decimal places of U0-69 1: 1 decimal place 2: 2 decimal places	2220	-	Real time
A0-13	0xA00D	Individualized parameter display settings	Ones: User mode 0: Hidden 1: Displayed Tens: Correction mode 0: Hidden 1: Displayed Hundreds: Error menu 0: Hidden 1: Displayed	111	-	Real time
A0-14	0xA00E	Parameter protection	0: Disable 1: Enable	0	-	Real time

Parameter Code	Communication Address	Parameter Name	Value	Default	Unit	Change Mode
A0-17	0xA011	Parameter group display setting	Bit 0: Group F 0: Hidden 1: Displayed Bit 1: Group A 0: Displayed 1: Displayed Bit 2: Group B 0: Hidden 1: Displayed Bit 3: Group C 0: Hidden 1: Displayed Bit 4 : Group D 0: Hidden 1: Displayed Bit 5: Reserved 0: Hidden 1: Displayed Bit 6: Group E 0: Hidden 1: Displayed Bit 7: Group H 0: Hidden 1: Displayed Bit 8: Reserved 0: Hidden 1: Displayed Bit 9: Group N 0: Hidden 1: Displayed Bit 10: Group O 0: Hidden 1: Displayed Bit 11: Group P 0: Hidden 1: Displayed Bit 12: Group L 0: Hidden 1: Displayed Bit 13: Group U 0: Displayed 1: Displayed	0xEBFF	-	Real time
A1-00	0xA100	Current fault 1	0.0–6553.5	0.0	-	Unchangeable
A1-02	0xA102	Current fault 2	0.0–6553.5	0.0	-	Unchangeable

Parameter Code	Communication Address	Parameter Name	Value	Default	Unit	Change Mode
A1-04	0xA104	Current fault 3	0.0–6553.5	0.0	-	Unchangeable
A1-06	0xA106	Current fault 4	0.0–6553.5	0.0	-	Unchangeable
A1-08	0xA108	Current fault 5	0.0–6553.5	0.0	-	Unchangeable
A1-10	0xA10A	Current fault 6	0.0–6553.5	0.0	-	Unchangeable
A1-12	0xA10C	Current minor fault 1	0.0–6553.5	0.0	-	Unchangeable
A1-14	0xA10E	Current minor fault 2	0.0–6553.5	0.0	-	Unchangeable
A1-16	0xA110	Current minor fault 3	0.0–6553.5	0.0	-	Unchangeable
A1-18	0xA112	Current minor fault 4	0.0–6553.5	0.0	-	Unchangeable
A1-20	0xA114	Current minor fault 5	0.0–6553.5	0.0	-	Unchangeable
A1-22	0xA116	Current minor fault 6	0.0–6553.5	0.0	-	Unchangeable
A1-24	0xA118	Current warning 1	0.0–6553.5	0.0	-	Unchangeable
A1-26	0xA11A	Current warning 2	0.0–6553.5	0.0	-	Unchangeable
A1-28	0xA11C	Current warning 3	0.0–6553.5	0.0	-	Unchangeable
A1-30	0xA11E	Current warning 4	0.0–6553.5	0.0	-	Unchangeable
A1-32	0xA120	Current warning 5	0.0–6553.5	0.0	-	Unchangeable
A1-34	0xA122	Current warning 6	0.0–6553.5	0.0	-	Unchangeable
A1-36	0xA124	Current prompt 1	0.0–6553.5	0.0	-	Unchangeable
A1-38	0xA126	Current prompt 2	0.0–6553.5	0.0	-	Unchangeable
A1-40	0xA128	Current prompt 3	0.0–6553.5	0.0	-	Unchangeable
A1-42	0xA12A	Current prompt 4	0.0–6553.5	0.0	-	Unchangeable
A1-44	0xA12C	Current prompt 5	0.0–6553.5	0.0	-	Unchangeable
A1-46	0xA12E	Current prompt 6	0.0–6553.5	0.0	-	Unchangeable
A2-00	0xA200	Per-unit base value of voltage	0.0 V to 6553.5 V	0.0	V	Unchangeable

Parameter Code	Communication Address	Parameter Name	Value	Default	Unit	Change Mode
A2-01	0xA201	Per-unit base value of current	0.0 A to 6553.5 A	0.0	A	Unchangeable
A2-02	0xA202	Per-unit base value of speed	0 RPM to 65535 RPM	0	RPM	Unchangeable
A2-04	0xA204	Per-unit base value of frequency	0.0 Hz to 6553.5 Hz	0.0	Hz	Unchangeable
A2-05	0xA205	Per-unit base value of power	0.00 kW to 655.35 kW	0.00	kW	Unchangeable
A2-06	0xA206	Per-unit base value of torque	0.00 N·m to 655.35 N·m	0.00	N·m	Unchangeable
A2-09	0xA209	Per-unit base value of DC voltage	0 V to 65535 V	0	V	Unchangeable
A2-17	0xA211	Maximum motor frequency	0.00 Hz to 599.00 Hz	50.00	Hz	Unchangeable
A2-18	0xA212	Maximum motor frequency (fixed decimal place)	0.0 Hz to 599.0 Hz	50.0	Hz	Unchangeable
A2-20	0xA214	Product No.	0 to 65535	0	-	Unchangeable
A2-21	0xA215	Software type	0: Standard 1: Vector	0	-	Unchangeable
A2-22	0xA216	Performance software version	0.00–655.35	0.00	-	Unchangeable
A2-23	0xA217	Function software version	0.00–655.35	0.00	-	Unchangeable
A2-24	0xA218	Performance software sub-version	0.00–655.35	0.00	-	Unchangeable
A2-25	0xA219	Function software sub-version	0.00–655.35	0.00	-	Unchangeable
A2-33	0xA221	Drive unit heatsink temperature	-20°C to 120°C	0	°C	Unchangeable
A2-34	0xA222	Load type	0: Heavy load application 1: Light load application	0	-	Unchangeable
A2-35	0xA223	Parameter version	0.00–655.35	0.00	-	Unchangeable
A2-36	0xA224	Function diagram version	0.00–655.35	0.00	-	Unchangeable
A2-37	0xA225	Function diagram sub-version	0.00–655.35	0.00	-	Unchangeable
A3-01	0xA301	Load type	0: Heavy load application 1: Light load application	0	-	Unchangeable
A3-02	0xA302	Rated AC drive power	0.0 kW to 6553.5 kW	4.0	kW	Unchangeable

Parameter Code	Communication Address	Parameter Name	Value	Default	Unit	Change Mode
A3-03	0xA303	Rated AC drive current	0.0 A to 6553.5 A	9.5	A	Unchangeable
A3-04	0xA304	Rated AC drive voltage	0 V to 65535 V	380	V	Unchangeable
A3-05	0xA305	Maximum AC drive current	0% to 600%	150	%	Real time
A3-06	0xA306	AC drive hardware type	0: MD600A (CAN version) 4: MD600S (Modbus version)	0	-	Unchangeable
A3-51	0xA333	Module overtemperature threshold	0°C to 65535°C	0	°C	Unchangeable
A3-55	0xA337	Undervoltage threshold	150.0 V to 440.0 V	350.0	V	Real time
A3-56	0xA338	Valid undervoltage threshold	150.0 V to 440.0 V	350.0	V	Unchangeable
A3-57	0xA339	Overvoltage threshold	300.0 V to 820.0 V	820.0	V	Real time
A3-58	0xA33A	Valid overvoltage threshold	300.0 V to 820.0 V	820.0	V	Unchangeable
A4-00	0xA400	Braking unit action voltage	300.0 V to 820.0 V	760.0	V	At stop
A4-01	0xA401	Active braking unit action voltage	300.0 V to 820.0 V	760.0	V	Unchangeable
A4-11	0xA40B	Fan control mode	0: The fan works forwardly when the AC drive is running. In the stop state, the fan works when the temperature is higher than 42°C. 1: The fan works forwardly. 2: The fan works forwardly or reversely when the AC drive is running. In the stop state, the fan works when the temperature is higher than 42°C. 3: The fan always works forwardly or reversely. 4: Speed digital setting 5: Intelligent fan mode	0	-	Real time
A4-12	0xA40C	Digital setting of fan speed	1500 RPM to 14000 RPM	1500	RPM	Real time
A4-13	0xA40D	Valid value of digital setting for fan speed	1500 RPM to 14000 RPM	1500	RPM	Unchangeable
A4-14	0xA40E	Forward running time of fan in forward/reverse running mode	60s to 65535s	60	s	Real time

Parameter Code	Communication Address	Parameter Name	Value	Default	Unit	Change Mode
A4-15	0xA40F	Reverse running time of fan in forward/reverse running mode	60s to 65535s	60	s	Real time
A5-00	0xA500	Maximum AC drive carrier frequency	0.0 kHz to 24.0 kHz	16.0	kHz	Unchangeable
A5-01	0xA501	Set carrier frequency	0.8 kHz to 20.0 kHz	4.0	kHz	Real time
A5-02	0xA502	Active carrier frequency	0.8 kHz to 20.0 kHz	4.0	kHz	Unchangeable
A6-01	0xA601	STOP/RESET key function	0: Valid only in operating panel control mode 1: Valid for ON_OFF1 command (start/stop) 2: Valid for OFF2 command (coast to stop) 3: Valid for OFF3 command (quick stop)	1	-	Real time

Parameter Code	Communication Address	Parameter Name	Value	Default	Unit	Change Mode
A6-03	0xA603	Parameter 1 displayed on LED operating panel during operation	Bit 0: Operating frequency (Hz) 0: Hidden 1: Displayed Bit 1: Set frequency (Hz) 0: Hidden 1: Displayed Bit 2: Bus voltage (V) 0: Hidden 1: Displayed Bit 3: Output voltage (V) 0: Hidden 1: Displayed Bit 4: Output current (A) 0: Hidden 1: Displayed Bit 5: Output power (kW) 0: Hidden 1: Displayed Bit 6: Output torque (%) 0: Hidden 1: Displayed Bit 7: DI input status 0: Hidden 1: Displayed Bit 8: DO output status 0: Hidden 1: Displayed Bit 9: AI1 voltage (V) 0: Hidden 1: Displayed Bit 10: Reserved Bit 11: Voltage (V) of potentiometer MD-BP-M : Hidden 1: Displayed Bit 12: Count value 0: Hidden 1: Displayed Bit 13: Length value 0: Hidden 1: Displayed Bit 14: Load speed 0: Hidden 1: Displayed Bit 15: PID setting 0: Hidden 1: Displayed	0x1F	-	Real time

Parameter Code	Communication Address	Parameter Name	Value	Default	Unit	Change Mode
A6-04	0xA604	Parameter 2 displayed on LED operating panel during operation	Bit 0: PID feedback 0: Hidden 1: Displayed Bit 1: PLC stage 0: Hidden 1: Displayed Bit 2: Pulse input frequency (kHz) 0: Hidden 1: Displayed Bit 3: Operating frequency 2 (Hz) 0: Hidden 1: Displayed Bit 4: Remaining running time 0: Hidden 1: Displayed Bit 5: Voltage before AI1 correction (V) 0: Hidden 1: Displayed Bit 6: Free mapping 0 0: Hidden 1: Displayed Bit 7: Free mapping 1 0: Hidden 1: Displayed Bit 8: Motor speed 0: Hidden 1: Displayed Bit 9: Current power-on time (hour) 0: Hidden 1: Displayed Bit 10: Current running time (min.) 0: Hidden 1: Displayed Bit 11: Pulse input frequency (Hz) 0: Hidden 1: Displayed Bit 12: Communication set value 0: Hidden 1: Displayed Bit 13: Encoder feedback speed 0: Hidden 1: Displayed Bit 14: Main frequency X 0: Hidden 1: Displayed Bit 15: Auxiliary frequency Y 0: Hidden 1: Displayed	0	-	Real time

Parameter Code	Communication Address	Parameter Name	Value	Default	Unit	Change Mode
A6-05	0xA605	Parameter displayed on the LED operating panel upon stop	Bit 0: Set frequency (Hz) 0: Hidden 1: Displayed Bit 1: Bus voltage (V) 0: Hidden 1: Displayed Bit 2: DI input state 0: Hidden 1: Displayed Bit 3: DO output state 0: Hidden 1: Displayed Bit 4: AI1 voltage (V) 0: Hidden 1: Displayed Bit 5: Reserved Bit 6: Voltage (V) of potentiometer MD-BP-M 0: Hidden 1: Displayed Bit 7: Count value 0: Hidden 1: Displayed Bit 8: Length value 0: Hidden 1: Displayed Bit 9: PLC stage 0: Hidden 1: Displayed Bit 10: Load speed 0: Hidden 1: Displayed Bit 11: PID setting 0: Hidden 1: Displayed Bit 12: Pulse input frequency (kHz) 0: Hidden 1: Displayed Bit 13: Reserved Bit 14: Free mapping 0 0: Hidden 1: Displayed Bit 15: Free mapping 1 0: Hidden 1: Displayed	0x33	-	Real time
A6-07	0xA607	Address displayed by free mapping 0	0: Invalid address Others: K connector	0	-	Real time

Parameter Code	Communication Address	Parameter Name	Value	Default	Unit	Change Mode
A6-08	0xA608	Format displayed by free mapping 0	Ones: Unit 0: None 1: Hz 2: A 3: RPM 4: V 5: Link 6: % 7: s 8: h 9: kW 10: kW/h 11: °C Tens: Number of decimal places 0: 0 1: 1 2: 2 3: 3 4: 4 Hundreds: Settings of the ones and tens places 0: Invalid 1: Valid	0	-	Real time
A6-09	0xA609	Address displayed by free mapping 1	0: Invalid address Others: K connector	0	-	Real time

Parameter Code	Communication Address	Parameter Name	Value	Default	Unit	Change Mode
A6-10	0xA60A	Format displayed by free mapping 1	Ones: Unit 0: None 1: Hz 2: A 3: RPM 4: V 5: Link 6: % 7: s 8: h 9: kW 10: kW/h 11: °C Tens: Number of decimal places 0: 0 1: 1 2: 2 3: 3 4: 4 Hundreds: Settings of the ones and tens places 0: Invalid 1: Valid	0	-	Real time
A6-15	0xA60F	Number of decimal places of floating connector	0: Two decimal places 1: One decimal place	1	-	Real time
A6-16	0xA610	LED display of direction	Ones: Direction display at stop 0: Not displayed 1: Displayed Tens: Running direction determination base 0: Output frequency 1: Feedback frequency	1	-	Real time
A6-17	0xA611	LED display update cycle	10 ms to 300 ms	10	ms	Real time
A6-18	0xA612	Error pop-up time	1s to 60s	10	s	Real time
A6-20	0xA614	LED operating panel key test	0: Inactive 1: Active	0	-	At stop
A6-21	0xA615	Key test result	0 to 65535	0	-	Unchangeable

Parameter Code	Communication Address	Parameter Name	Value	Default	Unit	Change Mode
A6-22	0xA616	LED default display check	0: Disable 1: All indicators on the LED operating panel are steady on. 2: All indicators on the LED operating panel are off. 3: All indicators on the LED operating panel blink.	0	-	At stop
A6-36	0xA624	MD-BP-M potentiometer gain	-10.00 to 10.00	1.00	-	Real time
A6-37	0xA625	Potentiometer MD-BP-M offset	-10.00 V to 10.00 V	0.00	V	Real time
A6-38	0xA626	Denoising threshold of potentiometer MD-BP-M	0.0% to 100.0%	0.1	%	Real time
A6-40	0xA628	Dead zone width of potentiometer MD-BP-M	0.0% to 100.0%	0.2	%	Real time
A6-41	0xA629	Jump point set by potentiometer MD-BP-M	-100.0% to 100.0%	0.0	%	Real time
A6-42	0xA62A	Jump amplitude set by potentiometer MD-BP-M	0.0% to 100.0%	0.1	%	Real time
A6-43	0xA62B	Filter time of potentiometer MD-BP-M	0 ms to 65535 ms	100	ms	Real time
A6-44	0xA62C	Number of filter times of potentiometer MD-BP-M	0 to 64	32	-	Real time
A8-00	0xA800	Start/Stop of background oscilloscope	0 to 2	0	-	Real time
A8-01	0xA801	Channel 1 parameter	0 to 2000	0	-	Real time
A8-02	0xA802	Channel 2 parameter	0 to 2000	0	-	Real time
A8-03	0xA803	Channel 3 parameter	0 to 2000	0	-	Real time
A8-04	0xA804	Channel 4 parameter	0 to 2000	0	-	Real time
A8-05	0xA805	Sampling interval	1 to 65535	1	-	Real time
A8-06	0xA806	Triggering object A	0 to 2000	1	-	Real time

Parameter Code	Communication Address	Parameter Name	Value	Default	Unit	Change Mode
A8-07	0xA807	Triggering condition A	0: > 1: = 2: <	0	-	Real time
A8-08	0xA808	Triggering level A	-32768 to 32767	0	-	Real time
A8-09	0xA809	Triggering object B	0 to 2000	1	-	Real time
A8-10	0xA80A	Triggering condition B	0: > 1: = 2: <	0	-	Real time
A8-11	0xA80B	Triggering level B	-32768 to 32767	0	-	Real time
A8-12	0xA80C	Triggering condition selection	0: Triggered when triggering condition A is met 1: Triggered when triggering condition B is met 2: Triggered when triggering conditions A and B are met 3: Triggered when triggering condition A or B is met	0	-	Real time
A8-13	0xA80D	Carrier frequency cycle during data storage	0 to 65535	0	-	Unchangeable
A8-14	0xA80E	Fault value	0 to 65535	0	-	Unchangeable
A8-15	0xA80F	Data saving cycle	0: Carrier frequency cycle 1: 0.5 ms 2: 2 ms	0	-	Real time
A8-18	0xA812	Pre-triggering value of oscilloscope	0% to 100%	50	%	Real time
Ad-00	0xAD00	Cumulative running time (h)	0 h to 65535 h	0	h	Unchangeable
Ad-01	0xAD01	Cumulative running time (s)	0s to 3599s	0	s	Unchangeable
Ad-02	0xAD02	Cumulative power-on time (h)	0 h to 65535 h	0	h	Unchangeable
Ad-03	0xAD03	Cumulative power-on time (s)	0s to 3599s	0	s	Unchangeable
Ad-04	0xAD04	Cumulative power consumption	0 kW·h to 65535 kW·h	0	kW·h	Unchangeable
Ad-05	0xAD05	Auxiliary calculation 1 of cumulative power consumption	0 to 65535	0	-	Unchangeable

Parameter Code	Communication Address	Parameter Name	Value	Default	Unit	Change Mode
Ad-06	0xAD06	Auxiliary calculation 2 of cumulative power consumption	0 to 65535	0	-	Unchangeable
Ad-07	0xAD07	Cumulative power consumption k	0.0 kW·h to 6553.5 kW·h	0.0	kW·h	Unchangeable
Ad-08	0xAD08	Cumulative power consumption M	0 MWh to 65535 MWh	0	MWh	Unchangeable
Ad-09	0xAD09	Cumulative energy auxiliary calculation 1	0 to 65535	0	-	Unchangeable
Ad-10	0xAD0A	Cumulative energy auxiliary calculation 2	0 to 65535	0	-	Unchangeable
Ad-11	0xAD0B	Cumulative energy saving K	0.0 kW·h to 999.9 kW·h	0.0	kW·h	Unchangeable
Ad-12	0xAD0C	Cumulative energy saving M	0 MWh to 999 MWh	0	MWh	Unchangeable
Ad-13	0xAD0D	Cumulative energy saving G	0 GWh to 65535 GWh	0	GWh	Unchangeable
Ad-14	0xAD0E	Cumulative cost saving	0.0 to 999.9	0.0	-	Unchangeable
Ad-15	0xAD0F	Cumulative cost saving K	0 to 65535	0	-	Unchangeable
Ad-16	0xAD10	Cumulative CO2 emission reduction (ton)	0.0 to 999.9	0.0	-	Unchangeable
Ad-17	0xAD11	Cumulative CO2 emission reduction (kiloton)	0 to 65535	0	-	Unchangeable
Ad-18	0xAD12	Energy tax rate 1	0.0-6553.5	0.0	-	At stop
Ad-19	0xAD13	Energy tax rate 2	0.0-6553.5	0.0	-	At stop
Ad-20	0xAD14	Tax rate	0: Energy tax rate 1 1: Energy tax rate 2	0	-	At stop
Ad-21	0xAD15	Currency unit	0: RMB 1: EUR 2: USD	0	-	At stop
Ad-22	0xAD16	CO2 conversion factor	0.000 to 65.535	0.000	-	At stop
Ad-23	0xAD17	Reference power	0.0 kW to 6553.5 kW	0.0	kW	At stop
Ad-24	0xAD18	Reset of cumulative energy calculation	0: Disable 1: Enable	0	-	At stop

Parameter Code	Communication Address	Parameter Name	Value	Default	Unit	Change Mode
AE-00	0x2F00	User-defined parameter 0	0 to 65535	0	-	Real time
AE-01	0x2F01	User-defined parameter 1	0 to 65535	0	-	Real time
AE-02	0x2F02	User-defined parameter 2	0 to 65535	0	-	Real time
AE-03	0x2F03	User-defined parameter 3	0 to 65535	0	-	Real time
AE-04	0x2F04	User-defined parameter 4	0 to 65535	0	-	Real time
AE-05	0x2F05	User-defined parameter 5	0 to 65535	0	-	Real time
AE-06	0x2F06	User-defined parameter 6	0 to 65535	0	-	Real time
AE-07	0x2F07	User-defined parameter 7	0 to 65535	0	-	Real time
AE-08	0x2F08	User-defined parameter 8	0 to 65535	0	-	Real time
AE-09	0x2F09	User-defined parameter 9	0 to 65535	0	-	Real time
AE-10	0x2F0A	User-defined parameter 10	0 to 65535	0	-	Real time
AE-11	0x2F0B	User-defined parameter 11	0 to 65535	0	-	Real time
AE-12	0x2F0C	User-defined parameter 12	0 to 65535	0	-	Real time
AE-13	0x2F0D	User-defined parameter 13	0 to 65535	0	-	Real time
AE-14	0x2F0E	User-defined parameter 14	0 to 65535	0	-	Real time
AE-15	0x2F0F	User-defined parameter 15	0 to 65535	0	-	Real time
AE-16	0x2F10	User-defined parameter 16	0 to 65535	0	-	Real time
AE-17	0x2F11	User-defined parameter 17	0 to 65535	0	-	Real time
AE-18	0x2F12	User-defined parameter 18	0 to 65535	0	-	Real time
AE-19	0x2F13	User-defined parameter 19	0 to 65535	0	-	Real time
AE-20	0x2F14	User-defined parameter 20	0 to 65535	0	-	Real time

Parameter Code	Communication Address	Parameter Name	Value	Default	Unit	Change Mode
AE-21	0x2F15	User-defined parameter 21	0 to 65535	0	-	Real time
AE-22	0x2F16	User-defined parameter 22	0 to 65535	0	-	Real time
AE-23	0x2F17	User-defined parameter 23	0 to 65535	0	-	Real time
AE-24	0x2F18	User-defined parameter 24	0 to 65535	0	-	Real time
AE-25	0x2F19	User-defined parameter 25	0 to 65535	0	-	Real time
AE-26	0x2F1A	User-defined parameter 26	0 to 65535	0	-	Real time
AE-27	0x2F1B	User-defined parameter 27	0 to 65535	0	-	Real time
AE-28	0x2F1C	User-defined parameter 28	0 to 65535	0	-	Real time
AE-29	0x2F1D	User-defined parameter 29	0 to 65535	0	-	Real time
AE-30	0x2F1E	User-defined parameter 30	0 to 65535	0	-	Real time
AE-31	0x2F1F	User-defined parameter 31	0 to 65535	0	-	Real time
U0-00	0x7000	Operating frequency	0.00 Hz to 600.00 Hz	0.00	Hz	Unchangeable
U0-01	0x7001	Frequency reference	0.00 Hz to 600.00 Hz	0.00	Hz	Unchangeable
U0-02	0x7002	Bus voltage	0.0 V to 6553.5 V	0.0	V	Unchangeable
U0-03	0x7003	Output voltage	0 V to 65535 V	0	V	Unchangeable
U0-04	0x7004	Output current	0.00 A to 655.35 A	0.00	A	Unchangeable
U0-05	0x7005	Output power	-3276.8 kW to 3276.7 kW	0.0	kW	Unchangeable
U0-06	0x7006	Output torque	-3276.8% to 3276.7%	0.0	%	Unchangeable

Parameter Code	Communication Address	Parameter Name	Value	Default	Unit	Change Mode
U0-07	0x7007	DI input state	Bit 0: DI1 state 0: Low level 1: High level Bit 1: DI2 state 0: Low level 1: High level Bit 2: DI3 state 0: Low level 1: High level Bit 3: DI4/HDI state 0: Low level 1: High level Bit 4: DI5 state (MD600 A) 0: Low level 1: High level Bit 5: Reserved 0: Low level 1: High level Bit 6: Reserved 0: Low level 1: High level Bit 7: Reserved 0: Low level 1: High level Bit 8: Reserved 0: Low level 1: High level Bit 9: Reserved 0: Low level 1: High level Bit 10: VDI1 state 0: Low level 1: High level Bit 11: VDI2 state 0: Low level 1: High level Bit 12: VDI3 state 0: Low level 1: High level Bit 13: VDI4 state 0: Low level 1: High level Bit 14: VDI5 state 0: Low level 1: High level Bit 15: VDI6 state 0: Low level 1: High level	0	-	Unchangeable

Parameter Code	Communication Address	Parameter Name	Value	Default	Unit	Change Mode
U0-08	0x7008	DO output state	Bit 0: RO1 state 0: Low level 1: High level Bit 1: Reserved 0: Low level 1: High level Bit 2: Reserved 0: Low level 1: High level Bit 3: Reserved 0: Low level 1: High level Bit 4: DO1 state (MD600A) 0: Low level 1: High level Bit 5: DO2 state (MD600A) 0: Low level 1: High level Bit 6: Reserved 0: Low level 1: High level Bit 7: Reserved 0: Low level 1: High level Bit 8: Reserved 0: Low level 1: High level Bit 9: Reserved 0: Low level 1 : High level Bit 10: VDO1 state 0: Low level 1: High level Bit 11: VDO2 state 0: Low level 1: High level Bit 12: VDO3 state 0: Low level 1: High level Bit 13: VDO4 state 0: Low level 1: High level Bit 14: VDO5 state 0: Low level 1: High level Bit 15: VDO6 state 0: Low level 1: High level	0	-	Unchangeable

Parameter Code	Communication Address	Parameter Name	Value	Default	Unit	Change Mode
U0-09	0x7009	AI1 voltage	-10.57 V to 10.57 V	0.00	V	Unchangeable
U0-12	0x700C	Counting value	0 to 65535	0	-	Unchangeable
U0-13	0x700D	Length value	0 to 65535	0	-	Unchangeable
U0-14	0x700E	Load speed display	0 RPM to 65535 RPM	0	RPM	Unchangeable
U0-15	0x700F	PID reference	0 to 65535	0	-	Unchangeable
U0-16	0x7010	PID feedback	0 to 65535	0	-	Unchangeable
U0-17	0x7011	PLC stage	0 to 65535	0	-	Unchangeable
U0-18	0x7012	Pulse input frequency	0.00 kHz to 20.00 kHz	0.00	kHz	Unchangeable
U0-19	0x7013	Feedback speed	-500.00 Hz to 600.00 Hz	0.00	Hz	Unchangeable
U0-20	0x7014	Remaining running time	0.0 min to 65535.0 min	0.0	min	Unchangeable
U0-21	0x7015	AI1 voltage before correction	-10.570 V to 10.570 V	0.000	V	Unchangeable
U0-24	0x7018	Motor velocity	0 RPM to 65535 RPM	0	RPM	Unchangeable
U0-25	0x7019	Current power-on time	0 min to 65535 min	0	min	Unchangeable
U0-26	0x701A	Current running time	0.0 min to 6553.5 min	0.0	min	Unchangeable
U0-27	0x701B	Pulse input frequency	0 Hz to 20000 Hz	0	Hz	Unchangeable
U0-28	0x701C	Communication setpoint	-300.00% to 300.00%	0.00	%	Unchangeable
U0-30	0x701E	Digital setting of main frequency	-327.68 Hz to 327.67 Hz	0.00	Hz	Unchangeable
U0-31	0x701F	Digital setting of auxiliary frequency	-327.68 Hz to 327.67 Hz	0.00	Hz	Unchangeable
U0-32	0x7020	Memory address view	0 to 65535	0	-	Unchangeable
U0-35	0x7023	Target torque	-200.0% to 200.0%	0.0	%	Unchangeable
U0-37	0x7025	Power factor angle	-3276.8° to 3276.7°	0.0	°	Unchangeable
U0-39	0x7027	Target voltage upon V/f separation	0 V to 65535 V	0	V	Unchangeable

Parameter Code	Communication Address	Parameter Name	Value	Default	Unit	Change Mode
U0-40	0x7028	Output voltage upon V/f separation	0 V to 65535 V	0	V	Unchangeable
U0-45	0x702D	Fault code	0.0-6553.5	0.0	-	Unchangeable
U0-46	0x702E	Minor fault code	0.0-6553.5	0.0	-	Unchangeable
U0-47	0x702F	Alarm code	0.0-6553.5	0.0	-	Unchangeable
U0-48	0x7030	Prompt code	0.0-6553.5	0.0	-	Unchangeable
U0-49	0x7031	Set fan speed	0 RPM to 65535 RPM	0	RPM	Unchangeable
U0-50	0x7032	Actual fan speed	-32768 RPM to +32767 RPM	0	RPM	Unchangeable
U0-51	0x7033	Adjustment of UP/DOWN key or terminal functioning as UP/DOWN key	-327.68 Hz to 327.67 Hz	0.00	Hz	Unchangeable
U0-52	0x7034	Fan initialization flag	0 to 65535	0	-	Unchangeable
U0-53	0x7035	Voltage of potentiometer MD-BP-M after filtering	-32.767 V to 32.767 V	0.000	V	Unchangeable
U0-54	0x7036	Voltage of potentiometer MD-BP-M after correction	-327.67 V to 327.67 V	0.00	V	Unchangeable
U0-55	0x7037	Curve input value of potentiometer MD-BP-M	-327.67 V to 327.67 V	0.00	V	Unchangeable
U0-56	0x7038	Output per-unit value of potentiometer MD-BP-M	0.00% to 655.35%	0.00	%	Unchangeable
U0-57	0x7039	Voltage of potentiometer MD-BP-M	-10.57 V to 10.57 V	0.00	V	Unchangeable
U0-59	0x703B	Frequency reference	-3276.8% to 3276.7%	0.0	%	Unchangeable
U0-60	0x703C	Operating frequency	-3276.8% to 3276.7%	0.0	%	Unchangeable

Parameter Code	Communication Address	Parameter Name	Value	Default	Unit	Change Mode
U0-61	0x703D	AC drive state 1	1: Forward running 2: Reverse running 3: Stopped 4: Auto-tuning 5: Faulty	0	-	Unchangeable
U0-65	0x7041	Torque upper limit	-2000.0% to 2000.0%	0.0	%	Unchangeable
U0-68	0x7044	AC drive state 2	0 to 65535	0	-	Unchangeable
U0-69	0x7045	AC drive running frequency 2 (signed)	-327.67 Hz to 327.67 Hz	0.00	Hz	Unchangeable
U0-70	0x7046	Motor running speed 2 (signed)	-32768 RPM to +32767 RPM	0	RPM	Unchangeable
U0-71	0x7047	Output current display 2	0.0 A to 6553.5 A	0.0	A	Unchangeable
U0-74	0x704A	AC drive output torque	-200.0% to 200.0%	0.0	%	Unchangeable
U0-75	0x704B	AC drive running frequency 3 (unsigned)	0.00 Hz to 655.35 Hz	0.00	Hz	Unchangeable
U0-76	0x704C	Low-order bits of cumulative power consumption	0.0 kW·h to 6553.5 kW·h	0.0	kW·h	Unchangeable
U0-77	0x704D	High-order bits of cumulative power consumption	0 kW·h to 65535 kW·h	0	kW·h	Unchangeable
U2-01	0x7201	Current control channel	0: Control channel 1 1: Control channel 2	0	-	Unchangeable
U2-02	0x7202	Current set channel	0: Set channel 1 1: Set channel 2	0	-	Unchangeable
U2-03	0x7203	Jump frequency flag	0 to 65535	0	-	Unchangeable
U2-04	0x7204	Local/remote	0: Remote 1: Local	0	-	Unchangeable
U2-05	0x7205	Current multi-speed selection	0 to 65535	0	-	Unchangeable
U2-06	0x7206	Current multi-speed effective value	-3276.7% to 3276.7%	0.0	%	Unchangeable
U2-07	0x7207	Key value	0 to 65535	0	-	Unchangeable
U2-08	0x7208	Power-off time	0 to 65535	0	-	Unchangeable

Parameter Code	Communication Address	Parameter Name	Value	Default	Unit	Change Mode
U2-09	0x7209	Incorrect internal index address of 16-bit parameter	0–0xFFFF	0	-	Unchangeable
U2-10	0x720A	Error type of 16-bit parameter	0 to 65535	0	-	Unchangeable
U2-11	0x720B	Internal index address 1 of error-causing 32-bit parameter	0 to 65535	0	-	Unchangeable
U2-12	0x720C	Internal index address 2 of error-causing 32-bit parameter	0 to 65535	0	-	Unchangeable
U2-13	0x720D	Fault and limit severity	0 to 65535	0	-	Unchangeable
U2-14	0x720E	Fault automatic reset and restart step	0 to 65535	0	-	Unchangeable
U2-23	0x7217	Parameter setting error	0 to 65535	0	-	Unchangeable
U2-24	0x7218	Macro parameter backup error	0 to 65535	0	-	Unchangeable
U2-25	0x7219	Remaining running time view	0.0 min to 6553.5 min	0.0	min	Unchangeable
U2-26	0x721A	Parameter record information 0	0 to 65535	0	-	Unchangeable
U2-27	0x721B	Parameter record information 1	0 to 65535	0	-	Unchangeable
U2-28	0x721C	Parameter record information 2	0 to 65535	0	-	Unchangeable
U2-29	0x721D	Parameter record information 3	0 to 65535	0	-	Unchangeable
U2-30	0x721E	Parameter record information 4	0 to 65535	0	-	Unchangeable
U2-31	0x721F	Parameter record information 5	0 to 65535	0	-	Unchangeable
U2-32	0x7220	Parameter record information 6	0 to 65535	0	-	Unchangeable
U2-33	0x7221	Parameter record information 7	0 to 65535	0	-	Unchangeable
U2-34	0x7222	Parameter record information 8	0 to 65535	0	-	Unchangeable
U2-35	0x7223	Parameter record information 9	0 to 65535	0	-	Unchangeable

Parameter Code	Communication Address	Parameter Name	Value	Default	Unit	Change Mode
U2-36	0x7224	Parameter record information 10	0 to 65535	0	-	Unchangeable
U2-37	0x7225	Parameter record information 11	0 to 65535	0	-	Unchangeable
U2-38	0x7226	Parameter record information 12	0 to 65535	0	-	Unchangeable
U2-39	0x7227	Parameter record information 13	0 to 65535	0	-	Unchangeable
U2-40	0x7228	Parameter record information 14	0 to 65535	0	-	Unchangeable
U2-41	0x7229	Parameter record information 15	0 to 65535	0	-	Unchangeable
U2-42	0x722A	Parameter record information 16	0 to 65535	0	-	Unchangeable
U2-43	0x722B	Parameter record information 17	0 to 65535	0	-	Unchangeable
U2-44	0x722C	Parameter record information 18	0 to 65535	0	-	Unchangeable
U2-45	0x722D	Parameter record information 19	0 to 65535	0	-	Unchangeable
U2-46	0x722E	Parameter record information 20	0 to 65535	0	-	Unchangeable
U2-47	0x722F	Parameter record information 21	0 to 65535	0	-	Unchangeable
U2-48	0x7230	Parameter record information 22	0 to 65535	0	-	Unchangeable
U2-49	0x7231	Parameter record information 23	0 to 65535	0	-	Unchangeable
U2-50	0x7232	Parameter record information 24	0 to 65535	0	-	Unchangeable
U2-51	0x7233	Parameter record information 25	0 to 65535	0	-	Unchangeable
U2-52	0x7234	Parameter record information 26	0 to 65535	0	-	Unchangeable
U2-59	0x723B	Wobble frequency acceleration/ deceleration timeout flag	0 to 65535	0	-	Unchangeable
U2-60	0x723C	Address mapping enabling state	0 to 65535	0	-	Unchangeable
U2-62	0x723E	Automatic reset command flag for communication fault	0 to 65535	0	-	Unchangeable

Parameter Code	Communication Address	Parameter Name	Value	Default	Unit	Change Mode
U2-63	0x723F	Communication warning flag	0 to 65535	0	-	Unchangeable
U2-64	0x7240	Internal index address of error-causing 16-bit parameter	0 to 65535	0	-	Unchangeable
U2-65	0x7241	Power-on initialization completion flag	0 to 65535	0	-	Unchangeable
U2-66	0x7242	Model-related parameter update flag	0 to 65535	0	-	Unchangeable
U2-67	0x7243	Flag of invalid restoration for backup parameter	0 to 65535	0	-	Unchangeable
U3-00	0x7300	LCD command word	0–0xFFFF	0	-	Unchangeable
U3-01	0x7301	Remote call	0 to 65535	0	-	Unchangeable
U3-02	0x7302	IDS command word	0–0xFFFF	0	-	Unchangeable
U3-03	0x7303	Command used by software to obtain control permission	0 to 65535	0	-	Unchangeable
U3-07	0x7307	LED control word	0–0xFFFF	0	-	Unchangeable
U3-08	0x7308	Background control word	0–0xFFFF	0	-	Unchangeable
U3-09	0x7309	SOP control word	0–0xFFFF	0	-	Unchangeable
U3-16	0x7310	Communication speed setting value 2 (0x7310)	0 to 65535	0	-	Unchangeable
U3-17	0x7311	Communication control command 2 (0x7311)	0–0xFFFF	0	-	Unchangeable
U3-18	0x7312	DO state setting (DO function setting source: communication)	0 to 65535	0	-	Unchangeable
U3-19	0x7313	AO1 output (AO1 function setting source: communication)	0% to 65535%	0	%	Unchangeable

Parameter Code	Communication Address	Parameter Name	Value	Default	Unit	Change Mode
U3-23	0x7317	Monitoring of communication speed setting value 1 (0x1000)	-32768 to 32767	0	-	Unchangeable
U3-28	0x731C	Communication status word	0 to 65535	0	-	Unchangeable
U3-33	0x7321	Communication control command 1 (0x7321)	0–0xFFFF	0	-	Unchangeable
U3-50	0x7332	Fault code reading	0 to 65535	0	-	Unchangeable
U3-51	0x7333	Fault sub-code reading	0 to 65535	0	-	Unchangeable
U3-52	0x7334	Minor fault code reading	0 to 65535	0	-	Unchangeable
U3-53	0x7335	Minor fault sub-code reading	0 to 65535	0	-	Unchangeable
U3-54	0x7336	Warning code reading	0 to 65535	0	-	Unchangeable
U3-55	0x7337	Warning sub-code reading	0 to 65535	0	-	Unchangeable
U3-56	0x7338	Prompt code reading	0 to 65535	0	-	Unchangeable
U3-57	0x7339	Prompt sub-code reading	0 to 65535	0	-	Unchangeable

19012337A01

Copyright © Shenzhen Inovance Technology Co., Ltd.

Shenzhen Inovance Technology Co., Ltd.

www.inovance.com

Add.: Inovance Headquarters Tower, High-tech Industrial Park,
Guanlan Street, Longhua New District,
Shenzhen 518000, P.R. China
Tel: (0755) 2979 9595 Fax: (0755) 2961 9897

Suzhou Inovance Technology Co., Ltd.

www.inovance.com

Add.: No.52, Tian'e Dang Road, Wuzhong District,
Suzhou 215104, P.R. China
Tel: (0512) 6637 6666 Fax: (0512) 6285 6720