INOVANCE

FORWARD, ALWAYS PROGRESSING

MD800 Series AC Drive (Multidrive System)

Quick Installation and Commissioning Guide

Industrial Automation

Intelligent Elevator

New Energy Vehicle

Industrial Robot

Rail Transit

Data code 19011494 A02

Preface

Introduction

The MD800 series AC drive is a new generation of standard AC drive (multidrive system) designed for low-power and multidrive applications in the traditional OEM industry. It is widely applied in industries such as printing and packaging, woodworking machine tools, food and beverage, logistics and warehousing, textile printing and dyeing, fans and pumps.

This guide describes the installation, wiring, quick commissioning, commissioning parameters, and troubleshooting of the MD800 series product.

More Documents

Document Name	Description
MD800 Series AC Drive (Multidrive System) Design and Selection Guide	Describes the system composition, technical specifications, and dimensions of the AC drive, specific specifications and selection of options (including installation accessories, cables, and peripheral electrical components), common EMC problems and solutions, and certifications and standards.
MD800 Series AC Drive (Multidrive System) Maintenance Guide	Describes the routine maintenance, component replacement, and troubleshooting of the product.
MD800 Series AC Drive (Multidrive System) Function Guide	Describes the commissioning tools, system commissioning procedures, parameters, fault codes, and product functions and applications.
MD800 Series AC Drive (Multidrive System) Communication Guide	Describes the communication mode, communication networking, and communication configuration of the product.

Revision History

Date	Version	Description
March 2021	A00	First release
July 2021	A01	Modified for version consistency.
November 2021	A02	Modified the fault codes and commissioning parameters.

Document Acquisition

This guide is not delivered with the AC drive. You can obtain the PDF version of this document using the following method:

Log in to Inovance's website (*http://en.inovance.cn/*), choose Support > Download, perform keyword search, and download the PDF file.

Table of Contents

Preface 1

Fundamental Safety Instructions 3

1 Unpacking and Transportation 9

1.1 Inspection upon Unpacking 9

1.2 Transportation and Handling 10

1.3 Storage Requirements 10

2 Preparations Before Installation 12

2.1 Installation Procedure 12

2.2 Installation Environment 13

2.3 Installation Tools 14

2.3.1 Mechanical Installation Tools 14

2.3.2 Cables 16

2.3.3 Accessory Kit 16

3 Installation and Wiring 17

3.1 Mechanical Installation 17

3.1.1 Installing the Power Supply Unit 17

3.1.2 Installing the Drive Unit 18

3.1.3 Installing Options 19

3.1.3.1 Expansion Card 19

3.1.3.2 Filter Unit 20

3.2 Electrical Installation 22

3.2.1 Inspection Before Wiring 22

3.2.2 Wiring 22

3.2.3 Wiring with EMC Shielded Brackets (Optional) 26

3.2.4 Inspection After Wiring 30

3.2.5 System Grounding 31

4 Commissioning and Trial Run 33

4.1 Basic Commissioning Procedure 33

4.2 Commissioning Procedure Under V/f Control 34

4.3 Commissioning Procedure Under SVC 35

4.4 Commissioning Procedure Under PMVVC 36

4.5 List of Function Parameters 37

4.6 List of Fault Codes 112

Appendix Electrical Wiring 126

Fundamental Safety Instructions

Safety Precautions

1. This chapter presents essential safety instructions for a proper use of the equipment. Before operating the equipment, read through the guide and comprehend all the safety instructions. Failure to comply with the safety instructions may result in death, severe personal injuries, or equipment damage.
2. "CAUTION", "WARNING", and "DANGER" items in the guide only indicate some of the precautions that need to be followed; they just supplement the safety precautions.
3. Use this equipment according to the designated environment requirements. Damage caused by improper use is not covered by warranty.
4. Inovance shall take no responsibility for any personal injuries or property damage caused by improper use.

Safety Levels and Definitions

DANGER	Indicates that failure to comply with the notice will result in death or severe personal injuries.
WARNING	Indicates that failure to comply with the notice may result in death or severe personal injuries.
CAUTION	Indicates that failure to comply with the notice may result in minor or moderate personal injuries or equipment damage.

General Safety Instructions

- Drawings in the guide are sometimes shown without covers or protective guards. Remember to install the covers or protective guards as specified first, and then perform operations in accordance with the instructions.
- The drawings in the guide are shown for illustration only and may be different from the product you purchased.

Unpacking
WARNING • Do not install the equipment if you find damage, rust, or signs of use on the equipment or accessories upon unpacking. • Do not install the equipment if you find water seepage or missing or damaged components upon unpacking. • Do not install the equipment if you find the packing list does not conform to the equipment you received.

CAUTION

- Check whether the packing is intact and whether there is damage, water seepage, dampness, and deformation before unpacking.
- Unpack the package by following the unpacking sequence. Do not strike the package violently.
- Check whether there is damage, rust, or injuries on the surface of the equipment and equipment accessories before unpacking.
- Check whether the package contents are consistent with the packing list before unpacking.

Storage and Transportation

WARNING

- Large-scale or heavy equipment must be transported by qualified professionals using specialized hoisting equipment. Failure to comply may result in personal injuries or equipment damage.
- Before hoisting the equipment, ensure the equipment components such as the front cover and terminal blocks are secured firmly with screws. Loosely-connected components may fall off and result in personal injuries or equipment damage.
- Never stand or stay below the equipment when the equipment is being hoisted by the hoisting equipment.
- When hoisting the equipment with a steel rope, ensure the equipment is hoisted at a constant speed without suffering from vibration or shock. Do not turn the equipment over or let the equipment stay hanging in the air. Failure to comply may result in personal injuries or equipment damage.

CAUTION

- Handle the equipment with care during transportation and mind your steps to prevent personal injuries or equipment damage.
- When carrying the equipment with bare hands, hold the equipment casing firmly with care to prevent parts from falling. Failure to comply may result in personal injuries.
- Store and transport the equipment based on the storage and transportation requirements. Failure to comply will result in equipment damage.
- Avoid storing or transporting the equipment in environments with water splash, rain, direct sunlight, strong electric field, strong magnetic field, and strong vibration.
- Avoid storing the equipment for more than three months. Long-term storage requires stricter protection and necessary inspections.
- Pack the equipment strictly before transportation. Use a sealed box for long-distance transportation.
- Never transport the equipment with other equipment or materials that may harm or have negative impacts on this equipment.

Installation

DANGER

- The equipment must be operated only by professionals with electrical knowledge.

WARNING

- Read through the guide and safety instructions before installation.
- Do not install this equipment in places with strong electric or magnetic fields.
- Before installation, check that the mechanical strength of the installation site can bear the weight of the equipment. Failure to comply will result in mechanical hazards.
- Do not wear loose clothes or accessories during installation. Failure to comply may result in an electric shock.
- When installing the equipment in a closed environment (such as a cabinet or casing), use a cooling device (such as a fan or air conditioner) to cool the environment down to the required temperature. Failure to comply may result in equipment over-temperature or a fire.
- Do not retrofit the equipment.
- Do not fiddle with the bolts used to fix equipment components or the bolts marked in red.
- When the equipment is installed in a cabinet or final assembly, a fireproof enclosure providing both electrical and mechanical protections must be provided. The IP rating must meet IEC standards and local laws and regulations.
- Before installing devices with strong electromagnetic interference, such as a transformer, install a shielding device for the equipment to prevent malfunction.
- Install the equipment onto an incombustible object such as a metal. Keep the equipment away from combustible objects. Failure to comply will result in a fire.

CAUTION

- Cover the top of the equipment with a piece of cloth or paper during installation. This is to prevent unwanted objects such as metal chippings, oil, and water from falling into the equipment and causing faults. After installation, remove the cloth or paper on the top of the equipment to prevent over-temperature caused by poor ventilation due to blocked ventilation holes.
- Resonance may occur when the equipment operating at a constant speed executes variable speed operations. In this case, install the vibration-proof rubber under the motor frame or use the vibration suppression function to reduce resonance.

Wiring

DANGER

- Equipment installation, wiring, maintenance, inspection, or parts replacement must be performed only by professionals.
- Before wiring, cut off all the power supplies of the equipment, and wait for at least the time designated on the equipment warning label before further operations because residual voltage still exists after power-off. After waiting for the designated time, measure the DC voltage in the main circuit to ensure the DC voltage is within the safe voltage range. Failure to comply will result in an electric shock.
- Do not perform wiring, remove the equipment cover, or touch the circuit board with power ON. Failure to comply will result in an electric shock.
- Check that the equipment is grounded properly. Failure to comply will result in an electric shock.

WARNING

- Do not connect the input power supply to the output end of the equipment. Failure to comply will result in equipment damage or even a fire.
- When connecting a drive to the motor, check that the phase sequences of the drive and motor terminals are consistent to prevent reverse motor rotation.
- Cables used for wiring must meet cross sectional area and shielding requirements. The shield of the cable must be reliably grounded at one end.
- Fix the terminal screws with the tightening torque specified in the guide. Improper tightening torque may overheat or damage the connecting part, resulting in a fire.
- After wiring is done, check that all cables are connected properly, with no screws, washers, or exposed cables left inside the equipment. Failure to comply may result in an electric shock or equipment damage.

CAUTION

- During wiring, follow the proper electrostatic discharge (ESD) procedure, and wear an antistatic wrist strap. Failure to comply will damage the equipment or the internal circuits of the equipment.
- Use shielded twisted pairs for the control circuit. Connect the shield to the grounding terminal of the equipment for grounding purpose. Failure to comply will result in equipment malfunction.

Power-on

DANGER

- Before power-on, check that the equipment is installed properly with reliable wiring and the motor can be restarted.
- Check that the power supply meets equipment requirements before power-on to prevent equipment damage or a fire.
- After power-on, do not open the cabinet door or protective cover of the equipment, touch any terminal, or disassemble any unit or component of the equipment. Failure to comply will result in an electric shock.

WARNING

- Perform a trial run after wiring and parameter setting to ensure the equipment operates safely. Failure to comply may result in personal injuries or equipment damage.
- Before power-on, check that the rated voltage of the equipment is consistent with that of the power supply. Failure to comply may result in a fire.
- Before power-on, check that no one is near the equipment, motor, or machine. Failure to comply may result in death or personal injuries.

Operation

DANGER

- The equipment must be operated only by professionals. Failure to comply will result in death or personal injuries.
- Do not touch any connecting terminals or disassemble any unit or component of the equipment during operation. Failure to comply will result in an electric shock.

WARNING

- Do not touch the equipment casing, fan, or resistor with bare hands to feel the temperature. Failure to comply may result in personal injuries.
- Prevent metal or other objects from falling into the equipment during operation. Failure to comply may result in a fire or equipment damage.

Maintenance

DANGER

- Equipment installation, wiring, maintenance, inspection, or parts replacement must be performed only by professionals.
- Do not maintain the equipment with power ON. Failure to comply will result in an electric shock.
- Before maintenance, cut off all the power supplies of the equipment and wait for at least the time designated on the equipment warning label.
- In case of a permanent magnet motor, do not touch the motor terminals immediately after power-off because the motor terminals will generate induced voltage during rotation even after the equipment power supply is off. Failure to comply will result in an electric shock.

WARNING

- Perform routine and periodic inspection and maintenance on the equipment according to maintenance requirements and keep a maintenance record.

Repair

DANGER

- Equipment installation, wiring, maintenance, inspection, or parts replacement must be performed only by professionals.
- Do not repair the equipment with power ON. Failure to comply will result in an electric shock.
- Before inspection and repair, cut off all the power supplies of the equipment and wait for at least the time designated on the equipment warning label.

WARNING

- When the fuse is blown or the circuit breaker or earth leakage current breaker (ELCB) trips, wait for at least the time designated on the equipment warning label before power-on or further operations. Failure to comply may result in death, personal injuries, or equipment damage.
- When the equipment is faulty or damaged, the troubleshooting and repair work must be performed by professionals that follow the repair instructions, with repair records kept properly.
- Replace quick-wear parts of the equipment according to the replacement instructions.
- Do not use damaged equipment. Failure to comply may result in death, personal injuries, or severe equipment damage.
- After the equipment is replaced, check the wiring and set parameters again.

Disposal
WARNING • Dispose of retired equipment in accordance with local regulations and standards. Failure to comply may result in property damage, personal injuries, or even death. • Recycle retired equipment by observing industry waste disposal standards to avoid environmental pollution.

Safety Labels

For safe equipment operation and maintenance, comply with the safety labels on the equipment. Do not damage or remove the safety labels. See the following table for descriptions of the safety labels.

Safety Label	Description
	• Read through the safety instructions before operating the equipment. Failure to comply may result in death, personal injuries, or equipment damage. • Do not touch the terminals or remove the cover with power ON or within 10 min after power-off. Failure to comply will result in an electric shock.

1 Unpacking and Transportation

1.1 Inspection upon Unpacking

When receiving goods from the shipping company, check that you have received all the items specified on the delivery note. Notify the shipping company immediately of any missing components or damage. If necessary, request the support of Inovance office or your local agent.

After unpacking, check the item lists carefully and confirm that the terminals of the drive unit have been locked firmly to prevent them from falling off during transportation.

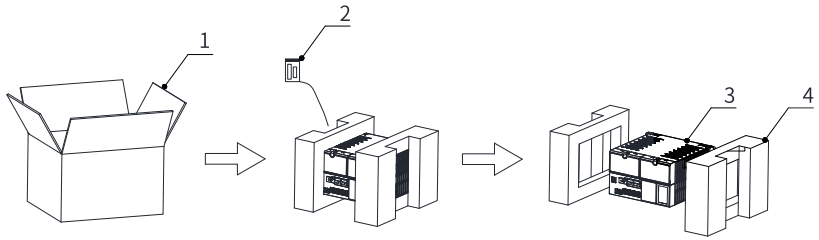

1. Carton; 2. Accessory kit; 3. Power supply unit; 4. Expanded polyethylene (EPE)

Figure 1-1 List of power supply unit items

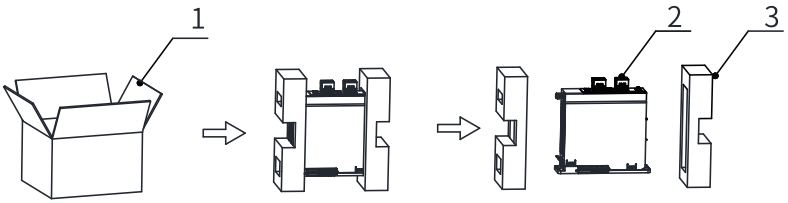

1. Carton; 2. Drive unit; 3. EPE

Figure 1-2 List of drive unit items

Caution

If the equipment is damaged during transportation, its electrical safety can no longer be ensured. Do not connect the equipment until a thorough high-voltage test has been performed.

1.2 Transportation and Handling

The device is compact and light and suitable for manual handling. Handle the AC drive with care. Do not throw or drag the device or step on its package.

Transport the device in cartons. Do not stack the devices over a total height of 1.8 m.

1.3 Storage Requirements

Requirements for storage with package:

- When the AC drive is placed near the wall and no passage is left, make sure a distance of at least 200 mm between the AC drive and the wall.
- Never occupy the fire exit and block the safety exit when storing the AC drive.
- Reserve a passage of about 1 m wide in front of the fire hydrant, and do not place the AC drive within one meter in front of the power distribution cabinet.
- When the AC drive packed in a carton is stored outdoors, it must be placed on a pallet and fully covered with rain-proof cloth.
- The AC drive that has been stored for more than 24 hours or underwent severe weather must pass the risk assessment by relevant departments before transshipment and delivery.
- Store the AC drive with care. Never throw it, drag it on the ground, as well as step on the package and operate it.
- During storage, place the large and heavy AC drive at the bottom. The total stacking height cannot exceed 1.8 m.
- The AC drive delivered with the pallet must be placed within the pallet. When there are more than two stacking layers and the overlapping stacking is used, fix the AC drive with the stretch film (do not use the box-sealing tape).

Requirements for storage without package:

- The AC drive must be stored in a clean and dry room, with temperatures between -40°C and +70°C and temperature variations smaller than 1°C/min.
- If the AC drive is stored for a prolonged period once it has been unpacked, cover it or take other appropriate measures to ensure that it does not become dirty and that it is protected against environmental influences.
- Pack the AC drive with the original packing box provided by Inovance.

- Do not expose the AC drive to moisture, high temperature, or outdoor direct sunlight for an extended period.
- If the AC drive is stored for a long time (the AC drive is not switched on for more than one year), the electrolytic capacitor must be repaired. Direct power-on of the AC drive may cause damage to the electrolytic capacitor. For the operations of repairing the electrolytic capacitor, see chapter "Storage and Warranty" in the *Maintenance and Repair Guide*.

2 Preparations Before Installation

2.1 Installation Procedure

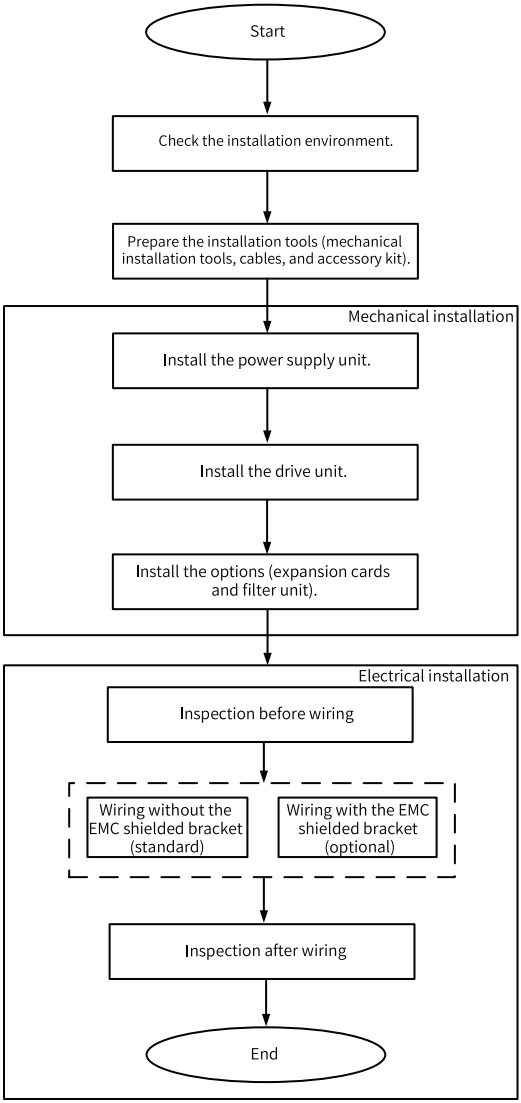

Figure 2-1 Installation flowchart

2.2 Installation Environment

To fully utilize the product performance and ensure long-term use, install the AC drive in an environment meeting the following requirements.

Table 2–1 Installation environment requirements

Item	Requirement
Installation location	Indoor
Grid overvoltage	Overvoltage category (OVC) III
Temperature	Installation/Operating temperature: • Applications without overload: 1) -10°C to +50°C: without derating; 2) 50°C < temperature ⩽ 60°C: the AC drive is derated by 2.5% for every added 1°C; 3) > 60°C: not recommended for use • Applications with overload: 1) -10°C to +40°C: without derating; 2) 40°C < temperature ⩽ 60°C: the AC drive is derated by 2.5% for every added 1°C; 3) > 60°C: not recommended for use Storage/Transportation temperature: -40°C to +70°C (no freezing) • To improve the reliability of the AC drive, use the AC drive in places without sharp temperature change. • When installing the AC drive in an enclosed cabinet, use the cooling fan or air conditioner to keep the incoming air temperature below 50°C. Failure to comply may result in over-temperature of the AC drive or even a fire. • Install the AC drive on a flame-retardant surface, and ensure that sufficient space is left around it for efficient heat dissipation. • Avoid freezing the AC drive.
Relative humidity	< 95% RH, without condensation
Environment	Pollution degree (PD): PD2 or below Install the AC drive in the following locations: • Free from direct sunlight, dust, corrosive and combustible gases, oil mist, vapor, drip, or salt • Not prone to vibration and away from equipment such as punch presses • Do not install any devices generating electromagnetic waves or interference, such as transformer, around the AC drive. If it is necessary to install such a device, a shielding plate must be added between the device and the AC drive. Otherwise, a malfunction of the AC drive will occur. • The AC drive must be installed in a cabinet that is used in a final system. The system must be equipped with a fireproof enclosure providing both electrical and mechanical protection. The installation must conform to local and regional laws and regulations, and relevant IEC standards.

Item	Requirement
Altitude	Star power grid: max. 4000 m (13123 ft) Delta power grid: max. 2000 m (6562 ft) • ≤ 1000 m (3281 ft): without derating • > 1000 m (3281 ft): derated by 1% for every 100 m (328.1 ft) increase in the altitude.
Vibration	Below 4.9 m/s^2 • When transported in the package: compliant with class 2M3 in EN 60721-3-2 • After the package is removed: compliant with ISTA 1H
Dust	Compliant with class 3S2 in IEC60721-3 (non-conductive dust)
Chemically active substance	Compliant with class 3C2 in IEC60721-3
Shock	Below 19.6 m/s^2
IP rating	IP40 (excluding terminals and fans)

2.3 Installation Tools

2.3.1 Mechanical Installation Tools

Table 2–2 Mechanical installation tools

Tool	Description	Diagram
Electric drill and drilling bit	Used to drill the mounting holes on the mounting surface during mechanical installation.	
Phillips-head and straight (2.5 mm) screwdrivers	Used to tighten or loosen the screws during mechanical installation.	

Tool	Description	Diagram
Tape measure	Used to measure the mounting dimensions of the AC drive during installation.	
Gloves	Used to prevent static electricity during mechanical installation.	
M4x12 cross recessed pan head SEMS screws (with flat washer and spring washer)	Power supply unit: 4 PCS per unit Drive unit: 2 PCS per unit Filter unit: 2 PCS per unit	-
Wiring tool (standard for the power supply unit)	Used to crimp the cables to terminals. The wiring tool is marked with two current types. 55 A corresponds to the input terminals of the power supply unit, and 30 A corresponds to the output terminals of the drive unit and braking terminals.	
EMC shielded brackets (optional)	The EMC shielded brackets are optional. The bracket for the power supply unit is installed on the input side of the power supply unit, and the bracket for the drive unit is installed on the output side of the drive unit.	EMC shielded bracket for the power supply unit EMC shielded bracket for the drive unit

2.3.2 Cables

Table 2–3 Cables

Category	Cable Name	Diagram	Category	Cable Name	Diagram
Main circuit cable	Power cable		Control circuit cable	Signal cable	
	Grounding cable			LAN cable	

2.3.3 Accessory Kit

Table 2–4 Items in the accessory kit

Name	Diagram	Quantity	Name	Diagram	Quantity	Name	Diagram	Quantity
Input terminal		1	Relay output terminal (CN2)		1	Braking output terminal (BR/+) (applies to models with an optional braking unit)		1
Signal terminal (CN1)		1	External 24 V power input terminal (CN6)		1	Wiring tool (standard for the power supply unit)		1

3 Installation and Wiring

3.1 Mechanical Installation

3.1.1 Installing the Power Supply Unit

Procedure

1. Remove the protective cover on the right side of the power supply unit.

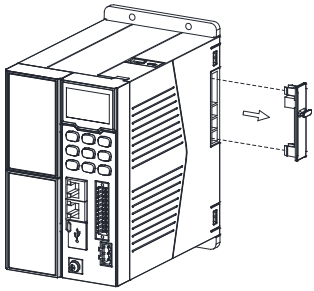

Note

Keep the removed protective cover. It needs to be installed to the rightmost drive unit.

---

2. Tighten the four M4x12 screws at the upper and lower ends of the power supply unit to secure the unit to the sheet metal mounting plate.

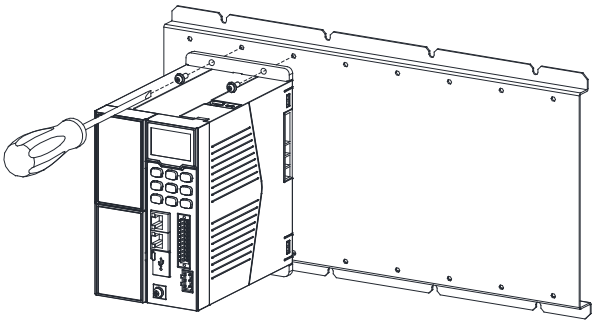

Caution

All retaining nuts must be tightened. Otherwise, the power supply unit may fall off or be damaged due to the unbalanced effect on the fixed part during long-time running.

3.1.2 Installing the Drive Unit

Procedure

1. Align the connector on the left side of the drive unit with the connector on the right side of the power supply unit, and insert the drive unit.

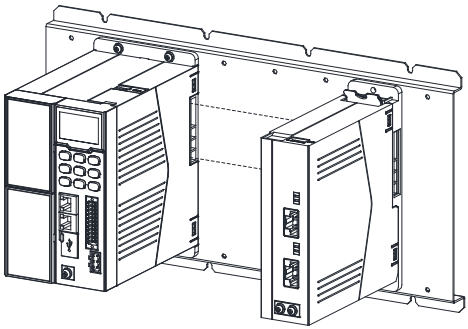

2. Tighten the two M4x12 screws at the upper and lower ends of the drive unit to secure the unit to the sheet metal mounting plate.

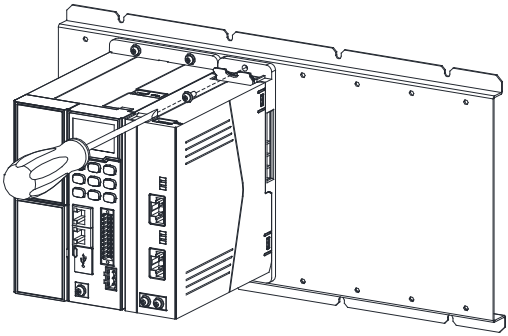

Caution

All retaining nuts must be tightened. Otherwise, the drive unit may fall off or be damaged due to the unbalanced effect on the fixed part during long-time running.

3. Secure all the drive units to the sheet metal mounting plate one by one by repeating Steps 1 and 2.

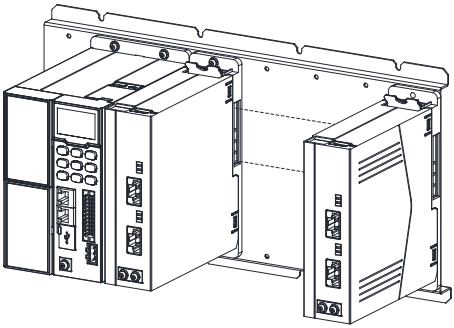

4. After all drive units are installed, reinstall the removed protective cover on the connector of the rightmost drive unit.

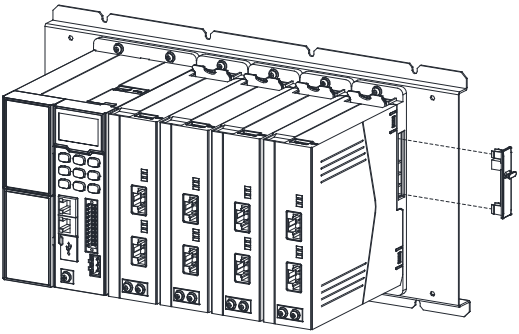

3.1.3 Installing Options

3.1.3.1 Expansion Card

Procedure

1. Insert a straight screwdriver into the concaved slot beside the expansion card box and lever the box out towards left.

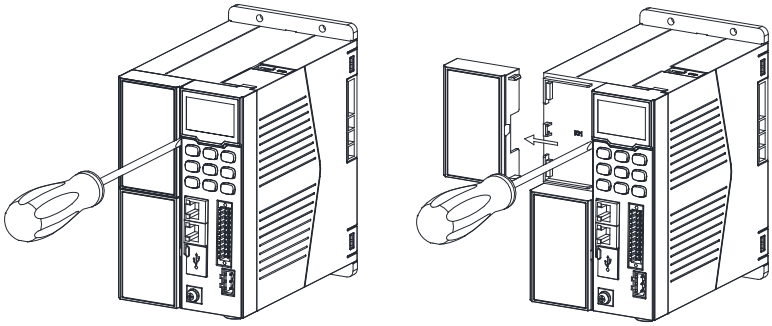

2. Align the optional expansion card with the slot and push it gently from left to right until it is in position.

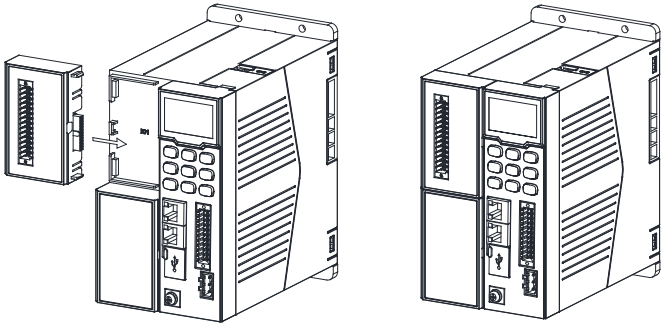

3.1.3.2 Filter Unit

Procedure

1. Secure the filter unit to the left side of the power supply unit using two M4x12 screws.

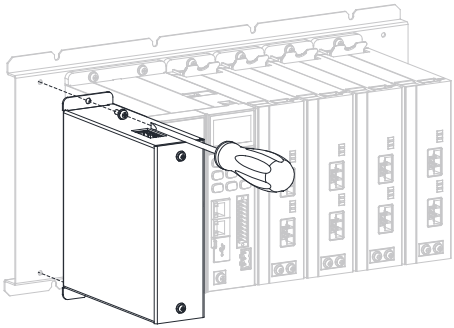

2. Fix the input and output grounding terminals of the filter unit using M4x10 screws (provided for the AC drive).

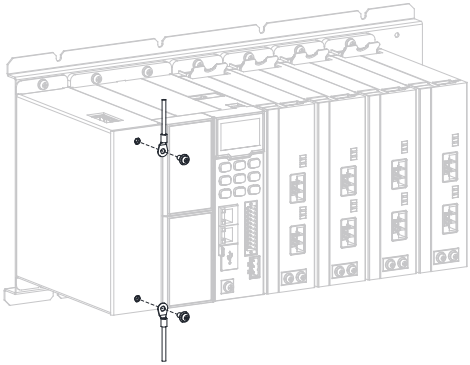

3. Insert the input and output terminals of the filter unit in turn.
   One end of the output cable of the filter unit is connected to the output terminal of the filter unit, and the other end is connected to the input terminal of the drive unit.

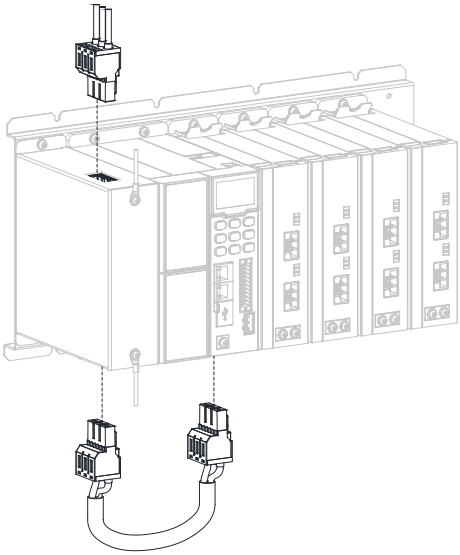

3.2 Electrical Installation

3.2.1 Inspection Before Wiring

- Never perform wiring when the power is on, and keep all circuit breakers OFF. Failure to comply will result in an electric shock.
- After disconnecting the power supplies on the input and output sides, wait for at least the time designated on the product warning label before further operations (such as wiring).
- The user is responsible for ensuring that the motor, cabinet units, and other components are installed and connected in accordance with the recognized technical rules in the country of installation and with other applicable regional regulations. Special attention must be paid to cable dimensions, fuses, grounding, disconnection, isolation, and overcurrent protection.
- If an item of protective gear trips in a branch circuit, a leakage current may have been disconnected. To reduce the risk of fire or an electric shock, you must inspect the current-carrying parts and other components in the AC drive and replace the damaged parts. When an item of protective gear trips, the cause of the trip must be identified and rectified.

3.2.2 Wiring

Procedure

1. Secure the grounding cables to grounding terminals using M4x10 screws.

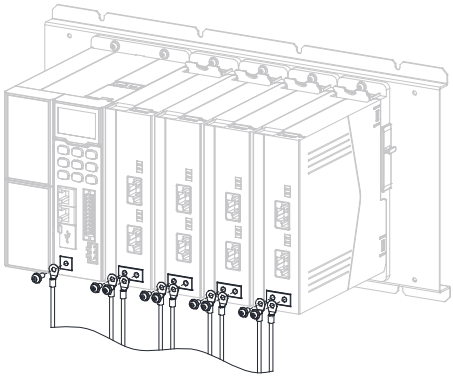

2. Crimp the cables to terminals.
   Press the wiring tool (shown as the arrow in the following figure) to open the spring clamp of the terminal, and insert the crimped cable into the round hole.

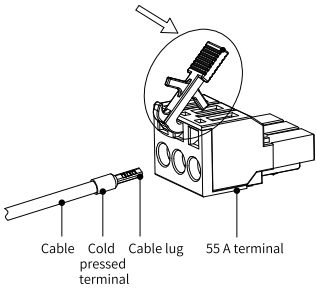

   The wiring is as follows.

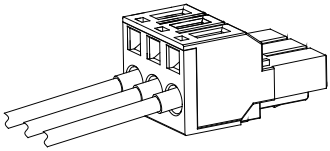

Note

- The wiring tool is required for connecting the power supply unit input terminal and drive unit output terminals. The thick side of the tool is used for the power supply unit and the thin side is used for the drive unit.
- The signal terminal, relay output terminal, external 24 V power input terminal, and safe torque off (STO) terminal can be directly plugged in.

3. Insert the input terminal into the power supply unit.

Note

For models with an optional braking unit, the braking output terminal must be inserted.

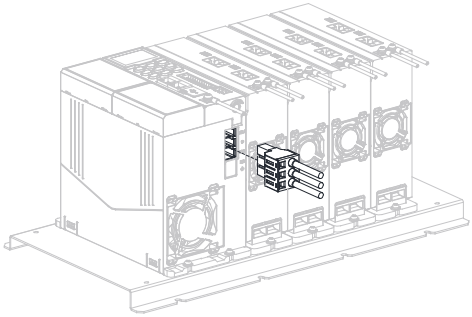

4. Insert the output terminals into the drive unit.

Note

For models with an optional STO terminal, the STO terminal must be inserted.

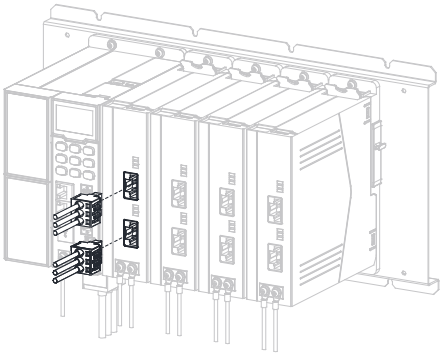

5. Insert the control terminal, relay terminal, and 24V power input terminal into the power supply unit.

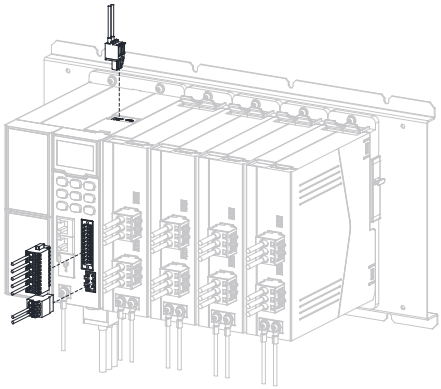

Caution

After completing the wiring, snap the wiring tool onto the drive unit output terminal, as shown in the following figure.

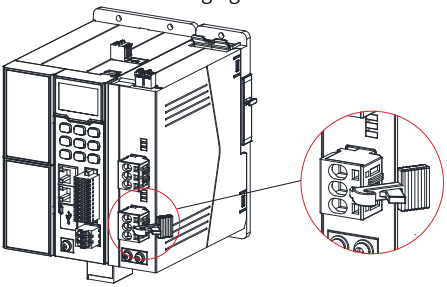

3.2.3 Wiring with EMC Shielded Brackets (Optional)

If optional EMC shielded brackets are required, the cables used must be multi-core shielded cables and be crimped according to the following requirements.

Procedure

1. Connecting the power supply unit
   a. Remove the M4x10 grounding screw from the power supply unit, and attach the EMC shielded bracket to the power supply unit with this screw.

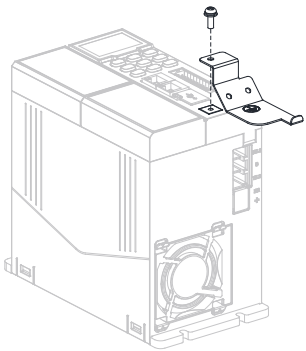

   b. Insert the input terminal (for the terminal crimping, see *"3.2.2 Wiring" on page 22*), and attach the input grounding cable to the EMC shielded bracket with one M4x10 screw.

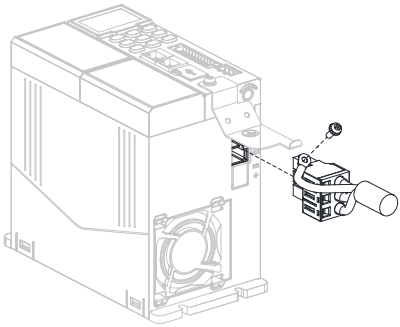

c. Strip the power input cable shield (about 15 mm), and attach the shield to the EMC shielded bracket with a hose clamp.

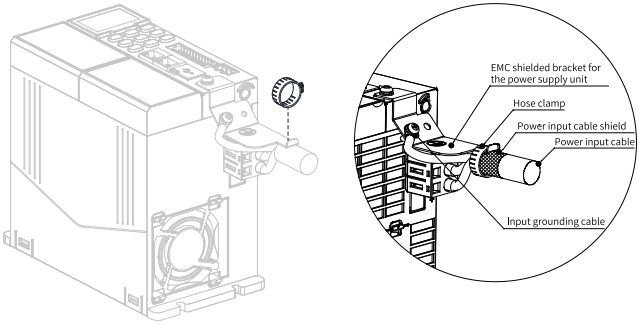

d. Insert the control and relay terminals.

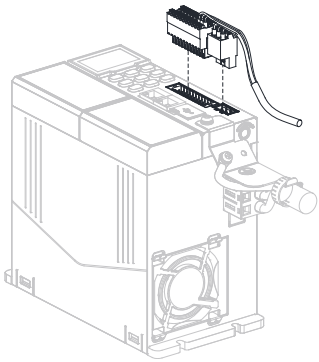

e. Strip the control cable shield (about 15 mm), and attach the shield to the EMC shielded bracket with a 360° control cable grounding clamp and one M4x10 screw.

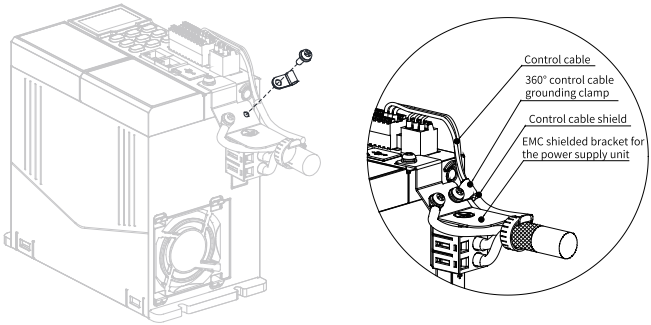

2. Connecting the drive unit

a. Attach the EMC shielded bracket to the drive unit with two M4x10 screws.

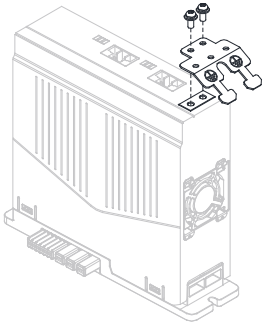

b. Attach the drive unit grounding cable to the EMC shielded bracket with one M4X10 screw.

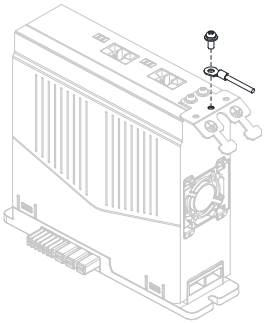

c. Insert the drive unit output terminals, and attach the output grounding cables to the EMC shielded bracket with M4x10 screws.

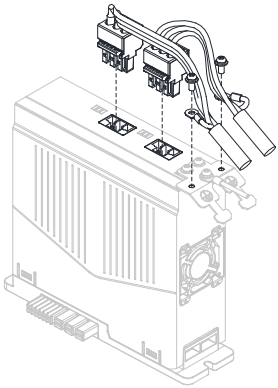

d. Strip the output cable shields (about 15 mm), and attach the shields to the EMC shielded bracket with hose clamps.

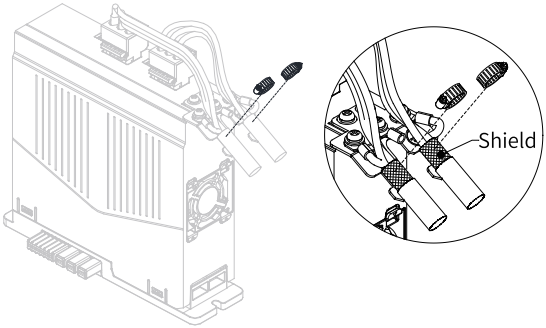

The completed wiring is as follows.

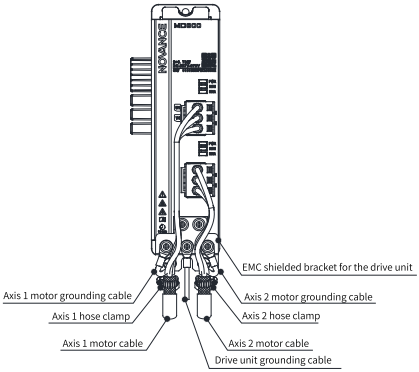

3.2.4 Inspection After Wiring

After wiring has been completed, check the items in the following table. Sign the corresponding "Applicable?" column after each inspection.

Table 3–1 Wiring checklist

No.	Inspection Item	Applicable?
1	The power input cables are connected to the R/L1, S, and T/L2 terminals.	
2	The motor input cables are connected to the U, V, and W terminals.	
3	The cross-sectional area of the main circuit cables meets the requirements.	
4	The heat-shrink tubes have been added to the cores of main circuit cables, and the tubes completely cover the cable conductors.	
5	Confirm whether the motor output cables are longer than 150 m (unshielded) or 50 m (shielded). If yes, reduce the carrier frequency (F0-15) and add an output reactor (see the requirements for options).	
6	The grounding cables are connected correctly.	
7	The AC drive output terminals and control signal terminals are securely connected.	
8	The braking resistor and braking unit (if used) are connected correctly and have proper resistance.	
9	The control circuit cables are shielded twisted pairs (STPs).	
10	The optional cards are connected correctly.	
11	If the AC drive is an STO model, confirm that the external 24 V power supply is connected properly.	

No.	Inspection Item	Applicable?
12	The control circuit cables and main circuit cables are routed separately.	
13	The protective cover removed from the power supply unit is reinstalled on the connector of the rightmost drive unit.	

3.2.5 System Grounding

Securely ground each module of the AC drive, including the power supply unit, drive unit, and filter module. Connect the power supply unit, drive unit, input reactor, and filter (or filter module) to the grounding copper busbar of the cabinet in star manner, and connect the output side of the drive unit to the motor, as shown in the following figure.

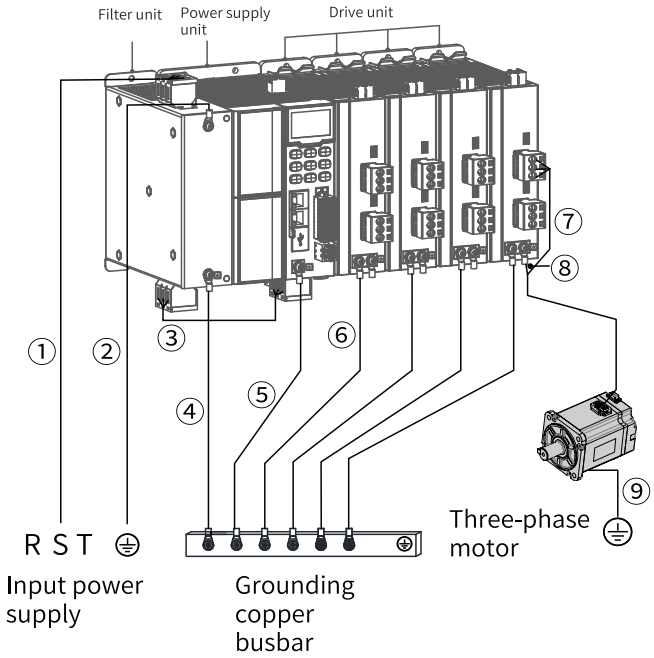

Figure 3-1 System grounding

No.	Wiring Description
①	Connect the input terminal of the filter module to the power RST input terminal.
②	Connect the input grounding screw of the filter module to the power grounding terminal.
③	Connect the output terminal of the filter module to the input terminal of the power supply unit. Use a shielded cable.
④	Connect the output M4 grounding screw of the filter module to the grounding copper busbar.
⑤	Connect the M4 grounding screw of the power supply unit to the grounding copper busbar.
⑥	Connect the M4 grounding screw of the drive unit to the grounding copper busbar.
⑦	Connect the output side of the drive unit to the motor input side.
⑧	Connect the grounding wire of the motor output cable of the drive unit to the grounding screw of the drive unit.
⑨	Ground the motor enclosure.

Note

In the preceding figure, the power supply unit is equipped with four dual-axis drive units. In the figure, only axis 1 of the rightmost drive unit is taken as an example to introduce the wiring of the drive unit. The wiring for other drive units is similar.

4 Commissioning and Trial Run

4.1 Basic Commissioning Procedure

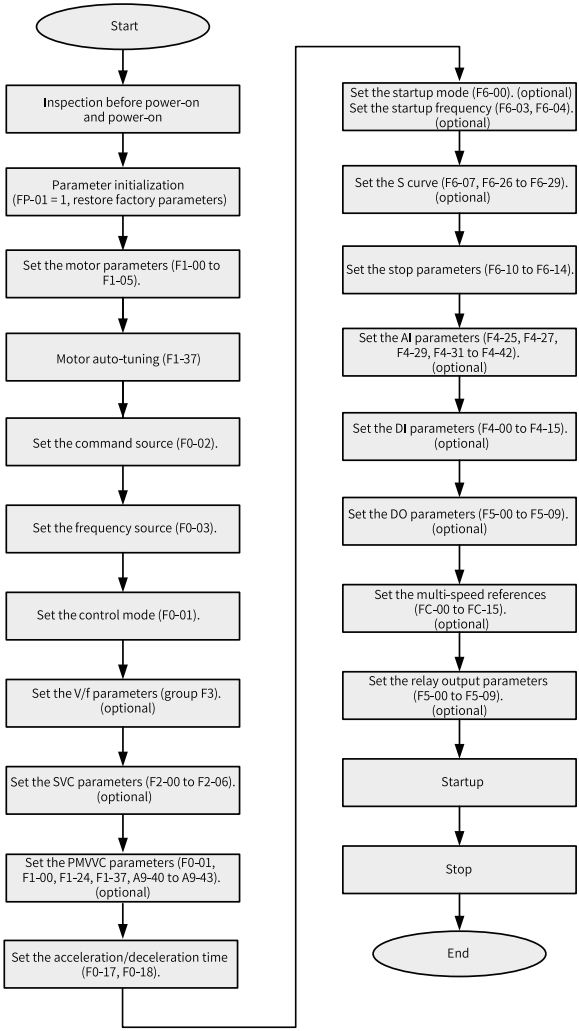

Figure 4-1 Basic commissioning flowchart

4.2 Commissioning Procedure Under V/f Control

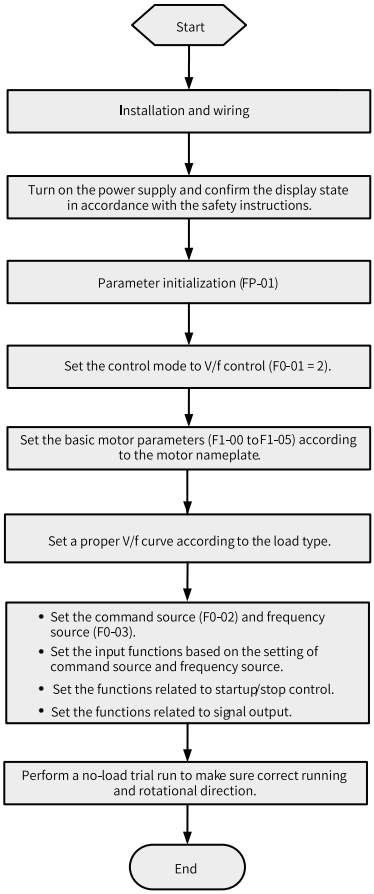

Figure 4-2 Commissioning flowchart under voltage/frequency (V/f) control

4.3 Commissioning Procedure Under SVC

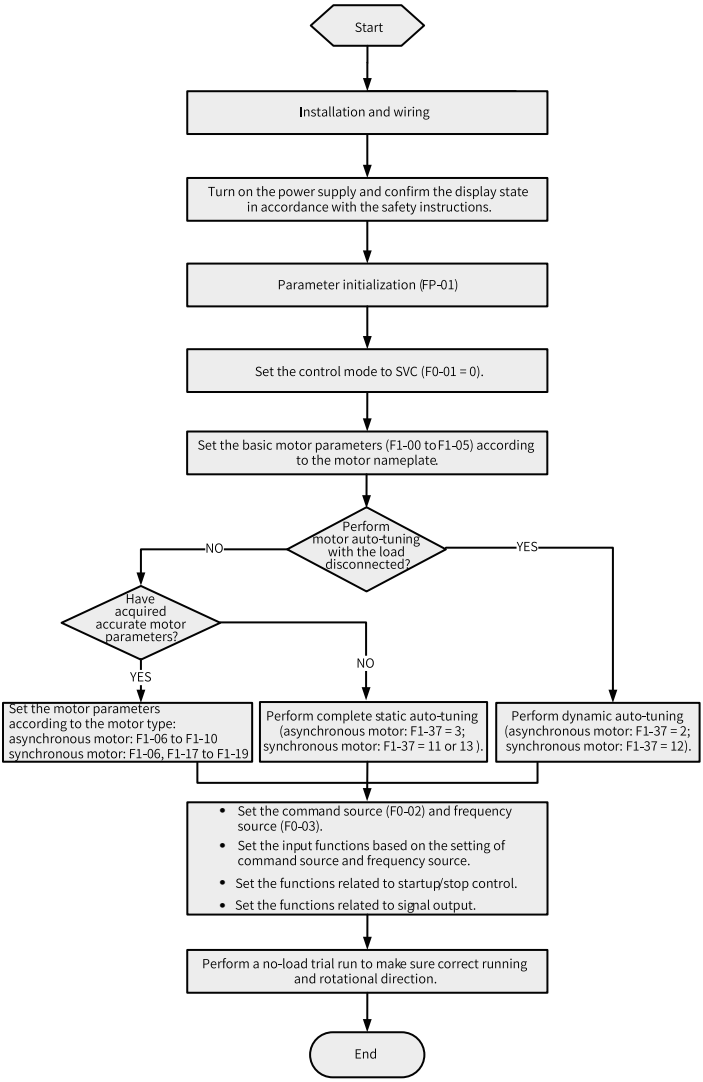

Figure 4-3 Commissioning flowchart under sensorless vector control (SVC)

4.4 Commissioning Procedure Under PMVVC

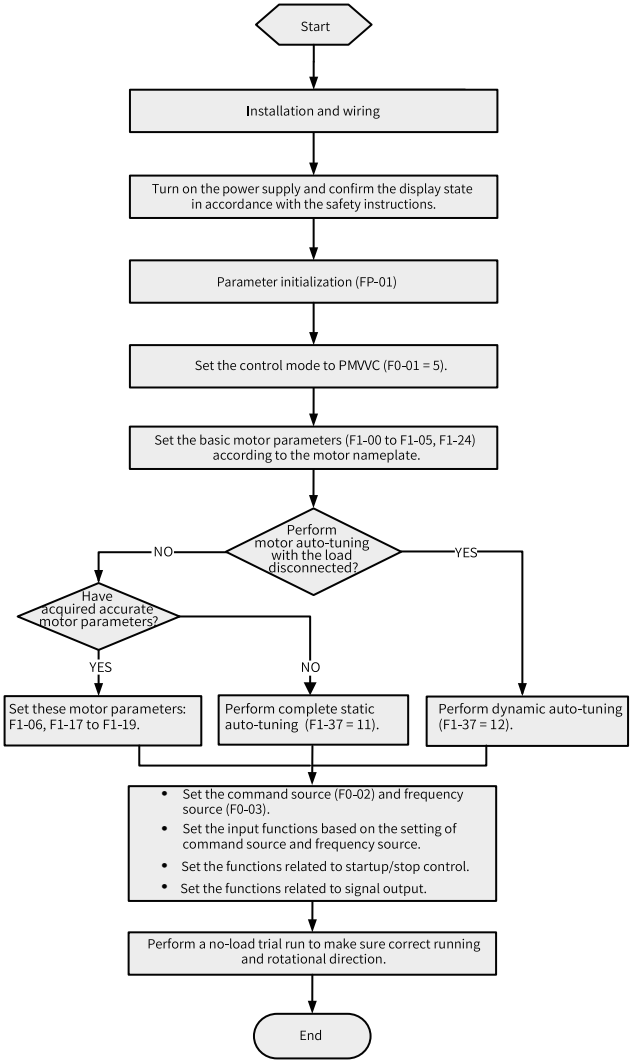

Figure 4-4 Commissioning flowchart under permanent magnet voltage vector control (PMVVC)

4.5 List of Function Parameters

Table 4–1 List of function parameters of power supply unit

Para. No.	Add.	Name	Value Range	Default	Unit	Change
F0-01	61441	Product code	800.0	800	-	Unchangeable
F0-02	61442	Software version	0.00 to 655.35	0.00	-	Unchangeable
F0-03	61443	Temporary software version	0.00 to 655.35	0.00	-	Unchangeable
F0-04	61444	Customized No.	0 to 9999	0	-	Unchangeable
F1-00	61696	Bus undervoltage threshold	Single-phase 220 V: 150 V to 220 V Three-phase 380 V: 300 V to 440 V	190 V for 1-phase 220 V 350 V for 3-phase 380 V	V	At once
F1-01	61697	Bus overvoltage threshold	Single-phase 220 V: 300 V to 410 V Three-phase 380 V: 600 V to 820 V	Single-phase 220 V: 410 V Three-phase 380 V: 820 V	V	At once
F1-02	61698	Braking unit applied voltage	Single-phase 220 V: 300 V to 410 V Three-phase 380 V: 600 V to 820 V	Single-phase 220 V: 360 V Three-phase 380 V: 760 V	V	At once
F1-03	61699	Braking transistor open-circuit fault	0: Disabled 1: Enabled	1	-	At once
F1-04	61700	Braking transistor short-circuit	0: Disabled 1: Enabled	1	-	At once
F1-05	61701	Input phase loss fault	0: Disabled 1: Enabled 2: Alarm	2	-	At once
F1-06	61702	Input overvoltage fault	0: Disabled 1: Enabled 2: Alarm	2	-	At once
F1-07	61703	Fan fault	0: Disabled 1: Enabled 2: Alarm	1	-	At once
F1-08	61704	Reserved	0 to 1	1	-	Unchangeable
F1-09	61705	Fan control	0: Uni-directional running 1: Forward and reverse running	0	-	At once

Para. No.	Add.	Name	Value Range	Default	Unit	Change
F4-00	62464	DI1 hardware source	0: Not selected 1: Power supply unit - DI1 2: Power supply unit - DI2 3: Power supply unit - DI3 4: Power supply unit - DI4 5: Power supply unit - DIO1 6: Power supply unit - DIO2 7: Power supply unit - DIO3 8: Power supply unit - DIO4 101: Extension card 1 - DI1 102: Extension card 1 - DI2 103: Extension card 1 - DI3 104: Extension card 1 - DI4 105: Extension card 1 - DI5 106: Extension card 1 - DI6 107: Extension card 1 - DI7 108: Extension card 1 - DI8 201: Extension card 2 - DI1 202: Extension card 2 - DI2 203: Extension card 2 - DI3 204: Extension card 2 - DI4 205: Extension card 2 - DI5 206: Extension card 2 - DI6 207: Extension card 2 - DI7 208: Extension card 2 - DI8	0	-	At stop
F4-01	62465	DI1 function	0: No function 1: Operation enable 2: Incoming circuit breaker feedback 3: Auxiliary circuit breaker feedback	0	-	At stop
(Continued)			4: Residual current device feedback 5: Fault reset 6: Operation disabled for drive unit 7: Drive unit coast to stop 8: Drive unit stop according to preset stop mode			
F4-02	62466	DI2 hardware source	Same as F4-00	0	-	At stop
F4-03	62467	DI2 function selection	Same as F4-01	0	-	At stop
F4-04	62468	DI3 hardware source	Same as F4-00	0	-	At stop
F4-05	62469	DI3 function	Same as F4-01	0	-	At once
F4-06	62470	DI4 hardware source	Same as F4-00	0	-	At stop
F4-07	62471	DI4 function	Same as F4-01	0	-	At stop
F4-08	62472	DI5 hardware source	Same as F4-00	0	-	At stop

Para. No.	Add.	Name	Value Range	Default	Unit	Change
F4-09	62473	DI5 function	Same as F4-01	0	-	At stop
F4-10	62474	DI6 hardware source	Same as F4-00	0	-	At stop
F4-11	62475	DI6 function	Same as F4-01	0	-	At stop
F4-12	62476	DI7 hardware source	Same as F4-00	0	-	At stop
F4-13	62477	DI7 function	Same as F4-01	0	-	At stop
F4-14	62478	DI8 hardware source	Same as F4-00	0	-	At stop
F4-15	62479	DI8 function	Same as F4-01	0	-	At stop
F4-16	62480	DI1 active delay	0.00s to 600.00s	0.00	s	At once
F4-17	62481	DI2 active delay	0.00s to 600.00s	0.00	s	At once
F4-18	62482	DI3 active delay	0.00s to 600.00s	0.00	s	At once
F4-19	62483	DI4 active delay	0.00s to 600.00s	0.00	s	At once
F4-20	62484	DI5 active delay	0.00s to 600.00s	0.00	s	At once
F4-21	62485	DI6 active delay	0.00s to 600.00s	0.00	s	At once
F4-22	62486	DI7 active delay	0.00s to 600.00s	0.00	s	At once
F4-23	62487	DI8 active delay	0.00s to 600.00s	0.00	s	At once
F4-24	62488	DI1 inactive delay	0.00s to 600.00s	0.00	s	At once
F4-25	62489	DI2 inactive delay	0.00s to 600.00s	0.00	s	At once
F4-26	62490	DI3 inactive delay	0.00s to 600.00s	0.00	s	At once
F4-27	62491	DI4 inactive delay	0.00s to 600.00s	0.00	s	At once
F4-28	62492	DI5 inactive delay	0.00s to 600.00s	0.00	s	At once
F4-29	62493	DI6 inactive delay	0.00s to 600.00s	0.00	s	At once
F4-30	62494	DI7 inactive delay	0.00s to 600.00s	0.00	s	At once
F4-31	62495	DI8 inactive delay	0.00s to 600.00s	0.00	s	At once
F4-32	62496	DI (DI1 to DI5) active mode	Ones: DI1 active mode Tens: DI2 active mode Hundreds: DI3 active mode Thousands: DI4 active mode Ten thousands: DI5 active mode 0: Active low 1: Active high	0	-	At once
F4-33	62497	DI (DI6 to DI8) active mode	Ones: DI6 active mode Tens: DI7 active mode Hundreds: DI8 active mode 0: Active low 1: Active high	0	-	At once

Para. No.	Add.	Name	Value Range	Default	Unit	Change
F5-00	62720	DO1/RO1 hardware source	0: Not selected 1: Power supply unit - DIO1 2: Power supply unit - DIO2 3: Power supply unit - DIO3 4: Power supply unit - DIO4 5: Power supply unit - RO1 101: Extension card 1 - DO1/RO1 102: Extension card 1 - DO2/RO2 103: Extension card 1 - DO3/RO3 104: Extension card 1 - DO4/RO4 105: Extension card 1 - DO5/RO5 106: Extension card 1 - DO6/RO6 107: Extension card 1 - DO7/RO7 108: Extension card 1 - DO8/RO8 201: Extension card 2 - DO1/RO1 202: Extension card 2 - DO2/RO2 203: Extension card 2 - DO3/RO3 204: Extension card 2 - DO4/RO4 205: Extension card 2 - DO5/RO5 206: Extension card 2 - DO6/RO6 207: Extension card 2 - DO7/RO7 208: Extension card 2 - DO8/RO8	0	-	At stop

Para. No.	Add.	Name	Value Range	Default	Unit	Change
F5-01	62721	DO1/RO1 function	0: No function 1: Ready to run 2: Fault 3: Warning 4: Circuit breaker action 5: Bus undervoltage 6: Bus overvoltage 7: Bus voltage normal 8: Three-phase input abnormal 9: Three-phase input normal 10: Output upon IGBT overtemperature 11: Output upon IGBT overtemperature pre-warning 12: Communication control	0	-	At stop
F5-02	62722	DO2/RO2 hardware source	Same as F5-00	0	-	At stop
F5-03	62723	DO2/RO2 function	Same as F5-01	0	-	At stop
F5-04	62724	DO3/RO3 hardware source	Same as F5-00	0	-	At stop
F5-05	62725	DO3/RO3 function	Same as F5-01	0	-	At stop
F5-06	62726	DO4/RO4 hardware source	Same as F5-00	0	-	At stop
F5-07	62727	DO4/RO4 function	Same as F5-01	0	-	At stop
F5-08	62728	DO5/RO5 hardware source	Same as F5-00	0	-	At stop
F5-09	62729	DO5/RO5 function	Same as F5-01	0	-	At stop
F5-10	62730	DO1/RO1 active delay	0.00s to 600.00s	0.00	s	At once
F5-11	62731	DO2/RO2 active delay	0.00s to 600.00s	0.00	s	At once
F5-12	62732	DO3/RO3 active delay	0.00s to 600.00s	0.00	s	At once
F5-13	62733	DO4/RO4 active delay	0.00s to 600.00s	0.00	s	At once
F5-14	62734	DO5/RO5 active delay	0.00s to 600.00s	0.00	s	At once
F5-15	62735	DO1/RO1 inactive delay	0.00s to 600.00s	0.00	s	At once
F5-16	62736	DO2/RO2 inactive delay	0.00s to 600.00s	0.00	s	At once
F5-17	62737	DO3/RO3 inactive delay	0.00s to 600.00s	0.00	s	At once
F5-18	62738	DO4/RO4 inactive delay	0.00s to 600.00s	0.00	s	At once
F5-19	62739	DO5/RO5 inactive delay	0.00s to 600.00s	0.00	s	At once
F5-20	62740	DO active mode	Ones: DO1/RO1 active mode Tens: DO2/RO2 active mode Hundreds: DO3/RO3 active mode Thousands: DO4/RO4 active mode Ten thousands: DO5/RO5 active mode 0: Active high 1: Active low	0	-	At once

Para. No.	Add.	Name	Value Range	Default	Unit	Change
F5-21	62741	Circuit breaker action threshold	0 V to 1000 V	Three-phase 380 V: 570 V Single-phase 220 V: 330 V	V	At once
FA-00	64000	Fault code of the 5th fault (latest)	-	0	-	Unchangeable
FA-01	64001	Fault subcode of the 5th fault	-	0	-	Unchangeable
FA-02	64002	Bus voltage upon the 5th fault	-	0.0	V	Unchangeable
FA-03	64003	Heatsink temperature upon the 5th fault	-	0	°C	Unchangeable
FA-04	64004	Ambient temperature upon the 5th fault	-	0	°C	Unchangeable
FA-06	64006	Grid voltage Usr upon the 5th fault	-	0	V	Unchangeable
FA-07	64007	Grid voltage Ust upon the 5th fault	-	0	V	Unchangeable
FA-08	64008	Grid voltage Utr upon the 5th fault	-	0	V	Unchangeable
FA-09	64009	Three-phase unbalance factor upon the 5th fault	-	0.00	%	Unchangeable
FA-10	64010	DI status upon the 5th fault	-	0	-	Unchangeable
FA-11	64011	DO/RO status upon the 5th fault	-	0	-	Unchangeable
FA-12	64012	Stop command sent from the power supply unit upon the 5th fault	1: Ready to run 2: Coast to stop 3: Stop according to preset mode	0	-	Unchangeable
FA-13	64013	Total power-on duration (hour) upon the 5th fault	-	0	h	Unchangeable
FA-14	64014	Total power-on duration (minute) upon the 5th fault	-	0	min	Unchangeable
FA-15	64015	Total power-on duration (second) upon the 5th fault	-	0	s	Unchangeable
FA-20	64020	Fault code of the 4th fault (2nd latest)	-	0	-	Unchangeable
FA-21	64021	Fault subcode of the 4th fault	-	0	-	Unchangeable
FA-22	64022	Bus voltage upon the 4th fault	-	0.0	V	Unchangeable
FA-23	64023	Heatsink temperature upon the 4th fault	-	0.0	°C	Unchangeable
FA-24	64024	Ambient temperature upon the 4th fault	-	0.0	°C	Unchangeable
FA-26	64026	Grid voltage Usr upon the 4th fault	-	0.0	V	Unchangeable
FA-27	64027	Grid voltage Ust upon the 4th fault	-	0.0	V	Unchangeable
FA-28	64028	Grid voltage Utr upon the 4th fault	-	0.0	V	Unchangeable
FA-29	64029	Three-phase unbalance factor upon the 4th fault	-	0.00	%	Unchangeable
FA-30	64030	DI status upon the 4th fault	-	0.0	-	Unchangeable

Para. No.	Add.	Name	Value Range	Default	Unit	Change
FA-31	64031	DO/RO status upon the 4th fault	-	0.0	-	Unchangeable
FA-32	64032	Stop command sent from the power supply unit upon the 4th fault	1: Ready to run 2: Coast to stop 3: Stop according to preset mode	0.0	-	Unchangeable
FA-33	64033	Total power-on duration (hour) upon the 4th fault	-	0.0	h	Unchangeable
FA-34	64034	Total power-on duration (minute) upon the 4th fault	-	0.0	min	Unchangeable
FA-35	64035	Total power-on duration (second) upon the 4th fault	-	0.0	s	Unchangeable
FA-40	64040	Fault code of the 3rd fault (3rd latest)	-	0.0	-	Unchangeable
FA-41	64041	Fault subcode of the 3rd fault	-	0.0	-	Unchangeable
FA-42	64042	Bus voltage upon the 3rd fault	-	0.0	V	Unchangeable
FA-43	64043	Heatsink temperature upon the 3rd fault	-	0.0	°C	Unchangeable
FA-44	64044	Ambient temperature upon the 3rd fault	-	0.0	°C	Unchangeable
FA-46	64046	Grid voltage Usr upon the 3rd fault	-	0.0	V	Unchangeable
FA-47	64047	Grid voltage Ust upon the 3rd fault	-	0.0	V	Unchangeable
FA-48	64048	Grid voltage Utr upon the 3rd fault	-	0.0	V	Unchangeable
FA-49	64049	Three-phase unbalance factor upon the 3rd fault	-	0.00	%	Unchangeable
FA-50	64050	DI status upon the 3rd fault	-	0.0	-	Unchangeable
FA-51	64051	DO/RO status upon the 3rd fault	-	0.0	-	Unchangeable
FA-52	64052	Stop command sent from the power supply unit upon the 3rd fault	1: Ready to run 2: Coast to stop 3: Stop according to preset mode	0.0	-	Unchangeable
FA-53	64053	Total power-on duration (hour) upon the 3rd fault	-	0.0	h	Unchangeable
FA-54	64054	Total power-on duration (minute) upon the 3rd fault	-	0.0	min	Unchangeable
FA-55	64055	Total power-on duration (second) upon the 3rd fault	-	0.0	s	Unchangeable
FA-60	64060	Fault code of the 2nd fault (4th latest)	-	0.0	s	Unchangeable
FA-61	64061	Fault subcode of the 2nd fault	-	0.0	-	Unchangeable
FA-62	64062	Bus voltage upon the 2nd fault	-	0.0	V	Unchangeable
FA-63	64063	Heatsink temperature upon the 2nd fault	-	0.0	°C	Unchangeable
FA-64	64064	Ambient temperature upon the 2nd fault	-	0.0	°C	Unchangeable

Para. No.	Add.	Name	Value Range	Default	Unit	Change
FA-66	64066	Grid voltage Usr upon the 2nd fault	-	0.0	V	Unchangeable
FA-67	64067	Grid voltage Ust upon the 2nd fault	-	0.0	V	Unchangeable
FA-68	64068	Grid voltage Utr upon the 2nd fault	-	0.0	V	Unchangeable
FA-69	64069	Three-phase unbalance factor upon the 2nd fault	-	0.00	%	Unchangeable
FA-70	64070	DI status upon the 2nd fault	-	0.0	-	Unchangeable
FA-71	64071	DO/RO status upon the 2nd fault	-	0.0	-	Unchangeable
FA-72	64072	Stop command sent from the power supply unit upon the 2nd fault	1: Ready to run 2: Coast to stop 3: Stop according to preset mode	0.0	-	Unchangeable
FA-73	64073	Total power-on duration (hour) upon the 2nd fault	-	0.0	h	Unchangeable
FA-74	64074	Total power-on duration (minute) upon the 2nd fault	-	0.0	min	Unchangeable
FA-75	64075	Total power-on duration (second) upon the 2nd fault	-	0.0	s	Unchangeable
FA-80	64080	Fault code of the 1st fault (5th latest)	-	0.0	-	Unchangeable
FA-81	64081	Fault subcode of the 1st fault	-	0.0	-	Unchangeable
FA-82	64082	Bus voltage upon the 1st fault	-	0.0	V	Unchangeable
FA-83	64083	Heatsink temperature upon the 1st fault	-	0	℃	Unchangeable
FA-84	64084	Ambient temperature upon the 1st fault	-	0	℃	Unchangeable
FA-86	64086	Grid voltage Usr upon the 1st fault	-	0	V	Unchangeable
FA-87	64087	Grid voltage Ust upon the 1st fault	-	0	V	Unchangeable
FA-88	64088	Grid voltage Utr upon the 1st fault	-	0	V	Unchangeable
FA-89	64089	Three-phase unbalance factor upon the 1st fault	-	0.00	%	Unchangeable
FA-90	64090	DI status upon the 1st fault	-	0	-	Unchangeable
FA-91	64091	DO/RO status upon the 1st fault	-	0	-	Unchangeable
FA-92	64092	Stop command sent from the power supply unit upon the 1st fault	1: Ready to run 2: Coast to stop 3: Stop according to preset mode	0	-	Unchangeable
FA-93	64093	Total power-on duration (hour) upon the 1st fault	-	0	h	Unchangeable
FA-94	64094	Total power-on duration (minute) upon the 1st fault	-	0	min	Unchangeable

Para. No.	Add.	Name	Value Range	Default	Unit	Change
FA-95	64095	Total power-on duration (second) upon the 1st fault	-	0	s	Unchangeable
Fd-00	64768	RS485 baud rate	0: 300 bps 1: 600 bps 2: 1200 bps 3: 2400 bps 4: 4800 bps 5: 9600 bps 6: 19200 bps 7: 38400 bps 8: 57600 bps 9: 115200 bps	5	-	At stop
Fd-01	64769	RS485 data format	0: No check (8-N-2) 1: Even parity (8-E-1) 2: Odd parity (8-O-1) 3: No check (8-N-1) 4: No check (7-N-2) 5: Even parity (7-E-1) 6: Odd parity (7-O-1) 7: No check (7-N-1)	0	-	At once
Fd-02	64770	RS485 local address	1 to 127	16	-	Unchangeable
Fd-03	64771	RS485 response delay	0 ms to 20 ms	2	ms	At once
Fd-04	64772	RS485 communication timeout time	0.0s to 60.0s	0.0	s	At once
Fd-06	64774	Communication fault auto reset	0: Disabled 1: Enabled	1	-	At once
Fd-07	64775	Maximum station number auto allocated	0 to 8	0	-	At once
Fd-09	64777	CANopen/CANlink communication status	Ones: CANopen 0: Stop 1: Initializing 2: Pre-running 8: Running Tens: CANlink 0: Stop 1: Initializing 2: Pre-running 8: Running	0	-	Unchangeable
Fd-10	64778	Communication protocol	1: CANopen 2: CANlink 3: Communication card mode	1	-	At once

Para. No.	Add.	Name	Value Range	Default	Unit	Change
Fd-12	64780	CAN baud rate	0: 20 kbps 1: 50 kbps 2: 100 kbps 3: 125 kbps 4: 250 kbps 5: 500 kbps 6: 1 Mbps	5	-	At once
Fd-13	64781	CAN station number	1 to 127	16	-	Unchangeable
Fd-14	64782	Number of CAN frames received per unit time (real-time)	0 to 65535	0	-	Unchangeable
Fd-15	64783	Maximum value of node reception error counter (real-time)	0 to 65535	0	-	Unchangeable
Fd-16	64784	Maximum value of node transmission error counter (real-time)	0 to 65535	0	-	Unchangeable
Fd-17	64785	Bus-off count per unit time	0 to 65535	0	-	Unchangeable
Fd-18	64786	Power supply unit number	1 to 15	1	-	At once
Fd-19	64787	CAN communication failure coefficient	1 to 15	1	-	At once
Fd-34	64802	CANopen mode	0: Standard 1: Expert	0	-	At once
Fd-35	64803	CANopen inhibit time	0 to 65535	0	-	At once
Fd-36	64804	CANopen event time	0 to 65535	0	-	At once
Fd-39	64807	AC drive station number configuration	0: Disabled 1: Enabled	0	-	At once
Fd-40	64808	Manual setting of power supply unit station number	0 to 127	0	-	At once
Fd-41	64809	Manual setting of drive unit 1 station number	0 to 127	0	-	At once
Fd-42	64810	Manual setting of drive unit 2 station number	0 to 127	0	-	At once
Fd-43	64811	Manual setting of drive unit 3 station number	0 to 127	0	-	At once
Fd-44	64812	Manual setting of drive unit 4 station number	0 to 127	0	-	At once
Fd-45	64813	Manual setting of drive unit 5 station number	0 to 127	0	-	At once
Fd-46	64814	Manual setting of drive unit 6 station number	0 to 127	0	-	At once
Fd-47	64815	Manual setting of drive unit 7 station number	0 to 127	0	-	At once
Fd-48	64816	Manual setting of drive unit 8 station number	0 to 127	0	-	At once
Fd-50	64818	Startup with station lost	0: Disabled 1: Enabled	0	-	At once

Para. No.	Add.	Name	Value Range	Default	Unit	Change
Fd-51	64819	Slave station communication inhibit time	0 ms to 65535 ms	0	ms	Unchangeable
Fd-52	64820	Number of online slave stations	0 to 30	0	-	Unchangeable
Fd-53	64821	Online status of slave stations 1 to 15	0 to 65535	0	-	Unchangeable
Fd-54	64822	Online status of slave stations 16 to 31	0 to 65535	0	-	Unchangeable
Fd-55	64823	PN timeout time	0 ms to 65535 ms	0	ms	At once
Fd-56	64824	PN chip status	0 to 65535	0	-	Unchangeable
Fd-57	64825	Communication card status	0: Initializing 1: Running 2: Stop 3: Reconnecting	0	-	Unchangeable
Fd-61	64829	MAC address 1	0 to 65535	0	-	Unchangeable
Fd-62	64830	MAC address 2	0 to 65535	0	-	Unchangeable
Fd-63	64831	MAC address 3	0 to 65535	0	-	Unchangeable
Fd-70	64838	EtherCAT station name	0 to 65535	0	-	Unchangeable
Fd-71	64839	EtherCAT station alias	0 to 65535	0	-	At once
Fd-72	64840	Number of synchronization interrupts allowed by EtherCAT	0 to 30	10	-	At once
Fd-73	64841	EtherCAT - Port0 CRC error	0 to 65535	0	-	Unchangeable
Fd-74	64842	EtherCAT - Port1 CRC error	0 to 65535	0	-	Unchangeable
Fd-75	64843	EtherCAT port 0/1 data forwarding error	0 to 65535	0	-	Unchangeable
Fd-76	64844	EtherCAT processing unit and PDI error	0 to 65535	0	-	Unchangeable
Fd-77	64845	EtherCAT port 0/1 link loss	0 to 65535	0	-	Unchangeable
Fd-78	64846	EtherCAT master type	0 to 65535	0	-	At once
Fd-79	64847	EtherCAT synchronization error monitoring mode	0 to 1	0	-	At once
Fd-80	64848	EtherCAT synchronization frame loss count	0 to 65535	0	-	Unchangeable
Fd-81	64849	EtherCAT state machine and PHYLink status	0 to 65535	0	-	Unchangeable
Fd-82	64850	EtherCAT - AL fault code	0: No error 1 to 0xFFFF: Error status code	0	-	Unchangeable
Fd-83	64851	EtherCAT - XML file version	0.00 to 655.35	0.00	-	Unchangeable
Fd-84	64852	EtherCAT - FPGA firmware version	0 to 65535	0	-	Unchangeable
Fd-85	64853	Station alias backup display	0 to 65535	0	-	Unchangeable
Fd-86	64854	EtherCAT - EEPROM read time	0 to 65535	0	-	At once
Fd-87	64855	EtherCAT - DC gain	0 to 65535	0	-	At once
Fd-88	64856	EtherCAT - DC acceleration limit	0 to 65535	0	-	At once
Fd-89	64857	EtherCAT - DC speed limit	0 to 65535	0	-	At once

Para. No.	Add.	Name	Value Range	Default	Unit	Change
Fd-90	64858	EtherCAT - DC integral coefficient	0 to 65535	0	-	At once
Fd-91	64859	Communication card version	0.00 to 655.35	0.00	-	Unchangeable
Fd-92	64860	Communication version	0.00 to 655.35	0.00	-	Unchangeable
Fd-93	64861	Station number of device connected to extension card slot 1	0 to 65535	0	-	Unchangeable
Fd-94	64862	Station number of device connected to extension card slot 2	0 to 65535	0	-	Unchangeable
Fd-95	64863	Station number of device connected to extension card slot 3	0 to 65535	0	-	Unchangeable
Fd-96	64864	Station number of device connected to reserved slot 4	0 to 65535	0	-	Unchangeable
Fd-97	64865	Station number of device connected to reserved slot 5	0 to 65535	0	-	Unchangeable
Fd-98	64866	Station number of device connected to reserved slot 6	0 to 65535	0	-	Unchangeable
Fd-99	64867	Station number of device connected to reserved slot 7	0 to 65535	0	-	Unchangeable
FP-00	7936	User password	0 to 65535	0	-	At once
FP-01	7937	Parameter initialization	0: No operation 1: Restore factory defaults 2: Clear records 4: Back up current user parameters 501: Restore user backup parameters	1	-	At once
FP-03	7939	Monitoring parameter display	Bit00: Bus voltage Bit01: Heatsink temperature Bit02: Ambient temperature Bit04: Usr line voltage Bit05: Ust line voltage Bit06: Utr line voltage Bit06: Three-phase unbalance factor	251	-	At once
FP-05	7941	I/O card parameter restoration	0: Invalid 1: Extension I/O1 2: Extension I/O2 3: Extension I/O3 255: All extension I/Os	0	-	At once
FP-06	7942	Local parameter copy mode	1: Copy all parameters 2: Copy non-motor parameters	1	-	At once
FP-07	7943	Local parameter copy action	Ones: Drive unit axis number 1 to 8 Tens: Copy 1: Read 2: Write	0	-	At once

Para. No.	Add.	Name	Value Range	Default	Unit	Change
A0-00	40960	I/O extension card communication cycle	0 to 100	0	-	At once
A0-01	40961	Alarm threshold of consecutive drive unit frame loss	0 to 1000	10	-	At once
A0-02	40962	Alarm threshold of consecutive I/O extension card frame loss	0 to 1000	10	-	At once
A0-03	40963	Display of station number of axis with frame loss	Bit00: Axis 1 Bit01: Axis 2 Bit02: Axis 3 Bit03: Axis 4 Bit04: Axis 5 Bit05: Axis 6 Bit06: Axis 7 Bit07: Axis 8	0	-	Unchangeable
A0-04	40964	Display of station number of I/O extension card with frame loss	Bit00: I/O extension card 1 Bit01: Extension card 2 Bit02: Extension card 3	0	-	Unchangeable
A0-05	40965	Axis 1 - frame loss count	0 to 65535	0	-	Unchangeable
A0-06	40966	Axis 2 - frame loss count	0 to 65535	0	-	Unchangeable
A0-07	40967	Axis 3 - frame loss count	0 to 65535	0	-	Unchangeable
A0-08	40968	Axis 4 - frame loss count	0 to 65535	0	-	Unchangeable
A0-09	40969	Axis 5 - frame loss count	0 to 65535	0	-	Unchangeable
A0-10	40970	Axis 6 - frame loss count	0 to 65535	0	-	Unchangeable
A0-11	40971	Axis 7 - frame loss count	0 to 65535	0	-	Unchangeable
A0-12	40972	Axis 8 - frame loss count	0 to 65535	0	-	Unchangeable
A0-13	40973	Extension card 1 - frame loss count	0 to 65535	0	-	Unchangeable
A0-14	40974	Extension card 2 - frame loss count	0 to 65535	0	-	Unchangeable
A0-15	40975	Extension card 3 - frame loss count	0 to 65535	0	-	Unchangeable
A1-00	41216	Power supply unit - filter time of DI1 to DI4	0.000s to 5.000s	0.010	s	At once
A1-01	41217	Power supply unit - filter time of DI5 to DI8	0.000s to 5.000s	0.010	s	At once
A1-05	41221	AI1 filter time	0.00s to 10.00s	0.10	s	At once
A1-06	41222	AI2 filter time	0.00s to 10.00s	0.10	s	At once
A1-10	41226	AI1 input	0: Voltage input 1: Current input 2: PT100 input 3: PT1000 input 4: KTY84 input 5: PTC130 input	0	-	At stop

Para. No.	Add.	Name	Value Range	Default	Unit	Change
A1-11	41227	AI2 input	0: Voltage input 1: Current input 2: PT100 input 3: PT1000 input 4: KTY84 input 5: PTC130 input	0	-	At stop
A2-00	41472	Extension card 1 - filter time of DI1 to DI4	0.000s to 5.000s	0.010	s	At once
A2-01	41473	Extension card 1 - filter time of DI5 to DI8	0.000s to 5.000s	0.010	s	At once
A2-05	41477	AI1 filter time	0.00s to 10.00s	0.10	s	At once
A2-06	41478	AI2 filter time	0.00s to 10.00s	0.10	s	At once
A2-10	41482	AI1 input	0: Voltage input 1: Current input 2: PT100 input 3: PT1000 input 4: KTY84 input 5: PTC130 input	0	-	At stop
A2-11	41483	AI2 input	0: Voltage input 1: Current input 2: PT100 input 3: PT1000 input 4: KTY84 input 5: PTC130 input	0	-	At stop
A3-00	41728	Extension card 1 - filter time of DI1 to DI4	0.000s to 5.000s	0.010	s	At once
A3-01	41729	Extension card 1 - filter time of DI5 to DI8	0.000s to 5.000s	0.010	s	At once
A3-05	41733	AI1 filter time	0.00s to 10.00s	0.10	s	At once
A3-06	41734	AI2 filter time	0.00s to 10.00s	0.10	s	At once
A3-10	41738	AI1 input	0: Voltage input 1: Current input 2: PT100 input 3: PT1000 input 4: KTY84 input 5: PTC130 input	0	-	At stop
A3-11	41739	AI2 input	0: Voltage input 1: Current input 2: PT100 input 3: PT1000 input 4: KTY84 input 5: PTC130 input	0	-	At stop
AC-00	44032	Power supply unit - AI1 measured voltage 1	0.000 V to 12.000 V	2.000	V	At once
AC-01	44033	Power supply unit - AI1 displayed voltage 1	0.000 V to 12.000 V	2.000	V	At once

Para. No.	Add.	Name	Value Range	Default	Unit	Change
AC-02	44034	Power supply unit - AI1 measured voltage 2	0.000 V to 12.000 V	2.000	V	At once
AC-03	44035	Power supply unit - AI1 displayed voltage 2	0.000 V to 12.000 V	2.000	V	At once
AC-04	44036	Power supply unit - AI2 measured voltage 1	0.000 V to 12.000 V	2.000	V	At once
AC-05	44037	Power supply unit - AI2 displayed voltage 1	0.000 V to 12.000 V	2.000	V	At once
AC-06	44038	Power supply unit - AI2 measured voltage 2	0.000 V to 12.000 V	2.000	V	At once
AC-07	44039	Power supply unit - AI2 displayed voltage 2	0.000 V to 12.000 V	2.000	V	At once
AC-08	44040	Extension card 1 - AI1 measured voltage 1	0.000 V to 12.000 V	2.000	V	At once
AC-09	44041	Extension card 1 - AI1 displayed voltage 1	0.000 V to 12.000 V	2.000	V	At once
AC-10	44042	Extension card 1 - AI1 measured voltage 2	0.000 V to 12.000 V	2.000	V	At once
AC-11	44043	Extension card 1 - AI1 displayed voltage 2	0.000 V to 12.000 V	2.000	V	At once
AC-12	44044	Extension card 1 - AI2 measured voltage 1	0.000 V to 12.000 V	2.000	V	At once
AC-13	44045	Extension card 1 - AI2 displayed voltage 1	0.000 V to 12.000 V	2.000	V	At once
AC-14	44046	Extension card 1 - AI2 measured voltage 2	0.000 V to 12.000 V	2.000	V	At once
AC-15	44047	Extension card 1 - AI2 displayed voltage 2	0.000 V to 12.000 V	2.000	V	At once
AC-16	44048	Extension card 2 - AI1 measured voltage 1	0.000 V to 12.000 V	2.000	V	At once
AC-17	44049	Extension card 2 - AI1 measured voltage 1	0.000 V to 12.000 V	2.000	V	At once
AC-18	44050	Extension card 2 - AI1 measured voltage 2	0.000 V to 12.000 V	2.000	V	At once
AC-19	44051	Extension card 2 - AI1 displayed voltage 2	0.000 V to 12.000 V	2.000	V	At once
AC-20	44052	Extension card 2 - AI2 measured voltage 1	0.000 V to 12.000 V	2.000	V	At once
AC-21	44053	Extension card 2 - AI2 displayed voltage 1	0.000 V to 12.000 V	2.000	V	At once
AC-22	44054	Extension card 2 - AI2 measured voltage 2	0.000 V to 12.000 V	2.000	V	At once
AC-23	44055	Extension card 2 - AI2 displayed voltage 2	0.000 V to 12.000 V	2.000	V	At once

Para. No.	Add.	Name	Value Range	Default	Unit	Change
AC-24	44056	Extension card 3 - AI1 measured voltage 1	0.000 V to 12.000 V	2.000	V	At once
AC-25	44057	Extension card 3 - AI1 measured voltage 1	0.000 V to 12.000 V	2.000	V	At once
AC-26	44058	Extension card 3 - AI1 measured voltage 2	0.000 V to 12.000 V	2.000	V	At once
AC-27	44059	Extension card 3 - AI1 displayed voltage 2	0.000 V to 12.000 V	2.000	V	At once
AC-28	44060	Extension card 3 - AI2 measured voltage 1	0.000 V to 12.000 V	2.000	V	At once
AC-29	44061	Extension card 3 - AI2 displayed voltage 1	0.000 V to 12.000 V	2.000	V	At once
AC-30	44062	Extension card 3 - AI2 measured voltage 2	0.000 V to 12.000 V	2.000	V	At once
AC-31	44063	Extension card 3 - AI2 displayed voltage 2	0.000 V to 12.000 V	2.000	V	At once
AF-00	44800	RPDO1-SubIndex0-H	0 to 65535	0	-	At once
AF-01	44801	RPDO1-SubIndex0-L	0 to 65535	0	-	At once
AF-02	44802	RPDO1-SubIndex1-H	0 to 65535	0	-	At once
AF-03	44803	RPDO1-SubIndex1-L	0 to 65535	0	-	At once
AF-04	44804	RPDO1-SubIndex2-H	0 to 65535	0	-	At once
AF-05	44805	RPDO1-SubIndex2-L	0 to 65535	0	-	At once
AF-06	44806	RPDO1-SubIndex3-H	0 to 65535	0	-	At once
AF-07	44807	RPDO1-SubIndex3-L	0 to 65535	0	-	At once
AF-08	44808	RPDO2-SubIndex0-H	0 to 65535	0	-	At once
AF-09	44809	RPDO2-SubIndex0-L	0 to 65535	0	-	At once
AF-10	44810	RPDO2-SubIndex1-H	0 to 65535	0	-	At once
AF-11	44811	RPDO2-SubIndex1-L	0 to 65535	0	-	At once
AF-12	44812	RPDO2-SubIndex2-H	0 to 65535	0	-	At once
AF-13	44813	RPDO2-SubIndex2-L	0 to 65535	0	-	At once
AF-14	44814	RPDO2-SubIndex3-H	0 to 65535	0	-	At once
AF-15	44815	RPDO2-SubIndex3-L	0 to 65535	0	-	At once
AF-16	44816	RPDO3-SubIndex0-H	0 to 65535	0	-	At once
AF-17	44817	RPDO3-SubIndex0-L	0 to 65535	0	-	At once
AF-18	44818	RPDO3-SubIndex1-H	0 to 65535	0	-	At once
AF-19	44819	RPDO3-SubIndex1-L	0 to 65535	0	-	At once
AF-20	44820	RPDO3-SubIndex2-H	0 to 65535	0	-	At once
AF-21	44821	RPDO3-SubIndex2-L	0 to 65535	0	-	At once
AF-22	44822	RPDO3-SubIndex3-H	0 to 65535	0	-	At once
AF-23	44823	RPDO3-SubIndex3-L	0 to 65535	0	-	At once
AF-24	44824	RPDO4-SubIndex0-H	0 to 65535	0	-	At once
AF-25	44825	RPDO4-SubIndex0-L	0 to 65535	0	-	At once
AF-26	44826	RPDO4-SubIndex1-H	0 to 65535	0	-	At once
AF-27	44827	RPDO4-SubIndex1-L	0 to 65535	0	-	At once

Para. No.	Add.	Name	Value Range	Default	Unit	Change
AF-28	44828	RPDO4-SubIndex2-H	0 to 65535	0	-	At once
AF-29	44829	RPDO4-SubIndex2-L	0 to 65535	0	-	At once
AF-30	44830	RPDO4-SubIndex3-H	0 to 65535	0	-	At once
AF-31	44831	RPDO4-SubIndex3-L	0 to 65535	0	-	At once
AF-32	44832	TPDO1-SubIndexO-H	0 to 65535	0	-	At once
AF-33	44833	TPDO1-SubIndexO-L	0 to 65535	0	-	At once
AF-34	44834	TPDO1-SubIndex1-H	0 to 65535	0	-	At once
AF-35	44835	TPDO1-SubIndex1-L	0 to 65535	0	-	At once
AF-36	44836	TPDO1-SubIndex2-H	0 to 65535	0	-	At once
AF-37	44837	TPDO1-SubIndex2-L	0 to 65535	0	-	At once
AF-38	44838	TPDO1-SubIndex3-H	0 to 65535	0	-	At once
AF-39	44839	TPDO1-SubIndex3-L	0 to 65535	0	-	At once
AF-40	44840	TPDO2-SubIndex0-H	0 to 65535	0	-	At once
AF-41	44841	TPDO2-SubIndex0-L	0 to 65535	0	-	At once
AF-42	44842	TPDO2-SubIndex1-H	0 to 65535	0	-	At once
AF-43	44843	TPDO2-SubIndex1-L	0 to 65535	0	-	At once
AF-44	44844	TPDO2-SubIndex2-H	0 to 65535	0	-	At once
AF-45	44845	TPDO2-SubIndex2-L	0 to 65535	0	-	At once
AF-46	44846	TPDO2-SubIndex3-H	0 to 65535	0	-	At once
AF-47	44847	TPDO2-SubIndex3-L	0 to 65535	0	-	At once
AF-48	44848	TPDO3-SubIndex0-H	0 to 65535	0	-	At once
AF-49	44849	TPDO3-SubIndex0-L	0 to 65535	0	-	At once
AF-50	44850	TPDO3-SubIndex1-H	0 to 65535	0	-	At once
AF-51	44851	TPDO3-SubIndex1-L	0 to 65535	0	-	At once
AF-52	44852	TPDO3-SubIndex2-H	0 to 65535	0	-	At once
AF-53	44853	TPDO3-SubIndex2-L	0 to 65535	0	-	At once
AF-54	44854	TPDO3-SubIndex3-H	0 to 65535	0	-	At once
AF-55	44855	TPDO3-SubIndex3-L	0 to 65535	0	-	At once
AF-56	44856	TPDO4-SubIndex0-H	0 to 65535	0	-	At once
AF-57	44857	TPDO4-SubIndex0-L	0 to 65535	0	-	At once
AF-58	44858	TPDO4-SubIndex1-H	0 to 65535	0	-	At once
AF-59	44859	TPDO4-SubIndex1-L	0 to 65535	0	-	At once
AF-60	44860	TPDO4-SubIndex2-H	0 to 65535	0	-	At once
AF-61	44861	TPDO4-SubIndex2-L	0 to 65535	0	-	At once
AF-62	44862	TPDO4-SubIndex3-H	0 to 65535	0	-	At once
AF-63	44863	TPDO4-SubIndex3-L	0 to 65535	0	-	At once
AF-66	44866	Number of valid RPDOs	0 to 65535	0	-	Unchangeable
AF-67	44867	Number of valid TPDOs	0 to 65535	0	-	Unchangeable
U0-00	28672	Bus voltage	0 V to 1000 V	0	V	Unchangeable
U0-01	28673	Heatsink temperature	–50°C to +150°C	0	°C	Unchangeable
U0-02	28674	Ambient temperature	–50°C to +150°C	0	°C	Unchangeable
U0-04	28676	Input voltage Usr	0 V to 1000 V	0	V	Unchangeable
U0-05	28677	Input voltage Ust	0 V to 1000 V	0	V	Unchangeable

Para. No.	Add.	Name	Value Range	Default	Unit	Change
U0-06	28678	Input voltage Utr	0 V to 1000 V	0	V	Unchangeable
U0-07	28679	Three-phase unbalance factor	0.0% to 100.0%	1	%	Unchangeable
U0-12	28684	Current fault code	0 to 100	0	-	Unchangeable
U0-13	28685	Current fault subcode	0 to 100	0	-	Unchangeable
U0-14	28686	Current alarm code	0 to 100	0	-	Unchangeable
U0-15	28687	Current alarm subcode	0 to 100	0	-	Unchangeable
U0-16	28688	Online module list	0 to 65535	0	-	Unchangeable
U0-17	28689	Number of online modules	0 to 8	0	-	Unchangeable
U0-18	28690	Number of online I/O modules	0 to 3	0	-	Unchangeable
U0-19	28692	Current power-on duration (hour)	0 h to 65535 h	0	h	Unchangeable
U0-20	28693	Current power-on duration (minute)	0 min to 60 min	0	min	Unchangeable
U0-21	28694	Current power-on duration (second)	0s to 60s	0	s	Unchangeable
U0-23	28695	Current power-on duration (millisecond)	0 ms to 1000 ms	0	ms	Unchangeable
U0-25	28697	Braking unit control command word	0: Braking disabled 1: Braking	0	-	Unchangeable
U0-30	28702	Total power-on duration (hour)	0 h to 65535 h	0	h	Unchangeable
U0-31	28703	Total power-on duration (minute)	0 min to 60 min	0	min	Unchangeable
U0-32	28704	Total power-on duration (second)	0s to 60s	0	s	Unchangeable
U0-33	28705	Total power-on duration (millisecond)	0 ms to 1000 ms	0	ms	Unchangeable
U0-35	28707	Power supply unit status	0: No RST input 1: Normal operation 2: Fault state	0	-	Unchangeable
U2-00	29184	Power supply unit I/O type	0 to 65535	0	-	Unchangeable
U2-01	29185	Power supply unit I/O version	0.00 to 655.35	2	-	Unchangeable
U2-02	29186	Power supply unit I/O - original DI hardware resource	0 to 8	0	-	Unchangeable
U2-03	29187	Power supply unit I/O - available DI hardware resource	0 to 8	0	-	Unchangeable
U2-04	29188	Power supply unit I/O - original AI hardware resource	0 to 2	0	-	Unchangeable
U2-05	29189	Power supply unit I/O - available AI hardware resource	0 to 2	0	-	Unchangeable
U2-06	29190	Power supply unit I/O - original DO hardware resource	0 to 8	0	-	Unchangeable
U2-07	29191	Power supply unit I/O - available DO hardware resource	0 to 8	0	-	Unchangeable
U2-08	29192	Power supply unit I/O - original AO hardware resource	0 to 2	0	-	Unchangeable

Para. No.	Add.	Name	Value Range	Default	Unit	Change
U2-09	29193	Power supply unit I/O - available AO hardware resource	0 to 2	0	-	Unchangeable
U2-10	29194	Power supply unit I/O - DI input	0 to 65535	0	-	Unchangeable
U2-11	29195	Power supply unit I/O - DO output	0 to 65535	0	-	Unchangeable
U2-12	29196	Local - AI1 input (before correction)	–10.000 V to +10.000 V	0.000	V	Unchangeable
U2-13	29197	Local - AI2 input (before correction)	–10.000 V to +10.000 V	0.000	V	Unchangeable
U2-14	29198	Local - AI1 input (after correction)	–10.00 V to +10.00 V	0.00	V	Unchangeable
U2-15	29199	Local - AI2 input (after correction)	–10.00 V to +10.00 V	0.00	V	Unchangeable
U2-20	29204	Power supply unit I/O - usage of DI1 by drive unit	0 to 8	0	-	Unchangeable
U2-21	29205	Power supply unit I/O - usage of DI2 by drive unit	0 to 8	0	-	Unchangeable
U2-22	29206	Power supply unit I/O - usage of DI3 by drive unit	0 to 8	0	-	Unchangeable
U2-23	29207	Power supply unit I/O - usage of DI4 by drive unit	0 to 8	0	-	Unchangeable
U2-24	29208	Power supply unit I/O - usage of DI5 by drive unit	0 to 8	0	-	Unchangeable
U2-25	29209	Power supply unit I/O - usage of DI6 by drive unit	0 to 8	0	-	Unchangeable
U2-26	29210	Power supply unit I/O - usage of DI7 by drive unit	0 to 8	0	-	Unchangeable
U2-27	29211	Power supply unit I/O - usage of DI8 by drive unit	0 to 8	0	-	Unchangeable
U2-30	29214	Power supply unit I/O - usage of AI1 by drive unit	0 to 2	0	-	Unchangeable
U2-31	29215	Power supply unit I/O - usage of AI2 by drive unit	0 to 2	0	-	Unchangeable
U2-40	29224	Power supply unit I/O - usage of DO1 by drive unit	0 to 8	0	-	Unchangeable
U2-41	29225	Power supply unit I/O - usage of DO2 by drive unit	0 to 8	0	-	Unchangeable
U2-42	29226	Power supply unit I/O - usage of DO3 by drive unit	0 to 8	0	-	Unchangeable
U2-43	29227	Power supply unit I/O - usage of DO4 by drive unit	0 to 8	0	-	Unchangeable
U2-44	29228	Power supply unit I/O - usage of DO5 by drive unit	0 to 8	0	-	Unchangeable
U2-45	29229	Power supply unit I/O - usage of DO6 by drive unit	0 to 8	0	-	Unchangeable
U2-46	29230	Power supply unit I/O - usage of DO7 by drive unit	0 to 8	0	-	Unchangeable

Para. No.	Add.	Name	Value Range	Default	Unit	Change
U2-47	29231	Power supply unit I/O - usage of DO8 by drive unit	0 to 8	0	-	Unchangeable
U3-00	29440	Type of I/O extension card 1	0 to 65535	0	-	Unchangeable
U3-01	29441	Version of I/O extension card 1	0.00 to 655.35	2	-	Unchangeable
U3-02	29442	I/O extension card 1 - original DI hardware resource	0 to 8	0	-	Unchangeable
U3-03	29443	I/O extension card 1 - available DI hardware resource	0 to 8	0	-	Unchangeable
U3-04	29444	I/O extension card 1 - original AI hardware resource	0 to 2	0	-	Unchangeable
U3-05	29445	I/O extension card 1 - available AI hardware resource	0 to 2	0	-	Unchangeable
U3-06	29446	I/O extension card 1 - original DO hardware resource	0 to 8	0	-	Unchangeable
U3-07	29447	I/O extension card 1 - available DO hardware resource	0 to 8	0	-	Unchangeable
U3-08	29448	I/O extension card 1 - original AO hardware resource	0 to 2	0	-	Unchangeable
U3-09	29449	I/O extension card 1 - available AO hardware resource	0 to 2	0	-	Unchangeable
U3-10	29450	DI input of I/O extension card 1	0 to 65535	0	-	Unchangeable
U3-11	29451	DO output of I/O extension card 1	0 to 65535	0	-	Unchangeable
U3-12	29452	I/O extension card 1 - AI1 input (before correction)	–10.000 V to +10.000 V	0.000	V	Unchangeable
U3-13	29453	I/O extension card 1 - AI2 input (before correction)	–10.000 V to +10.000 V	0.000	V	Unchangeable
U3-14	29454	I/O extension card 1 - AI1 input (after correction)	–10.00 V to +10.00 V	0.00	V	Unchangeable
U3-15	29455	I/O extension card 1 - AI2 input (after correction)	–10.00 V to +10.00 V	0.00	V	Unchangeable
U3-20	29460	I/O extension card 1 - usage of DI1 by drive unit	0 to 8	0	-	Unchangeable
U3-21	29461	I/O extension card 1 - usage of DI2 by drive unit	0 to 8	0	-	Unchangeable
U3-22	29462	I/O extension card 1 - usage of DI3 by drive unit	0 to 8	0	-	Unchangeable
U3-23	29463	I/O extension card 1 - usage of DI4 by drive unit	0 to 8	0	-	Unchangeable
U3-24	29464	I/O extension card 1 - usage of DI5 by drive unit	0 to 8	0	-	Unchangeable
U3-25	29465	I/O extension card 1 - usage of DI6 by drive unit	0 to 8	0	-	Unchangeable
U3-26	29466	I/O extension card 1 - usage of DI7 by drive unit	0 to 8	0	-	Unchangeable

Para. No.	Add.	Name	Value Range	Default	Unit	Change
U3-27	29467	I/O extension card 1 - usage of DI8 by drive unit	0 to 8	0	-	Unchangeable
U3-30	29470	I/O extension card 1 - usage of AI1 by drive unit	0 to 2	0	-	Unchangeable
U3-31	29471	I/O extension card 1 - usage of AI2 by drive unit	0 to 2	0	-	Unchangeable
U3-40	29480	I/O extension card 1 - usage of DO1 by drive unit	0 to 8	0	-	Unchangeable
U3-41	29481	I/O extension card 1 - usage of DO2 by drive unit	0 to 8	0	-	Unchangeable
U3-42	29482	I/O extension card 1 - usage of DO3 by drive unit	0 to 8	0	-	Unchangeable
U3-43	29483	I/O extension card 1 - usage of DO4 by drive unit	0 to 8	0	-	Unchangeable
U3-44	29484	I/O extension card 1 - usage of DO5 by drive unit	0 to 8	0	-	Unchangeable
U3-45	29485	I/O extension card 1 - usage of DO6 by drive unit	0 to 8	0	-	Unchangeable
U3-46	29486	I/O extension card 1 - usage of DO7 by drive unit	0 to 8	0	-	Unchangeable
U3-47	29487	I/O extension card 1 - usage of DO8 by drive unit	0 to 8	0	-	Unchangeable
U4-00	29696	Type of I/O extension card 2	0 to 65535	0	-	Unchangeable
U4-01	29697	Version of I/O extension card 2	0.00 to 655.35	2	-	Unchangeable
U4-02	29698	I/O extension card 2 - original DI hardware resource	0 to 8	0	-	Unchangeable
U4-03	29699	I/O extension card 2 - available DI hardware resource	0 to 8	0	-	Unchangeable
U4-04	29700	I/O extension card 2 - original AI hardware resource	0 to 2	0	-	Unchangeable
U4-05	29701	I/O extension card 2 - available AI hardware resource	0 to 2	0	-	Unchangeable
U4-06	29702	I/O extension card 2 - original DO hardware resource	0 to 8	0	-	Unchangeable
U4-07	29703	I/O extension card 2 - available DO hardware resource	0 to 8	0	-	Unchangeable
U4-08	29704	I/O extension card 2 - original AO hardware resource	0 to 2	0	-	Unchangeable
U4-09	29705	I/O extension card 2 - available AO hardware resource	0 to 2	0	-	Unchangeable
U4-10	29706	I/O extension card 2 - DI input	0 to 65535	0	-	Unchangeable
U4-11	29707	I/O extension card 2 - DO output	0 to 65535	0	-	Unchangeable
U4-12	29708	I/O extension card 2 - AI1 input (before correction)	–10.000 V to +10.000 V	0.000	V	Unchangeable

Para. No.	Add.	Name	Value Range	Default	Unit	Change
U4-13	29709	I/O extension card 2 - AI2 input (before correction)	–10.000 V to +10.000 V	0.000	V	Unchangeable
U4-14	29710	I/O extension card 2 - AI1 input (after correction)	–10.00 V to +10.00 V	0.00	V	Unchangeable
U4-15	29711	I/O extension card 2 - AI2 input (after correction)	–10.00 V to +10.00 V	0.00	V	Unchangeable
U4-20	29716	I/O extension card 2 - usage of DI1 by drive unit	0 to 8	0	-	Unchangeable
U4-21	29717	I/O extension card 2 - usage of DI2 by drive unit	0 to 8	0	-	Unchangeable
U4-22	29718	I/O extension card 2 - usage of DI3 by drive unit	0 to 8	0	-	Unchangeable
U4-23	29719	I/O extension card 2 - usage of DI4 by drive unit	0 to 8	0	-	Unchangeable
U4-24	29720	I/O extension card 2 - usage of DI5 by drive unit	0 to 8	0	-	Unchangeable
U4-25	29721	I/O extension card 2 - usage of DI6 by drive unit	0 to 8	0	-	Unchangeable
U4-26	29722	I/O extension card 2 - usage of DI7 by drive unit	0 to 8	0	-	Unchangeable
U4-27	29723	I/O extension card 2 - usage of DI8 by drive unit	0 to 8	0	-	Unchangeable
U4-30	29726	I/O extension card 2 - usage of AI1 by drive unit	0 to 2	0	-	Unchangeable
U4-31	29727	I/O extension card 2 - usage of AI2 by drive unit	0 to 2	0	-	Unchangeable
U4-40	29736	I/O extension card 2 - usage of DO1 by drive unit	0 to 8	0	-	Unchangeable
U4-41	29737	I/O extension card 2 - usage of DO2 by drive unit	0 to 8	0	-	Unchangeable
U4-42	29738	I/O extension card 2 - usage of DO3 by drive unit	0 to 8	0	-	Unchangeable
U4-43	29739	I/O extension card 2 - usage of DO4 by drive unit	0 to 8	0	-	Unchangeable
U4-44	29740	I/O extension card 2 - usage of DO5 by drive unit	0 to 8	0	-	Unchangeable
U4-45	29741	I/O extension card 2 - usage of DO6 by drive unit	0 to 8	0	-	Unchangeable
U4-46	29742	I/O extension card 2 - usage of DO7 by drive unit	0 to 8	0	-	Unchangeable
U4-47	29743	I/O extension card 2 - usage of DO8 by drive unit	0 to 8	0	-	Unchangeable

Table 4–2 Function parameters of drive unit

Para. No.	Add.	Name	Value Range	Default	Unit	Change
F0-00	61440	G/P type	1: G type (constant-torque load) 2: P type (fan and pump)	Model dependent	-	Unchangeable
F0-01	61441	Motor 1 control mode	0: SVC 1: Reserved 2: V/f control 3: Reserved 4: Reserved 5: VC++	2	-	At stop
F0-02	61442	Command source	0: Operating panel of the power supply unit/LCD operating panel/Software tool 1: Terminal 2: Communication	0	-	At stop
F0-03	61443	Main frequency source X	0: Digital setting (preset frequency (F0-08) that can be changed by pressing UP/DOWN, non-retentive at power failure) 1: Digital setting (preset frequency (F0-08) that can be changed by pressing UP/DOWN, retentive at power failure) 2: AI1 3: AI2 4: AI3 5: Reserved 6: Multi-reference 7: Simple PLC 8: PID 9: Communication 10: Reserved	0	-	At stop
F0-04	61444	Auxiliary frequency source Y	0: Digital setting (preset frequency (F0-08) that can be changed by pressing UP/DOWN, non-retentive at power failure) 1: Digital setting (preset frequency (F0-08) that can be changed by pressing UP/DOWN, retentive at power failure) 2: AI1 3: AI2 4: AI3 5: Reserved 6: Multi-reference 7: Simple PLC 8: PID 9: Communication 10: Reserved	0	-	At stop
F0-05	61445	Base value of range of auxiliary frequency source Y for superposition	0: Relative to maximum frequency 1: Relative to main frequency X	0	-	At once

Para. No.	Add.	Name	Value Range	Default	Unit	Change
F0-06	61446	Range of auxiliary frequency source Y for superposition	0% to 150%	100	%	At once
F0-07	61447	Frequency source superposition	Ones: 0: Main frequency reference X 1: Main and auxiliary operation result (based on tens) 2: Switchover between main frequency X and auxiliary frequency Y 3: Switchover between main frequency X and the main and auxiliary operation result 4: Switchover between auxiliary frequency Y and the main and auxiliary operation result Tens: 0: Main + Auxiliary 1: Main – Auxiliary 2: Max. (main, auxiliary) 3: Min. (main, auxiliary) 4: Main x Auxiliary	0	-	At once
F0-08	61448	Preset frequency	0.00 Hz to 655.35 Hz	50.00	Hz	At once
F0-09	61449	Running direction	0: Same as default direction 1: Reverse to default direction	0	-	At once
F0-10	61450	Maximum frequency	50.00 Hz to 600.00 Hz	50.00	Hz	At stop
F0-11	61451	Source of frequency upper limit	0: Frequency upper limit reference (F0-12) 1: AI1 2: AI2 3: AI3 4: Reserved 5: Communication 6: Multi-speed reference	0	-	At stop
F0-12	61452	Frequency upper limit	0.00 Hz to 655.35 Hz	50.00	Hz	At once
F0-13	61453	Frequency upper limit offset	0.00 Hz to 655.35 Hz	0.00	Hz	At once
F0-14	61454	Frequency lower limit	0.00 Hz to 655.35 Hz	0.00	Hz	At once
F0-15	61455	Carrier frequency	0.8 kHz to 15.0 kHz	Model dependent	kHz	At once
F0-16	61456	Carrier frequency adjusted with temperature	0: No 1: Yes	1	-	At once
F0-17	61457	Acceleration time 1	0.0s to 6500.0s	20.0	s	At once
F0-18	61458	Deceleration time 1	0.0s to 6500.0s	20.0	s	At once

Para. No.	Add.	Name	Value Range	Default	Unit	Change
F0-19	61459	Acceleration/ Deceleration time unit	0: 1s 1: 0.1s 2: 0.01s	1	-	At stop
F0-21	61461	Offset of auxiliary frequency source during superposition	0.00 Hz to 655.35 Hz	0.00	Hz	At once
F0-22	61462	Frequency reference resolution	1: 0.1 Hz 2: 0.01 Hz	2	Hz	At stop
F0-23	61463	Retention of digital setting of frequency upon stop	0: Non-retentive 1: Retentive	0	-	At once
F0-25	61465	Acceleration/ Deceleration time base frequency	0: Maximum frequency (F0-10) 1: Frequency reference 2: 100 Hz	0	-	At stop
F0-26	61466	Base frequency for UP/DOWN modification during running	0: Running frequency 1: Frequency reference	0	-	At stop
F0-27	61467	Main frequency coefficient	0.00% to 100.00%	10.00	%	At once
F0-28	61468	Auxiliary frequency coefficient	0.00% to 100.00%	10.00	%	At once
F0-29	61469	G/P model	1-2	1	-	At stop
F1-00	61696	Motor type selection	0: Common asynchronous motor 1: Variable frequency asynchronous motor 2: Synchronous motor	0	-	At stop
F1-01	61697	Rated motor power	0.1 kW to 1000.0 kW	Model dependent	kW	At stop
F1-02	61698	Rated motor voltage	1 V to 2000 V	Model dependent	V	At stop
F1-03	61699	Rated motor current	0.1 A to 6553.5 A	Model dependent	A	At stop
F1-04	61700	Rated motor frequency	0.01 Hz to 655.35 Hz	Model dependent	Hz	At stop
F1-05	61701	Rated motor speed	1 RPM to 65535 RPM	Model dependent	RPM	At stop
F1-06	61702	Asynchronous motor stator resistance	0.001 Ω to 65.535 Ω	Model dependent	Ω	At stop
F1-07	61703	Asynchronous motor rotor resistance	0.001 Ω to 65.535 Ω	Model dependent	Ω	At stop
F1-08	61704	Asynchronous motor leakage inductance	0.01 mH to 655.35 mH	Model dependent	mH	At stop
F1-09	61705	Asynchronous motor mutual inductance	0.01 mH to 655.35 mH	Model dependent	mH	At stop

Para. No.	Add.	Name	Value Range	Default	Unit	Change
F1-10	61706	Asynchronous motor no-load current	0.1 A to 6553.5 A	Model dependent	A	At stop
F1-11	61707	Asynchronous motor core saturation coefficient 1	50.0% to 100.0%	86.0	%	At once
F1-12	61708	Asynchronous motor core saturation coefficient 2	100.0% to 150.0%	130.0	%	At once
F1-13	61709	Asynchronous motor core saturation coefficient 3	100.0% to 170.0%	140.0	%	At once
F1-14	61710	Asynchronous motor core saturation coefficient 4	100.0% to 180.0%	150.0	%	At once
F1-17	61713	Synchronous motor axis D inductance	1 mH to 65535 mH	Model dependent	mH	At stop
F1-18	61714	Synchronous motor axis Q inductance	1 mH to 65535 mH	Model dependent	mH	At stop
F1-19	61715	Synchronous motor back EMF coefficient	0.1 V to 6553.5 V	Model dependent	V	At stop
F1-24	61720	Number of motor pole pairs	0 to 65535	0	-	Unchangeable
F1-37	61733	Auto-tuning	0: No auto-tuning 1: Asynchronous motor static auto-tuning 2: Auto-tuning on all parameters of asynchronous motor 3: With-load auto-tuning on all parameters of asynchronous motor 4: Reserved 11: No-load dynamic auto-tuning on synchronous motor (excluding back EMF) 12: No-load dynamic auto-tuning on synchronous motor 13: Static auto-tuning on all parameters of synchronous motor 14: Reserved	0	-	At stop
F2-00	61952	Low-speed speed loop Kp	1 to 200	30	-	At once
F2-01	61953	Low-speed speed loop Ti	0.001s to 10.000s	0.500	s	At once
F2-02	61954	Switchover frequency 1	0.00 Hz to 655.35 Hz	5.00	Hz	At once
F2-03	61955	High-speed speed loop Kp	1 to 200	20	-	At once

Para. No.	Add.	Name	Value Range	Default	Unit	Change
F2-04	61956	High-speed speed loop Ti	0.001s to 10.000s	1.000	s	At once
F2-05	61957	Switchover frequency 2	0.00 Hz to 655.35 Hz	10.00	Hz	At once
F2-06	61958	VC slip compensation gain	50% to 200%	100	%	At once
F2-07	61959	Speed feedback filter time	0.000s to 0.1000s	004	s	At once
F2-08	61960	VC deceleration over-excitation gain	0 to 200	64	-	At once
F2-09	61961	Torque upper limit source in speed control (motoring)	0: Digital setting (F2-10) 1: AI1 2: AI2 3: AI3 4: Reserved 5: Communication 6: Min. (AI1, AI2) 7: Max. (AI1, AI2)	0	-	At once
F2-10	61962	Torque upper limit reference in speed control (motoring)	0.0% to 200.0%	150.0	%	At once
F2-11	61963	Torque upper limit source in speed control (generating)	0: Digital setting (F2-10) 1: AI1 2: AI2 3: AI3 4: Reserved 5: Communication 6: Min. (AI1, AI2) 7: Max. (AI1, AI2) 8: Digital setting (F2-12)	0	-	At once
F2-12	61964	Torque upper limit reference in speed control (generating)	0.0% to 200.0%	150.0	%	At once
F2-13	61965	Low-speed current loop Kp adjustment	0.1 to 10.0	1.0	-	At once
F2-14	61966	Low-speed current loop Ki adjustment	0.1 to 10.0	1.0	-	At once
F2-15	61967	High-speed current loop Kp adjustment	0.1 to 10.0	1.0	-	At once
F2-16	61968	High-speed current loop Ki adjustment	0.1 to 10.0	1.0	-	At once
F2-17	61969	Speed loop Kp upon zero speed lock	1 to 100	30	-	At once
F2-18	61970	Speed loop Ti upon zero speed lock	0.001s to 10.000s	0.500	s	At once

Para. No.	Add.	Name	Value Range	Default	Unit	Change
F2-20	61972	Speed loop switchover frequency upon zero speed lock	0.00 Hz to 655.35 Hz	05	Hz	At once
F2-21	61973	Maximum output voltage coefficient	100 to 110	100	-	At once
F2-22	61974	Output voltage filter time	0.000s to 0.010s	0.000	s	At once
F2-23	61975	Zero speed lock	0: Disabled 1: Enabled	0	-	At stop
F2-24	61976	Overvoltage suppression Kp in vector control mode	0 to 1000	40	-	At once
F2-25	61977	Acceleration compensation gain	0 to 200	0	-	At once
F2-26	61978	Acceleration compensation filter time	0 to 500	10	-	At once
F2-27	61979	Overvoltage suppression in vector control mode	0: Disabled 1: Enabled	1	-	At once
F2-28	61980	Torque filter cut-off frequency	50 Hz to 1000 Hz	500	Hz	At once
F2-29	61981	Synchronous motor initial angle detection current	50 to 180	80	-	At once
F2-30	61982	Speed loop parameter auto-calculation	0: Disabled 1: Enabled	0	-	At stop
F2-31	61983	Expected speed loop bandwidth (high speed)	1.0 Hz to 200.0 Hz	10.0	Hz	At once
F2-32	61984	Expected speed loop bandwidth (low speed)	1.0 Hz to 200.0 Hz	10.0	Hz	At once
F2-33	61985	Expected speed loop bandwidth (zero speed)	1.0 Hz to 200.0 Hz	10.0	Hz	At once
F2-34	61986	Expected speed loop damping ratio (unchanged generally)	0.100 to 65.000	1.000	-	At once
F2-52	62004	Decoupling control	0: Disabled 1: Enabled	0	-	At stop
F2-53	62005	Power limit during generating	0: Disabled 1: Enabled	0	-	At stop

Para. No.	Add.	Name	Value Range	Default	Unit	Change
F2-54	62006	Power limit during generating	0.0% to 200.0%	0.0	%	At stop
F2-55	62007	Flux closed loop mode	0 to 1111	1010	-	At stop
F2-56	62008	AC drive output current upper limit	0.0% to 170.0%	150.0	%	At stop
F3-00	62208	V/f curve reference	0: Linear V/f curve 1: Multi-point V/f curve 2: Square V/f curve 3: 1.2-power V/f curve 4: 1.4-power V/f curve 6: 1.6-power V/f curve 8: 1.8-power V/f curve 10: V/f complete separation mode 11: V/f half separation mode	0	-	At stop
F3-01	62209	Torque boost	0.0% to 30.0%	Model dependent	%	At once
F3-02	62210	Cutoff frequency of torque boost	0.00 Hz to 655.35 Hz	50.00	Hz	At stop
F3-03	62211	Multi-point V/f frequency 1	0.00 Hz to 655.35 Hz	0.00	Hz	At stop
F3-04	62212	Multi-point V/f voltage 1	0.0% to 100.0%	0.0	%	At stop
F3-05	62213	Multi-point V/f frequency 2	0.00 Hz to 655.35 Hz	0.00	Hz	At stop
F3-06	62214	Multi-point V/f voltage 2	0.0% to 100.0%	0.0	%	At stop
F3-07	62215	Multi-point V/f frequency 3	0.00 Hz to 655.35 Hz	0.00	Hz	At stop
F3-08	62216	Multi-point V/f voltage 3	0.0% to 100.0%	0.0	%	At stop
F3-09	62217	V/f slip compensation gain	0.0% to 200.0%	0.0	%	At once
F3-10	62218	V/f overexcitation gain	0 to 200	64	-	At once
F3-11	62219	V/f oscillation suppression gain	0 to 100	Model dependent	-	At once
F3-12	62220	Oscillation suppression gain mode	0: Disabled 3: Enabled	3	-	At stop

Para. No.	Add.	Name	Value Range	Default	Unit	Change
F3-13	62221	Voltage source for V/f separation	0: Digital setting (F3-14) 1: AI1 2: AI2 3: AI3 4: Reserved 5: Multi-reference 6: Simple PLC 7: PID 8: Communication	0	-	At once
F3-14	62222	Voltage digital setting for V/f separation	0 V to 65535 V	0	V	At once
F3-15	62223	Voltage rise time of V/f separation	0.0s to 1000.0s	0.0	s	At once
F3-16	62224	Voltage decline time of V/f separation	0.0s to 1000.0s	0.0	s	At once
F3-17	62225	Stop mode for V/f separation	0: Frequency and voltage decline to 0 independently 1: Frequency declines after voltage declines to 0	0	-	At stop
F3-18	62226	V/f overcurrent stall action current	50% to 180%	150	%	At stop
F3-19	62227	V/f overcurrent stall	0: Disabled 1: Enabled	1	-	At stop
F3-20	62228	V/f overcurrent stall suppression gain	0 to 100	20	-	At once
F3-21	62229	Compensation coefficient of V/f speed multiplying overcurrent stall action current	50 to 180	50	-	At stop
F3-22	62230	V/f overvoltage stall action voltage	330.0 V to 800.0 V	Three-phase 400 V: 770.0 V Single-phase 200 V: 370.0 V	V	At stop
F3-23	62231	V/f overvoltage stall	0: Disabled 1: Enabled	1	-	At stop
F3-24	62232	Frequency gain for V/f overvoltage stall suppression	0 to 100	30	-	At once
F3-25	62233	Voltage gain for V/f overvoltage stall suppression	0 to 100	30	-	At once
F3-26	62234	Frequency rise threshold during overvoltage stall	0 to 50	5	-	At stop

Para. No.	Add.	Name	Value Range	Default	Unit	Change
F3-27	62235	Slip compensation time constant	0.1 to 10.0	0.5	-	At once
F3-28	62236	Automatic frequency rise	0: Disabled 1: Enabled	0	-	At stop
F3-29	62237	Minimum motoring torque current	10 to 100	50	-	At stop
F3-30	62238	Maximum generating torque current	10 to 100	20	-	At stop
F3-31	62239	Automatic frequency rise Kp	0 to 100	50	-	At once
F3-32	62240	Automatic frequency rise Ki	0 to 100	50	-	At once
F3-33	62241	Online torque compensation gain	80 to 150	100	-	At stop
F4-00	62464	DI1 hardware source	0: Not selected 1: Power supply unit - DI1 2: Power supply unit - DI2 3: Power supply unit - DI3 4: Power supply unit - DI4 5: Power supply unit - DIO1 6: Power supply unit - DIO2 7: Power supply unit - DIO3 8: Power supply unit - DIO4 101: Extension card 1 - DI1 102: Extension card 1 - DI2 103: Extension card 1 - DI3 104: Extension card 1 - DI4 105: Extension card 1 - DI5 106: Extension card 1 - DI6 107: Extension card 1 - DI7 108: Extension card 1 - DI8 201: Extension card 2 - DI1 202: Extension card 2 - DI2 203: Extension card 2 - DI3 204: Extension card 2 - DI4 205: Extension card 2 - DI5 206: Extension card 2 - DI6 207: Extension card 2 - DI7 208: Extension card 2 - DI8	0	-	At stop

Para. No.	Add.	Name	Value Range	Default	Unit	Change
F4-01	62465	DI1 function	0: No function 1: Forward run (FWD) or running command 2: Reverse run (REV) or running direction 3: Three-wire control 4: Forward jog (FJOG) 5: Reverse jog (RJOG) 6: Terminal (UP) 7: Terminal (DOWN) 8: Clear UP and DOWN settings (terminal, operation panel) 9: Fault reset (RESET) 10: NO input of external fault 11: NC input of external fault 12: User-defined fault 1 13: User-defined fault 2 14: Multi-reference terminal 1 15: Multi-reference terminal 2 16: Multi-reference terminal 3 17: Multi-reference terminal 4 18: Terminal 1 for acceleration/ deceleration selection 19: Terminal 2 for acceleration/ deceleration selection 20: Acceleration/Deceleration inhibit 21: Command source switchover terminal 1 22: Command source switchover terminal 2 23: Frequency source switchover 24: Switchover between main frequency source X and preset frequency 25: Switchover between auxiliary frequency source Y and preset frequency 26: Frequency modification 27: Counter input 28: Counter reset	1	-	At stop

Para. No.	Add.	Name	Value Range	Default	Unit	Change
(continued)	62465	DI1 function	29: Length count input 30: Length reset 31: PID pause 32: PID integral pause 33: PID parameter switchover 34: PID action direction reversal 35: Torque control inhibited 36: Speed control/Torque control switchover 38: Flying start 39: Immediate DC braking 40: Deceleration DC braking 41: External STOP terminal 1 42: External STOP terminal 2 43: Operation pause 44: Coast to stop 45: Emergency stop 46: Motor selection terminal 47: Clear the current running time 48: Two-wire/three-wire control switchover 49: PLC state reset 50: Wobble pause 54 to 63: Reserved	1	-	At stop
F4-02	62466	DI2 hardware source	Same as F4-00	0	-	At stop
F4-03	62467	DI2 function	Same as F4-01	4	-	At stop
F4-04	62468	DI3 hardware source	Same as F4-00	0	-	At stop
F4-05	62469	DI3 function	Same as F4-01	9	-	At stop
F4-06	62470	DI4 hardware source	Same as F4-00	0	-	At stop
F4-07	62471	DI4 function	Same as F4-01	14	-	At stop
F4-08	62472	DI5 hardware source	Same as F4-00	0	-	At stop
F4-09	62473	DI5 function	Same as F4-01	15	-	At stop
F4-10	62474	DI6 hardware source	Same as F4-00	0	-	At stop
F4-11	62475	DI6 function	Same as F4-01	0	-	At stop
F4-12	62476	DI7 hardware source	Same as F4-00	0	-	At stop
F4-13	62477	DI7 function selection	Same as F4-01	0	-	At stop
F4-14	62478	DI8 hardware source	Same as F4-00	0	-	At stop
F4-15	62479	DI8 function	Same as F4-01	0	-	At stop
F4-17	62481	Terminal control mode	0: Two-wire mode 1 1: Two-wire mode 2 2: Three-wire mode 1 3: Three-wire mode 2	0	-	At stop
F4-18	62482	Terminal UP/DOWN change rate	0.001–65.535 Hz/s	1.000	Hz/s	At once
F4-19	62483	DI1 delay	0.0s to 3600.0s	0.0	s	At once

Para. No.	Add.	Name	Value Range	Default	Unit	Change
F4-20	62484	DI2 delay	0.0s to 3600.0s	0.0	s	At once
F4-21	62485	DI3 delay	0.0s to 3600.0s	0.0	s	At once
F4-22	62486	DI active mode setting 1	Ones: 0: Active high 1: Active low Tens: 0: Active high 1: Active low Hundreds: 0: Active high 1: Active low Thousands: 0: Active high 1: Active low Ten thousands: 0: Active high 1: Active low	0	-	At stop
F4-23	62487	DI active mode setting 2	Ones: 0: Active high 1: Active low Tens: 0: Active high 1: Active low Hundreds: 0: Active high 1: Active low Thousands: 0: Reserved Ten thousands: 0: Reserved	0	-	At stop
F4-25	62489	AI1 hardware source	0: Not selected 1: AI1 of power supply unit 2: AI2 of power supply unit 101: AI1 of extension card 1 102: AI2 of extension card 1 201: AI1 of extension card 2 202: AI2 of extension card 2	0	-	At stop
F4-27	62491	AI2 hardware source	0: Not selected 1: AI1 of power supply unit 2: AI2 of power supply unit 101: AI1 of extension card 1 102: AI2 of extension card 1 201: AI1 of extension card 2 202: AI2 of extension card 2	0	-	At stop

Para. No.	Add.	Name	Value Range	Default	Unit	Change
F4-29	62493	AI3 hardware source	0: Not selected 1: AI1 of power supply unit 2: AI2 of power supply unit 101: AI1 of extension card 1 102: AI2 of extension card 1 201: AI1 of extension card 2 202: AI2 of extension card 2	0	-	At stop
F4-31	62495	AI curve 1 minimum input	–10.00 V to +10.00 V	0.00	V	At once
F4-32	62496	Percentage corresponding to AI curve 1 minimum input	–100.0% to +100.0%	0.0	%	At once
F4-33	62497	AI curve 1 maximum input	–10.00 V to +10.00 V	10.00	V	At once
F4-34	62498	Percentage corresponding to AI curve 1 maximum input	–100.0% to +100.0%	100.0	%	At once
F4-35	62499	AI curve 2 minimum input	–10.00 V to +10.00 V	0.00	V	At once
F4-36	62500	Percentage corresponding to AI curve 2 minimum input	–100.0% to +100.0%	0.0	%	At once
F4-37	62501	AI curve 2 maximum input	–10.00 V to +10.00 V	10.00	V	At once
F4-38	62502	Percentage corresponding to AI curve 2 maximum input	–100.0% to +100.0%	100.0	%	At once
F4-39	62503	AI curve 3 minimum input	–10.00 V to +10.00 V	0.00	V	At once
F4-40	62504	Percentage corresponding to AI curve 3 minimum input	–100.0% to +100.0%	0.0	%	At once
F4-41	62505	AI curve 3 maximum input	–10.00 V to +10.00 V	10.00	V	At once
F4-42	62506	Percentage corresponding to AI curve 3 maximum input	–100.0% to +100.0%	100.0	%	At once

Para. No.	Add.	Name	Value Range	Default	Unit	Change
F4-48	62512	AI curve selection	Ones: 1: Curve 1 (two points) 2: Curve 2 (two points) 3: Curve 3 (two points) 4: Curve 4 (four points) 5: Curve 5 (four points) Tens: 1: Curve 1 (two points) 2: Curve 2 (two points) 3: Curve 3 (two points) 4: Curve 4 (four points) 5: Curve 5 (four points) Hundreds: 1: Curve 1 (two points) 2: Curve 2 (two points) 3: Curve 3 (two points) 4: Curve 4 (four points) 5: Curve 5 (four points)	321	-	At once
F4-49	62513	Setting for the AI lower than the minimum input	Ones: 0: Percentage corresponding to minimum input 1: 0.0% Tens: 0: Percentage corresponding to minimum input 1: 0.0% Hundreds: 0: Percentage corresponding to minimum input 1: 0.0%	0	-	At once

Para. No.	Add.	Name	Value Range	Default	Unit	Change
F5-00	62720	DO1/RO1 hardware source	0: Not selected 1: Power supply unit - DIO1 2: Power supply unit - DIO2 3: Power supply unit - DIO3 4: Power supply unit - DIO4 5: Power supply unit - RO1 101: Extension card 1 - DO1/RO1 102: Extension card 1 - DO2/RO2 103: Extension card 1 - DO3/RO3 104: Extension card 1 - DO4/RO4 105: Extension card 1 - DO5/RO5 106: Extension card 1 - DO6/RO6 107: Extension card 1 - DO7/RO7 108: Extension card 1 - DO8/RO8 201: Extension card 2 - DO1/RO1 202: Extension card 2 - DO2/RO2 203: Extension card 2 - DO3/RO3 204: Extension card 2 - DO4/RO4 205: Extension card 2 - DO5/RO5 206: Extension card 2 - DO6/RO6 207: Extension card 2 - DO7/RO7 208: Extension card 2 - DO8/RO8	0	-	At once

Para. No.	Add.	Name	Value Range	Default	Unit	Change
F5-01	62721	DO1/RO1 function selection	0: No output 1: AC drive running 2: Ready to run 3: Fault 1 (stop at fault) 4: Fault 2 5: Fault 3 6: Exception (direct output upon fault or alarm) 7: Motor overload pre-warning 8: AC drive overload pre-warning 9: AC drive overheat pre-warning 10: AC drive load loss 11: Undervoltage 12: Output current limit exceeded 13: Frequency level detection FDT1 14: Frequency level detection FDT2 15: Frequency reach 16: Frequency 1 reach 17: Frequency 2 reach 18: Frequency upper limit reach 19: Frequency lower limit reach (output even at stop) 20: Frequency lower limit reach (no output at stop) 21: Timing reach 22: Accumulative power-on time reach 23: Accumulative running time reach 24: Current running time reach 25: Zero current state 26: Current 1 reach 27: Current 2 reach 28: IGBT temperature reach	3	-	At once
(Continued)			29: Reference count value reach 30: Designated count value reach 31: Length reach 32: Frequency limited 33: Torque limited 34: AI1 input limit exceeded 35: AI1 > AI2 36: PLC cycle completed 37: Communication 38: STO-EDM 39: Reserved 40: Zero-speed running (no output at stop) 41: Zero-speed running 2 (active at stop) 42: Reserved 43: Reverse running 44 to 50: Reserved	3	-	At once

Para. No.	Add.	Name	Value Range	Default	Unit	Change
F5-02	62722	DO2/RO2 hardware source	Same as F5-00	0	-	At once
F5-03	62723	DO2/RO2 function	Same as F5-01	15	-	At once
F5-04	62724	DO3/RO3 hardware source	Same as F5-00	0	-	At once
F5-05	62725	DO3/RO3 function	Same as F5-01	0	-	At once
F5-06	62726	DO4/RO4 hardware source	Same as F5-00	0	-	At once
F5-07	62727	DO4/RO4 function	Same as F5-01	0	-	At once
F5-08	62728	DO5/RO5 hardware source	Same as F5-00	0	-	At once
F5-09	62729	DO5/RO5 function	Same as F5-01	0	-	At once
F5-10	62730	DO1/RO1 output delay	0.0s to 3600.0s	0.0	s	At once
F5-11	62731	DO2/RO2 output delay	0.0s to 3600.0s	0.0	s	At once
F5-12	62732	DO3/RO3 output delay	0.0s to 3600.0s	0.0	s	At once
F5-13	62733	DO4/RO4 output delay	0.0s to 3600.0s	0.0	s	At once
F5-14	62734	DO5/RO5 output delay	0.0s to 3600.0s	0.0	s	At once
F5-15	62735	DO/RO active mode	Ones : 0: Positive logic 1: Negative logic Tens: 0: Positive logic 1: Negative logic Hundreds: 0: Positive logic 1: Negative logic Thousands : 0: Positive logic 1: Negative logic Ten thousands: 0: Positive logic 1: Negative logic	0	-	At once
F6-00	62976	Startup mode	0: Direct start 1: Flying start (asynchronous motor) 2: Pre-excitation start (asynchronous motor)	0	-	At once
F6-01	62977	Speed tracking mode	0: From stop frequency 1: From 50 Hz 2: From the maximum frequency 3: Fast speed tracking	0	-	At stop

Para. No.	Add.	Name	Value Range	Default	Unit	Change
F6-02	62978	Speed of speed tracking	1 to 100	20	-	At once
F6-03	62979	Startup frequency	0.00 Hz to 10.00 Hz	0.00	Hz	At once
F6-04	62980	Startup frequency hold time	0.0s to 100.0s	0.0	s	At stop
F6-05	62981	DC braking current/ Pre-excitation current at startup	0% to 100%	0	%	At stop
F6-06	62982	DC braking time/Pre-excitation time at startup	0.0s to 100.0s	0.0	s	At stop
F6-07	62983	Acceleration/ Deceleration mode	0: Linear acceleration/deceleration 1: S-curve acceleration/deceleration 2: Four-segment S-curve acceleration/ deceleration	0	-	At stop
F6-10	62986	Stop mode	0: Decelerate to stop 1: Coast to stop	0	-	At once
F6-11	62987	Starting frequency of DC braking at stop	0.00 Hz to 655.35 Hz	0.00	Hz	At once
F6-12	62988	Waiting time of DC braking at stop	0.0s to 100.0s	0.0	s	At once
F6-13	62989	DC braking current at stop	0% to 100%	50	%	At once
F6-14	62990	DC braking time at stop	0.0s to 100.0s	0.5	s	At once
F6-16	62992	Closed loop current Kp of speed tracking	0 to 1000	500	-	At once
F6-17	62993	Closed loop current Ki of speed tracking	0 to 1000	800	-	At once
F6-18	62994	Current of speed tracking	30 to 200	100	-	At once
F6-19	62995	Gain coefficient of fast speed tracking	1.0 to 20.0	10.0	-	At stop
F6-20	62996	Cut-off frequency of fast speed tracking	0.5 Hz to 3.0 Hz	1.1	Hz	At stop
F6-21	62997	Demagnetization time	0.00s to 10.00s	1.00	s	At once
F6-22	62998	Start pre-torque setting	0.0% to 200.0%	0.0	%	At once
F6-23	62999	Operation at command from power supply unit	0: Stop according to F6-10 1: Ignore stop command	0	-	At stop
F6-26	63002	Time proportion of S-curve acceleration start segment	0.0% to 100.0%	30.0	%	At stop

Para. No.	Add.	Name	Value Range	Default	Unit	Change
F6-27	63003	Time proportion of S-curve acceleration end segment	0.0% to 100.0%	30.0	%	At stop
F6-28	63004	Time proportion of S-curve deceleration start segment	0.0% to 100.0%	30.0	%	At stop
F6-29	63005	Time proportion of S-curve deceleration end segment	0.0% to 100.0%	30.0	%	At stop
F6-30	63006	Trial current for synchronous motor speed tracking	5.0% to 50.0%	20.0	%	At stop
F6-31	63007	Minimum tracking frequency for synchronous motor speed tracking	0.0 Hz to 100.0 Hz	0.0	Hz	At stop
F6-32	63008	Angle compensation for synchronous motor speed tracking	0 to 360	0	-	At stop
F6-33	63009	Proportion coefficient of synchronous motor speed tracking	0.1 to 10.0	2.0	-	At stop
F6-34	63010	Integral coefficient of synchronous motor speed tracking	0.1 to 10.0	6.0	-	At stop
F6-35	63011	Reverse running inhibited for speed tracking	0 to 2	0	-	At once
F7-00	63232	IGBT module indicator testing	0 to 2	0	-	At once
F7-01	63233	MF.K key function	0: MF.K key disabled 1: Switchover between operating panel control and remote control (terminal I/O control or communication control) 2: Switchover between forward and reverse run 3: Forward jog 4: Reverse jog	0	-	At stop
F7-02	63234	STOP key function	0: STOP key enabled only in operating panel control mode 1: STOP key enabled in any operating mode	0	-	At once

Para. No.	Add.	Name	Value Range	Default	Unit	Change
F7-03	63235	LED display 1 in running state	Bit00: Running frequency (Hz) Bit01: Frequency reference (Hz) Bit02: Bus voltage (V) Bit03: Output voltage (V) Bit04: Output current (A) Bit05: Output power (kW) Bit06: Output torque (%) Bit07: DI status Bit08: DO status Bit09: AI1 voltage (V) Bit10: AI2 voltage (V) Bit11: AI3 voltage (V) Bit12: Count value Bit13: Length value Bit14: Load speed display Bit15: PID reference	31	-	At once
F7-04	63236	LED display 2 in running state	Bit00: PID feedback Bit01: PLC stage Bit02: Reserved Bit03: Running frequency 2 (Hz) Bit04: Remaining running time Bit05: Reserved Bit06: Reserved Bit07: Reserved Bit08: Linear speed Bit09: Current power-on duration (min) Bit10: Current running time (min) Bit11: Reserved Bit12: Communication Bit13: Reserved Bit14: Main frequency X display Bit15: Auxiliary frequency Y display	0	-	At once
F7-05	63237	LED display at stop	Bit00: Frequency reference (Hz) Bit01: Bus voltage (V) Bit02: DI status Bit03: DO status Bit04: AI1 voltage (V) Bit05: AI2 voltage (V) Bit06: AI3 voltage (V) Bit07: Count value Bit08: Length value Bit09: PLC stage Bit10: Load speed display Bit11: PID reference Bit12: Reserved	51	-	At once
F7-06	63238	STO software version	-		-	Unchangeable
F7-07	63239	Heatsink temperature of IGBT	–20.0°C to +120.0°C	Model dependent	°C	Unchangeable

Para. No.	Add.	Name	Value Range	Default	Unit	Change
F7-08	63240	Product code	0 to 1000	Model dependent	-	Unchangeable
F7-09	63241	Accumulative running time	0 h to 65535 h	Model dependent	h	Unchangeable
F7-10	63242	Performance software version	-	Model dependent	-	Unchangeable
F7-11	63243	Function software version	-	Model dependent	-	Unchangeable
F7-12	63244	Accumulative power-on time	0 h to 65535 h	Model dependent	h	Unchangeable
F7-13	63245	Accumulative power generation	0 kWh to 65535 kWh	Model dependent	kWh	Unchangeable
F7-14	63246	Accumulative power consumption	0 kWh to 65535 kWh	Model dependent	kWh	Unchangeable
F7-15	63247	Temporary performance software version	-	Model dependent	-	Unchangeable
F7-16	63248	Temporary function software version	-	Model dependent	-	Unchangeable
F8-00	63488	Jog frequency	0.00 Hz to 655.35 Hz	2.00	Hz	At once
F8-01	63489	Jog acceleration time	0.0s to 6500.0s	20.0	s	At once
F8-02	63490	Jog deceleration time	0.0s to 6500.0s	20.0	s	At once
F8-03	63491	Acceleration time 2	0.0s to 6500.0s	Model dependent	s	At once
F8-04	63492	Deceleration time 2	0.0s to 6500.0s	Model dependent	s	At once
F8-05	63493	Acceleration time 3	0.0s to 6500.0s	Model dependent	s	At once
F8-06	63494	Deceleration time 3	0.0s to 6500.0s	Model dependent	s	At once
F8-07	63495	Acceleration time 4	0.0s to 6500.0s	Model dependent	s	At once
F8-08	63496	Deceleration time 4	0.0s to 6500.0s	Model dependent	s	At once
F8-09	63497	Jump frequency 1	0.00 Hz to 655.35 Hz	0.00	Hz	At once
F8-10	63498	Jump frequency 2	0.00 Hz to 655.35 Hz	0.00	Hz	At once
F8-11	63499	Jump frequency amplitude	0.00 Hz to 5.00 Hz	0.00	Hz	At once
F8-12	63500	Jump frequency selection during acceleration/ deceleration	0: Disabled 1: Enabled	0	-	At once

Para. No.	Add.	Name	Value Range	Default	Unit	Change
F8-13	63501	Forward/Reverse run switchover dead zone time	0.0s to 3000.0s	0.0	s	At once
F8-14	63502	Reverse run enable	0: Reverse running allowed 1: Reverse running inhibited	0	-	At once
F8-15	63503	Running mode when frequency reference below lower limit	0: Run at lower-limit frequency 1: Stop 2: Zero speed running	0	-	At once
F8-17	63505	Normally open (NO) input of external fault	0: Always active 1: Active only in running	0	-	At stop
F8-18	63506	Normally closed (NC) input of external fault	0: Always active 1: Active only in running	0	-	At stop
F8-19	63507	Accumulative power-on time threshold setting	0 h to 65000 h	0	h	At once
F8-20	63508	Accumulative running time threshold setting	0 h to 65000 h	0	h	At once
F8-21	63509	Startup protection selection	0: Disabled 1: Enabled	0	-	At once
F8-22	63510	Frequency detection value 1 (FDT1)	0.00 Hz to 655.35 Hz	50.00	Hz	At once
F8-23	63511	Frequency detection hysteresis 1 (FDT1)	0.00 to F8-22	2.50	Hz	At once
F8-24	63512	Frequency detection value 2 (FDT2)	0.00 Hz to 655.35 Hz	50.00	Hz	At once
F8-25	63513	Frequency detection hysteresis 2 (FDT2)	0.00 Hz to 655.35 Hz	2.50	Hz	At once
F8-26	63514	Frequency detection range	0.00 Hz to 655.35 Hz	2.50	Hz	At once
F8-27	63515	Detection value 1 for frequency reach	0.00 Hz to 655.35 Hz	50.00	Hz	At once
F8-28	63516	Detection frequency 1 for frequency reach	0.00 to F8-28	2.50	Hz	At once
F8-29	63517	Detection mode for frequency reach 1	0: Always detect 1: No detect during acceleration/ deceleration	0	-	At stop
F8-30	63518	Detection value 2 for frequency reach	0.00 Hz to 655.35 Hz	50.00	Hz	At once
F8-31	63519	Detection frequency 2 for frequency reach	0.00 to F8-28	2.50	Hz	At once
F8-32	63520	Detection mode for frequency reach 2	0: Always detect 1: No detect during acceleration/ deceleration	0	-	At stop

Para. No.	Add.	Name	Value Range	Default	Unit	Change
F8-35	63523	Switchover frequency of acceleration time 1 and acceleration time 2	0.00 Hz to 655.35 Hz	0.00	Hz	At once
F8-36	63524	Switchover frequency of deceleration time 1 and deceleration time 2	0.00 Hz to 655.35 Hz	0.00	Hz	At once
F8-37	63525	Jog preferred	0: Disabled 1: Enabled	0	-	At stop
F8-38	63526	Zero current detection level	0.0% to 300.0%	5.0	%	At once
F8-39	63527	Zero current detection delay	0.01s to 600.00s	0.10	s	At once
F8-40	63528	Output overcurrent threshold	0.0% to 300.0%	200.0	%	At once
F8-41	63529	Software overcurrent detection delay	0.00s to 600.00s	0.00	s	At once
F8-42	63530	Detection level of current 1	0.0% to 300.0%	100.0	%	At once
F8-43	63531	Detection width of current 1	0.0% to 300.0%	0.0	%	At once
F8-44	63532	Detection level of current 2	0.0% to 300.0%	100.0	%	At once
F8-45	63533	Detection width of current 2	0.0% to 300.0%	0.0	%	At once
F8-46	63534	Timing function	0: Disabled 1: Enabled	0	-	At stop
F8-47	63535	Timing duration source	0: Timing duration (specified by F8-48) 1: AI1 2: AI2	0	-	At stop
F8-48	63536	Timing duration	0.0 min to 6500.0 min	0.0	min	At stop
F8-49	63537	AI1 input voltage lower limit	0.00 V to 655.35 V	3.10	V	At once
F8-50	63538	AI1 input voltage upper limit	0.00 V to 11.00 V	6.80	V	At once
F8-51	63539	IGBT temperature reach	0°C to 100°C	75	°C	At once
F8-52	63540	Cooling fan working mode	0: Forward running during drive running 1: Forward running continuously	0	-	At once
F8-54	63542	Wakeup frequency	Hibernation frequency (F8-56) to maximum frequency (F0-10)	0.00	Hz	At once
F8-55	63543	Wakeup delay	0.0s to 6500.0s	0.0	s	At once
F8-56	63544	Hibernation frequency	0.00 Hz to wakeup frequency (F8-54)	0.00	Hz	At once
F8-57	63545	Hibernation delay	0.0s to 6500.0s	0.0	s	At once

Para. No.	Add.	Name	Value Range	Default	Unit	Change
F8-58	63546	Current running time threshold	0.0 min to 6500.0 min	0.0	min	At once
F8-59	63547	Switchover between communication addresses 2000H and 2001H	0: General protocol 1: Special protocol	0	-	At stop
F8-60	63548	Deceleration time for emergency stop	0.0s to 6500.0s	0.0	s	At once
F8-61	63549	LED operating panel jog	-	0	-	Unchangeable
F8-62	63550	Load speed display coefficient	0.0001 to 6.5000	1.0000	-	At once
F8-63	63551	Number of decimal places for load speed display	0: 0 1: 1 2: 2 3: 3	1	-	At once
F8-64	63552	7310H address data unit	0: Hz 1: RPM	0	-	At stop
F9-00	63744	AC drive overload protection	0 to 1	0	-	At once
F9-01	63745	Motor overload protection gain	0.20 to 10.00	1.00	-	At once
F9-02	63746	Motor overload pre-warning coefficient	50% to 100%	80	%	At once
F9-06	63750	Output phase loss detection before startup	0: Disabled 1: Enabled	0	%	At once
F9-07	63751	Detection of short-circuit to ground	0: No detection 1: Detection before power-on	1	-	At stop
F9-09	63753	Auto reset attempts	0 to 20	0	-	At once
F9-10	63754	DO action during auto fault reset	0: Not act 1: Act	0	-	At once
F9-11	63755	Auto reset interval	0.1s to 100.0s	1.0	s	At once
F9-12	63755	Restart interval upon fault reset	0s to 100.0s	1.0	s	At once
F9-13	63757	STO safety state reset mode	0: Manual 1: Auto	0	-	At stop
F9-14	63758	1st fault type	0 to 99	Model dependent	-	Unchangeable
F9-15	63759	2nd fault type	0 to 99	Model dependent	-	Unchangeable
F9-16	63760	3rd (latest) fault type	0 to 99	Model dependent	-	Unchangeable
F9-17	63761	Frequency upon the 3rd (latest) fault	-	Model dependent	-	Unchangeable

Para. No.	Add.	Name	Value Range	Default	Unit	Change
F9-18	63762	Current upon the 3rd (latest) fault	-	Model dependent	-	Unchangeable
F9-19	63763	Bus voltage upon the 3rd (latest) fault	-	Model dependent	-	Unchangeable
F9-20	63764	Input terminal state upon the 3rd (latest) fault	-	Model dependent	-	Unchangeable
F9-21	63765	Output terminal state upon the 3rd (latest) fault	-	Model dependent	-	Unchangeable
F9-22	63766	AC drive state upon the 3rd (latest) fault	-	Model dependent	-	Unchangeable
F9-23	63767	Power-on duration upon the 3rd (latest) fault	-	Model dependent	-	Unchangeable
F9-24	63768	Running time upon the 3rd (latest) fault	-	Model dependent	-	Unchangeable
F9-25	63769	IGBT temperature upon the 3rd (latest) fault	-	Model dependent	-	Unchangeable
F9-26	63770	Fault subcode of the 3rd (latest) fault	-	Model dependent	-	Unchangeable
F9-27	63771	Frequency upon the 2nd fault	-	Model dependent	-	Unchangeable
F9-28	63772	Current upon the 2nd fault	-	Model dependent	-	Unchangeable
F9-29	63773	Bus voltage upon the 2nd fault	-	Model dependent	-	Unchangeable
F9-30	63774	Input terminal state upon the 2nd fault	-	Model dependent	-	Unchangeable
F9-31	63775	Output terminal state upon the 2nd fault	-	Model dependent	-	Unchangeable
F9-32	63776	AC drive state upon the 2nd fault	-	Model dependent	-	Unchangeable
F9-33	63777	Power-on duration upon the 2nd fault	-	Model dependent	-	Unchangeable
F9-34	63778	Running time upon the 2nd fault	-	Model dependent	-	Unchangeable
F9-35	63779	IGBT temperature upon the 2nd fault	-	Model dependent	-	Unchangeable
F9-36	63780	Fault subcode of the 2nd fault	-	Model dependent	-	Unchangeable
F9-37	63781	Frequency upon the 1st fault	-	Model dependent	-	Unchangeable

Para. No.	Add.	Name	Value Range	Default	Unit	Change
F9-38	63782	Current upon the 1st fault	-	Model dependent	-	Unchangeable
F9-39	63783	Bus voltage upon the 1st fault	-	Model dependent	-	Unchangeable
F9-40	63784	Input terminal state upon the 1st fault	-	Model dependent	-	Unchangeable
F9-41	63785	Output terminal state upon the 1st fault	-	Model dependent	-	Unchangeable
F9-42	63786	AC drive state upon the 1st fault	-	Model dependent	-	Unchangeable
F9-43	63787	Power-on duration upon the 1st fault	-	Model dependent	-	Unchangeable
F9-44	63788	Running time upon the 1st fault	-	Model dependent	-	Unchangeable
F9-45	63789	IGBT temperature upon the 1st fault	-	Model dependent	-	Unchangeable
F9-46	63790	Fault subcode of the 1st fault	-	Model dependent	-	Unchangeable
F9-47	63791	Fault protection action selection 0	Ones: Overcurrent during acceleration/ deceleration/constant speed (E2/3/4) 0: Coast to stop 2: Fault reset Tens: Overvoltage during acceleration/ deceleration/constant speed (E5/6/7) 0: Coast to stop 2: Fault reset Hundreds: Reserved 5: Canceled Thousands: Undervoltage (E9) 0: Coast to stop 2: Fault reset Ten thousands: AC drive overload (E10) 0: Coast to stop 2: Fault reset	500	-	At stop

Para. No.	Add.	Name	Value Range	Default	Unit	Change
F9-48	63792	Fault protection action selection 1	Ones: Motor overload (E11) 0: Coast to stop 1: Decelerate to stop 2: Fault reset 4: Warning 5: Canceled Tens: Reserved 0: Coast to stop 1: Decelerate to stop 4: Warning 5: Canceled Hundreds: Output phase loss (E13) 0: Coast to stop 1: Decelerate to stop 2: Fault reset 4: Warning 5: Canceled Thousands: IGBT overtemperature (E14) 0: Coast to stop Ten thousands: External device fault (E15) 0: Coast to stop 1: Decelerate to stop 4: Warning 5: Canceled	10050	-	At stop
F9-49	63793	Fault protection action selection 2	One: Communication fault (E16) 0: Coast to stop 1: Decelerate to stop 4: Warning 5: Canceled Tens: Reserved 5: Canceled Hundreds: Reserved 0: Coast to stop Thousands: Motor auto-tuning fault (E19) 0: Coast to stop 4: Warning 5: Canceled Ten thousands: Reserved 5: Canceled	50050	-	At stop

Para. No.	Add.	Name	Value Range	Default	Unit	Change
F9-50	63794	Fault protection action selection 3	Ones: EEPROM read/write fault (E21) 0: Coast to stop Tens: Motor auto-tuning error (E22) 0: Coast to stop Hundreds: Short circuit to ground (E23) 0: Coast to stop 5: Canceled Thousands: Reserved 5: Canceled Ten thousands: Power supply unit fault (E25) 2: Special action 5: Canceled	25000	-	At stop
F9-51	63795	Fault protection action selection 4	Ones: Accumulative running time reach (E26) 0: Coast to stop 1: Decelerate to stop 4: Warning 5: Canceled Tens: User-defined fault 1 (E27) 0: Coast to stop 1: Decelerate to stop 4: Warning 5: Canceled Hundreds: User-defined fault 2 (E28) 0: Coast to stop 1: Decelerate to stop 4: Warning 5: Canceled Thousands: Accumulative power-on time reach fault (E29) 0: Coast to stop 1: Decelerate to stop 4: Warning 5: Canceled Ten thousands: Load lost (E30) 0: Coast to stop 1: Decelerate to stop 4: Warning 5: Canceled	51111	-	At stop

Para. No.	Add.	Name	Value Range	Default	Unit	Change
F9-52	63796	Fault protection action selection 5	Ones: PID feedback lost during running (E31) 0: Coast to stop 1: Decelerate to stop 4: Warning 5: Canceled Tens: Reserved 5: Canceled Hundreds: Reserved 5: Canceled Thousands: Excessive speed deviation (E42) 0: Coast to stop 1: Decelerate to stop 4: Warning 5: Canceled Ten thousands: Motor overspeed (E43) 0: Coast to stop 1: Decelerate to stop 4: Warning 5: Canceled	551	-	At stop
F9-53	63797	Fault protection action selection 6	One: Motor overtemperature (E45) 0: Coast to stop 1: Decelerate to stop 4: Warning 5: Canceled Tens: Reserved 5: Canceled Hundreds: Reserved 5: Canceled Thousands: Reserved 5: Canceled Ten thousands: Fan fault (E80) 0: Coast to stop 1: Decelerate to stop 5: Canceled	5500	-	At stop
F9-54	63798	Frequency selection for continuing to run upon fault	0: Run at current running frequency 1: Run at frequency reference 2: Run at upper-limit frequency 3: Run at lower-limit frequency 4: Run at backup frequency upon abnormality	1	-	At once
F9-55	63799	Backup frequency reference	0.0% to 100.0%	100.0	%	At once
F9-57	63801	Motor overheat protection threshold 1	0°C to 200°C	110	°C	At once

Para. No.	Add.	Name	Value Range	Default	Unit	Change
F9-58	63802	Motor overheat pre-warning threshold 1	0°C to 200°C	90	°C	At once
F9-59	63803	Motor overheat protection threshold 2	0°C to 200°C	110	°C	At once
F9-60	63804	Motor overheat pre-warning threshold 2	0°C to 200°C	90	°C	At once
F9-61	63805	Motor overheat protection threshold 3	0°C to 200°C	110	°C	At once
F9-62	63806	Motor overheat pre-warning threshold 3	0°C to 200°C	90	°C	At once
F9-63	63807	Power dip ride-through function selection	0: Disabled 1: Decelerate 2: Decelerate to stop	0	-	At stop
F9-64	63808	Threshold for recovering from power dip ride-through	8.0% to 10.0%	8.5	%	At once
F9-65	63809	Duration for judging voltage recovery from power dip	0.0s to 100.0s	0.5	s	At once
F9-66	63810	Threshold for enabling power dip ride-through	60% to 100%	80	%	At once
F9-67	63811	Alarm threshold of consecutive frame loss	1 to 1000	10	-	At stop
F9-68	63812	Load loss detection level	0.0% to 100.0%	10.0	%	At once
F9-69	63813	Load loss detection time	0.1s to 60.0s	1.0	s	At once
F9-73	63817	Excessive speed deviation threshold	0.0% to 50.0%	20.0	%	At once
F9-74	63818	Excessive speed deviation detection time	0.0s to 60.0s	5.0	s	At once
F9-75	63819	Power dip ride-through gain	0 to 100	40	-	At once
F9-76	63820	Power dip ride-through integral	0 to 100	30	-	At once
F9-77	63821	Deceleration time of power dip ride-through	0.0s to 300.0s	20.0	s	At once

Para. No.	Add.	Name	Value Range	Default	Unit	Change
FA-00	64000	PID reference source	0: Digital setting of PID (FA-01) 1: AI1 2: AI2 3: AI3 4: Reserved 5: Communication 6: Multi-reference	0	-	At once
FA-01	64001	Digital setting of PID	0.0% to 100.0%	50.0	%	At once
FA-02	64002	PID feedback source	0: AI1 1: AI2 2: AI3 3: AI1 – AI2 4: Reserved 5: Communication 6: AI1 + AI2 7: Max. (|AI1|, |AI2|) 8: Min. (|AI1|, |AI2|)	0	-	At once
FA-03	64003	PID action direction	0: Forward 1: Reverse	0	-	At once
FA-04	64004	PID reference and feedback range	0 to 65535	1000	-	At once
FA-05	64005	Proportional gain Kp1	0.0 to 1000	20.0	-	At once
FA-06	64006	Integral time Ti1	0.01s to 100.00s	2.00	s	At once
FA-07	64007	Derivative time Td1	0.000s to 10.000s	0.000	s	At once
FA-08	64008	PID output limit in reverse direction	0.00 Hz to 655.35 Hz	2.00	Hz	At once
FA-09	64009	PID deviation limit	0.0% to 100.0%	0.0	%	At once
FA-10	64010	PID differential limit	0.00% to 100.00%	0.10	%	At once
FA-11	64011	PID reference change time	0.00s to 650.00s	0.00	s	At once
FA-12	64012	PID feedback filter time	0.00s to 60.00s	0.00	s	At once
FA-13	64013	PID deviation gain	0.0% to 100.0%	100.0	%	At once
FA-15	64015	Proportional gain Kp2	0.0 to 1000.0	20.0	-	At once
FA-16	64016	Integral time Ti2	0.01s to 100.00s	2.00	s	At once
FA-17	64017	Derivative time Td2	0.000s to 10.000s	0.000	s	At once
FA-18	64018	PID parameter switchover condition	0: No switchover 1: Switchover by DI 2: Automatic switchover based on deviation 3: Switchover based on running frequency 6: Automatic adjustment based on roll diameter 7: Automatic adjustment based on maximum roll diameter percentage	0	-	At once

Para. No.	Add.	Name	Value Range	Default	Unit	Change
FA-19	64019	PID parameter switchover deviation 1	0.0% to 6553.5%	20.0	%	At once
FA-20	64020	PID parameter switchover deviation 2	0.0% to 100.0%	80.0	%	At once
FA-21	64021	PID initial value	0.0% to 100.0%	0.0	%	At once
FA-22	64022	Hold time of PID initial value	0.00s to 650.00s	0.00	s	At once
FA-23	64023	Maximum deviation between two PID outputs in forward direction	0.00% to 100.00%	1.00	%	At once
FA-24	64024	Maximum deviation between two PID outputs in reverse direction	0.00% to 100.00%	1.00	%	At once
FA-25	64025	PID integral property	0: Disabled 1: Enabled	0	-	At once
FA-26	64026	Detection level of PID feedback loss	0.0% to 100.0%	0.0	%	At once
FA-27	64027	Detection time of PID feedback loss	0.0s to 20.0s	0.0	s	At once
Fb-00	64256	Wobble setting mode	0: Relative to central frequency 1: Relative to maximum frequency	0	-	At once
Fb-01	64257	Wobble amplitude	0.0% to 100.0%	0.0	%	At once
Fb-02	64258	Wobble step	0.0% to 50.0%	0.0	%	At once
Fb-03	64259	Wobble cycle	0.1s to 3000.0s	10.0	s	At once
Fb-04	64260	Triangular wave rise time coefficient	0.1% to 100.0%	50.0	%	At once
Fb-05	64261	Reference length	0 m to 65535 m	1000	m	At once
Fb-06	64262	Actual length	0 m to 65535 m	0	m	At once
Fb-07	64263	Number of pulses per meter	0.1 to 6553.5	100.0	-	At once
Fb-08	64264	Reference count value	1 to 65535	1000	-	At once
Fb-09	64265	Designated count value	1 to 65535	1000	-	At once
FC-00	64512	Multi-reference 0	–100.0% to +100.0%	0.0	%	At once
FC-01	64513	Multi-reference 1	–100.0% to +100.0%	0.0	%	At once
FC-02	64514	Multi-reference 2	–100.0% to +100.0%	0.0	%	At once
FC-03	64515	Multi-reference 3	–100.0% to +100.0%	0.0	%	At once
FC-04	64516	Multi-reference 4	–100.0% to +100.0%	0.0	%	At once
FC-05	64517	Multi-reference 5	–100.0% to +100.0%	0.0	%	At once
FC-06	64518	Multi-reference 6	–100.0% to +100.0%	0.0	%	At once

Para. No.	Add.	Name	Value Range	Default	Unit	Change
FC-07	64519	Multi-reference 7	–100.0% to +100.0%	0.0	%	At once
FC-08	64520	Multi-reference 8	–100.0% to +100.0%	0.0	%	At once
FC-09	64521	Multi-reference 9	–100.0% to +100.0%	0.0	%	At once
FC-10	64522	Multi-reference 10	–100.0% to +100.0%	0.0	%	At once
FC-11	64523	Multi-reference 11	–100.0% to +100.0%	0.0	%	At once
FC-12	64524	Multi-reference 12	–100.0% to +100.0%	0.0	%	At once
FC-13	64525	Multi-reference 13	–100.0% to +100.0%	0.0	%	At once
FC-14	64526	Multi-reference 14	–100.0% to +100.0%	0.0	%	At once
FC-15	64527	Multi-reference 15	–100.0% to +100.0%	0.0	%	At once
FC-16	64528	Simple PLC running mode	0: Stop after running for one cycle 1: Keep final values after running for one cycle 2: Repeat after running for one cycle	0	-	At once
FC-17	64529	Retentive memory selection of simple PLC	Ones: 0: Non-retentive at power failure 1: Retentive at power failure Tens: 0: Non-retentive at power failure 1: Retentive at power failure	0	-	At once
FC-18	64530	Running time of PLC reference 0	0.0s (h) to 6553.5s (h)	0.0	s (h)	At once
FC-19	64531	Acceleration/ Deceleration time of PLC reference 0	0 to 3	0	-	At once
FC-20	64532	Running time of PLC reference 1	0.0s (h) to 6553.5s (h)	0.0	s (h)	At once
FC-21	64533	Acceleration/ Deceleration time of PLC reference 1	0 to 3	0	-	At once
FC-22	64534	Running time of PLC reference 2	0.0s (h) to 6553.5s (h)	0.0	s (h)	At once
FC-23	64535	Acceleration/ Deceleration time of PLC reference 2	0 to 3	0	-	At once
FC-24	64536	Running time of PLC reference 3	0.0s (h) to 6553.5s (h)	0.0	s (h)	At once
FC-25	64537	Acceleration/ Deceleration time of PLC reference 3	0 to 3	0	-	At once
FC-26	64538	Running time of PLC reference 4	0.0s (h) to 6553.5s (h)	0.0	s (h)	At once
FC-27	64539	Acceleration/ Deceleration time of PLC reference 4	0 to 3	0	-	At once
FC-28	64540	Running time of PLC reference 5	0.0s (h) to 6553.5s (h)	0.0	s (h)	At once

Para. No.	Add.	Name	Value Range	Default	Unit	Change
FC-29	64541	Acceleration/ Deceleration time of PLC reference 5	0 to 3	0	-	At once
FC-30	64542	Running time of PLC reference 6	0.0s (h) to 6553.5s (h)	0.0	s (h)	At once
FC-31	64543	Acceleration/ Deceleration time of PLC reference 6	0 to 3	0	-	At once
FC-32	64544	Running time of PLC reference 7	0.0s (h) to 6553.5s (h)	0.0	s (h)	At once
FC-33	64545	Acceleration/ Deceleration time of PLC reference 7	0 to 3	0	-	At once
FC-34	64546	Running time of PLC reference 8	0.0s (h) to 6553.5s (h)	0.0	s (h)	At once
FC-35	64547	Acceleration/ Deceleration time of PLC reference 8	0 to 3	0	-	At once
FC-36	64548	Running time of PLC reference 9	0.0s (h) to 6553.5s (h)	0.0	s (h)	At once
FC-37	64549	Acceleration/ Deceleration time of PLC reference 9	0 to 3	0	-	At once
FC-38	64550	Running time of PLC reference 10	0.0s (h) to 6553.5s (h)	0.0	s (h)	At once
FC-39	64551	Acceleration/ Deceleration time of PLC reference 10	0 to 3	0	-	At once
FC-40	64552	Running time of PLC reference 11	0.0s (h) to 6553.5s (h)	0.0	s (h)	At once
FC-41	64553	Acceleration/ Deceleration time of PLC reference 11	0 to 3	0	-	At once
FC-42	64554	Running time of PLC reference 12	0.0s (h) to 6553.5s (h)	0.0	s (h)	At once
FC-43	64555	Acceleration/ Deceleration time of PLC reference 12	0 to 3	0	-	At once
FC-44	64556	Running time of PLC reference 13	0.0s (h) to 6553.5s (h)	0.0	s (h)	At once
FC-45	64557	Acceleration/ Deceleration time of PLC reference 13	0 to 3	0	-	At once
FC-46	64558	Running time of PLC reference 14	0.0s (h) to 6553.5s (h)	0.0	s (h)	At once

Para. No.	Add.	Name	Value Range	Default	Unit	Change
FC-47	64559	Acceleration/ Deceleration time of PLC reference 14	0 to 3	0	-	At once
FC-48	64560	Running time of PLC reference 15	0.0s (h) to 6553.5s (h)	0.0	s (h)	At once
FC-49	64561	Acceleration/ Deceleration time of PLC reference 15	0 to 3	0	-	At once
FC-50	64562	PLC running time unit	0: s (second) 1: h (hour)	0	-	At once
FC-51	64563	Multi-reference 0 source	0: Multi-reference 0 (FC-00) 1: AI1 2: AI2 3: AI3 4: Reserved 5: PID 6: Preset frequency (value of F0-08 that can be changed by pressing UP/DOWN)	0	-	At once
Fd-02	64770	Local address	0 to 247	1	-	Unchangeable
Fd-06	64774	Communication fault reset	0 to 1	1	-	At stop
Fd-08	64776	Last allocated station number	0 to 65535	0	-	Unchangeable
Fd-09	64777	CANopen/CANlink communication status	Ones: CANopen 0: Stop 1: Initializing 2: Pre-running 8: Running Tens: CANlink 0: Stop 1: Initializing 2: Pre-running 8: Running	0	-	Unchangeable
Fd-10	64778	Switchover between CANopen and CANlink	1: CANopen 2: CANlink	1	-	Unchangeable
Fd-11	64779	CANopen402	0: Disabled 1: Enabled	0	-	At stop
Fd-13	64781	CAN station number	1 to 127	1	-	At stop
Fd-14	64782	Number of CAN frames received per unit time	0 to 65535	1	-	Unchangeable
Fd-19	64787	CAN communication failure coefficient	1 to 15	1	-	At stop
Fd-92	64860	Communication version	0.00 to 655.35	0.00	-	Unchangeable

Para. No.	Add.	Name	Value Range	Default	Unit	Change
FE-00	65024	User-defined parameter 0	-	0	-	At once
FE-01	65025	User-defined parameter 1	-	0	-	At once
FE-02	65026	User-defined parameter 2	-	0	-	At once
FE-03	65027	User-defined parameter 3	-	0	-	At once
FE-04	65028	User-defined parameter 4	-	0	-	At once
FE-05	65029	User-defined parameter 5	-	0	-	At once
FE-06	65030	User-defined parameter 6	-	0	-	At once
FE-07	65031	User-defined parameter 7	-	0	-	At once
FE-08	65032	User-defined parameter 8	-	0	-	At once
FE-09	65033	User-defined parameter 9	-	0	-	At once
FE-10	65034	User-defined parameter 10	-	0	-	At once
FE-11	65035	User-defined parameter 11	-	0	-	At once
FE-12	65036	User-defined parameter 12	-	0	-	At once
FE-13	65037	User-defined parameter 13	-	0	-	At once
FE-14	65038	User-defined parameter 14	-	0	-	At once
FE-15	65039	User-defined parameter 15	-	0	-	At once
FE-16	65040	User-defined parameter 16	-	0	-	At once
FE-17	65041	User-defined parameter 17	-	0	-	At once
FE-18	65042	User-defined parameter 18	-	0	-	At once
FE-19	65043	User-defined parameter 19	-	0	-	At once
FE-20	65044	User-defined parameter 20	-	0	-	At once
FE-21	65045	User-defined parameter 21	-	0	-	At once

Para. No.	Add.	Name	Value Range	Default	Unit	Change
FE-22	65046	User-defined parameter 22	-	0	-	At once
FE-23	65047	User-defined parameter 23	-	0	-	At once
FE-24	65048	User-defined parameter 24	-	0	-	At once
FE-25	65049	User-defined parameter 25	-	0	-	At once
FE-26	65050	User-defined parameter 26	-	0	-	At once
FE-27	65051	User-defined parameter 27	-	0	-	At once
FE-28	65052	User-defined parameter 28	-	0	-	At once
FE-29	65053	User-defined parameter 29	-	0	-	At once
FE-30	65054	User-defined parameter 30	-	0	-	At once
FE-31	65055	User-defined parameter 31	-	0	-	At once
FP-00	7936	User password	0 to 65535	0	-	Unchangeable
FP-01	7937	Parameter initialization	0: No operation 1: Restore factory defaults 1 2: Clear records 4: Back up current user parameters 501: Restore user backup parameters	1	-	At once
FP-02	7938	Parameter display	Ones: Group U 0: Hide 1: Display Tens: Group A 0: Hide 1: Display Hundreds: Group B 0: Hide 1: Display Thousands: Group C 0: Hide 1: Display	111	-	At once
FP-03	7939	Customized parameter display mode	Ones: 0: Hide 1: Display Tens: 0: Hide 1: Display	0	-	At once

Para. No.	Add.	Name	Value Range	Default	Unit	Change
FP-04	7940	Parameter modification property	0: Changeable 1: Unchangeable	0	-	At once
A0-00	40960	Speed/Torque control mode	0: Speed control 1: Torque control	0	-	At stop
A0-01	40961	Torque reference source	0: Digital setting of drive torque upper limit (A0-03) 1: AI1 2: AI2 3: AI3 4: Reserved 5: Communication setting (1000H) 6: Min. (AI1, AI2) 7: Max. (AI1, AI2)	0	-	At stop
A0-03	40963	Torque digital setting	–2.000% to +2.000%	1.000	%	At once
A0-04	40964	Torque filter time	0.000s to 5.000s	0.000	s	At once
A0-05	40965	Speed limit digital setting	–120.0% to +120.0%	0.0	%	At once
A0-07	40967	Acceleration time (torque)	0.00s to 650.00s	1.00	s	At once
A0-08	40968	Deceleration time (torque)	0.00s to 650.00s	1.00	s	At once
A0-09	40969	Speed limit reference source	0: A0-05 1: Frequency source	0	-	At once
A0-10	40970	Speed limit offset	0.00 to 655.35	5.00	-	At once
A0-11	40971	Effective mode of speed limit offset	0: Bidirectional offset valid 1: Unidirectional offset valid	0	-	At stop
A0-12	40972	Acceleration time (frequency)	0.0s to 6500.0s	1.0	s	At once
A0-13	40973	Deceleration time (frequency)	0.0s to 6500.0s	1.0	s	At once
A0-14	40974	Torque mode switchover	0: No switchover 1: Switched to speed control at stop 2: Target torque at stop being 0	1	-	At stop

Para. No.	Add.	Name	Value Range	Default	Unit	Change
A1-00	41216	VDI1 function	0: No function 1: Forward run (FWD) 2: Reverse run (REV) 3: Three-wire control 4: Forward jog (FJOG) 5: Reverse jog (RJOG) 6: Terminal (UP) 7: Terminal (DOWN) 8: Clear UP and DOWN settings (terminal, operation panel) 9: Fault reset (RESET) 10: NO input of external fault 11: NC input of external fault 12: User-defined fault 1 13: User-defined fault 2 14: Multi-reference terminal 1 15: Multi-reference terminal 2 16: Multi-reference terminal 3 17: Multi-reference terminal 4 18: Terminal 1 for acceleration/ deceleration selection 19: Terminal 2 for acceleration/ deceleration selection 20: Acceleration/Deceleration inhibit 21: Command source switchover terminal 1 22: Command source switchover terminal 2 23: Frequency source switchover 24: Switchover between main frequency source X and preset frequency 25: Switchover between auxiliary frequency source Y and preset frequency 26: Frequency modification 27: Counter input 28: Counter reset	0	-	At stop

Para. No.	Add.	Name	Value Range	Default	Unit	Change
(continued)	41216	VDI1 function	29: Length count input 30: Length reset 31: PID pause 32: PID integral pause 33: PID parameter switchover 34: PID action direction reversal 35: Torque control inhibited 36: Speed control/Torque control switchover 38: Flying start 39: Immediate DC braking 40: Deceleration DC braking 41: External STOP terminal 1 42: External STOP terminal 2 43: Operation pause 44: Coast to stop 45: Emergency stop 46: Motor selection terminal 47: Clear the current running time 48: Two-wire/three-wire control switchover 49: PLC state reset 50: Wobble pause 54 to 63: Reserved	0	-	At stop
A1-01	41217	VDI2 function	Same as A1-00	0	-	At stop
A1-02	41218	VDI3 function	Same as A1-00	0	-	At stop
A1-03	41219	VDI4 function	Same as A1-00	0	-	At stop
A1-04	41220	VDI5 function	Same as A1-00	0	-	At stop
A1-05	41221	VDI active state source	Ones: 0: Parameter setting (A1-06) 1: DO status 2: DI status Tens: 0: Parameter setting (A1-06) 1: DO status 2: DI status Hundred: 0: Parameter setting (A1-06) 1: DO status 2: DI status Thousands: 0: Parameter setting (A1-06) 1: DO status 2: DI status Ten thousands: 0: Parameter setting (A1-06) 1: DO status 2: DI status	0	-	At stop

Para. No.	Add.	Name	Value Range	Default	Unit	Change
A1-06	41222	Selection of VDI active state	Ones: 0: Inactive 1: Active Tens: 0: Inactive 1: Active Hundreds: 0: Inactive 1: Active Thousands: 0: Inactive 1: Active Ten thousands: 0: Inactive 1: Active	0	-	At once
A1-07	41223	Function selection for AI1 used as DI	Same as F4-01	0	-	At stop
A1-08	41224	Function selection for AI2 used as DI	Same as F4-01	0	-	At stop
A1-09	41225	Function selection for AI3 used as DI	Same as F4-01	0	-	At stop
A1-10	41226	Active mode (AI as DI)	Ones: 0: Active high 1: Active low Tens: 0: Active high 1: Active low Hundreds: 0: Active high 1: Active low	0	-	At stop
A5-00	42240	DPWM switchover frequency upper limit	0.00 Hz to 50.00 Hz	12.00	Hz	At once
A5-01	42241	PWM modulation mode	0: Asynchronous modulation 1: Synchronous modulation	0	-	At once
A5-02	42242	Dead-zone compensation mode selection	0: No compensation 1: Compensation	1	-	At stop
A5-03	42243	Random PWM depth	0 to 10	0	-	At once
A5-04	42244	Fast current limit	0: Disabled 1: Enabled	0	-	At once
A5-05	42245	Sampling delay	1 to 13	5	-	At once
A5-06	42246	Undervoltage threshold	150.0 V to 455.0 V	Three-phase 400 V: 350.0 V Single-phase 200 V: 200.0 V	V	At once

Para. No.	Add.	Name	Value Range	Default	Unit	Change
A5-07	42247	SVC optimization selection	0: No optimization 1: Optimization mode 1 2: Optimization mode 2	1	-	At stop
A6-00	42496	Curve 4 minimum input	–10.00 V to +10.00 V	0.00	V	At once
A6-01	42497	Percentage corresponding to curve 4 minimum input	–100.0% to +100.0%	0.0	%	At once
A6-02	42498	Curve 4 inflexion point 1 input	–10.00 V to +10.00 V	3.00	V	At once
A6-03	42499	Percentage corresponding to curve 4 inflexion point 1 input	–100.0% to +100.0%	30.0	%	At once
A6-04	42500	Curve 4 inflexion point 2 input	–10.00 V to +10.00 V	6.00	V	At once
A6-05	42501	Percentage corresponding to curve 4 inflexion point 2 input	–100.0% to +100.0%	60.0	%	At once
A6-06	42502	Curve 4 maximum input	–10.00 V to +10.00 V	10.00	V	At once
A6-07	42503	Percentage corresponding to curve 4 maximum input	–100.0% to +100.0%	100.0	%	At once
A6-08	42504	Curve 5 minimum input	–10.00 V to +10.00 V	-10.00	V	At once
A6-09	42505	Percentage corresponding to curve 5 minimum input	–100.0% to +100.0%	-100.0	%	At once
A6-10	42506	Curve 5 inflexion point 1 input	–10.00 V to +10.00 V	-3.00	V	At once
A6-11	42507	Percentage corresponding to curve 5 inflexion point 1 input	–100.0% to +100.0%	-30.0	%	At once
A6-12	42508	Curve 5 inflexion point 2 input	–10.00 V to +10.00 V	3.00	V	At once
A6-13	42509	Percentage corresponding to curve 5 inflexion point 2 input	–100.0% to +100.0%	30.0	%	At once

Para. No.	Add.	Name	Value Range	Default	Unit	Change
A6-14	42510	Curve 5 maximum input	–10.00 V to +10.00 V	10.00	V	At once
A6-15	42511	Percentage corresponding to curve 5 maximum input	–100.0% to +100.0%	100.0	%	At once
A6-16	42512	AI1 gain	–10.00 to +10.00	1.00	-	At once
A6-17	42513	AI1 offset	–100.0% to +100.0%	0.0	%	At once
A6-18	42514	AI2 gain	–10.00 to +10.00	1.00	-	At once
A6-19	42515	AI2 offset	–100.0% to +100.0%	0.0	%	At once
A6-20	42516	AI3 gain	–10.00 to +10.00	1.00	-	At once
A6-21	42517	AI3 offset	–100.0% to +100.0%	0.0	%	At once
A6-24	42520	Jump point of AI1 setting	–100.0% to +100.0%	0.0	%	At once
A6-25	42521	Jump amplitude of AI1 setting	0.0% to 100.0%	0.5	%	At once
A6-26	42522	Jump point of AI2 setting	–100.0% to +100.0%	0.0	%	At once
A6-27	42523	Jump amplitude of AI2 setting	0.0% to 100.0%	0.5	%	At once
A6-28	42524	Jump point of AI3 setting	–100.0% to +100.0%	0.0	%	At once
A6-29	42525	Jump amplitude of AI3 setting	0.0% to 100.0%	0.5	%	At once
A9-00	43264	Online auto-tuning on the rotor time constant of the asynchronous motor	0: Disabled 1: Enabled	0	-	At once
A9-04	43268	Maximum torque limit coefficient for the asynchronous motor field-weakening range	30 to 150	80	-	At once
A9-05	43269	Speed filter of asynchronous motor in SVC mode	5 ms to 32 ms	15	ms	At once
A9-06	43270	Asynchronous motor speed feedback handling in SVC mode	0: No operation 1: Minimum synchronization frequency limited based on load change 2: Fixed current output during low-speed running 3: Fixed current output during low-speed running	0	-	At once

Para. No.	Add.	Name	Value Range	Default	Unit	Change
A9-07	43271	Magnetic field regulation bandwidth of asynchronous motor in SVC mode	0.0 to 8.0	2.0	-	At once
A9-08	43272	Low-speed running current of asynchronous motor in SVC mode	30 to 170	100	-	At once
A9-09	43273	Switchover frequency of output fixed current of asynchronous motor in SVC mode	2.0 Hz to 100.0 Hz	3.0	Hz	At once
A9-10	43274	Coefficient of speed fluctuation for suppression of asynchronous motor in SVC mode	0 to 6	3	-	At once
A9-11	43275	Acceleration/ Deceleration time of asynchronous motor in SVC mode	0.1s to 3000.0s	20.0	s	At once
A9-12	43276	Quick auto-tuning of stator resistance before asynchronous motor startup	0: Disabled 1: Enabled	0	-	At once
A9-13	43277	Quick auto-tuning of stator resistance coefficient 1 of asynchronous motor	0 to 65535	10	-	At stop
A9-14	43278	Quick auto-tuning of stator resistance coefficient 2 of asynchronous motor	0 to 65535	10	-	At stop
A9-15	43279	Quick auto-tuning of stator resistance coefficient 3 of asynchronous motor	0 to 65535	0	-	At stop
A9-17	43281	Synchronous motor real-time angle	0 to 65535	0	-	Unchangeable
A9-18	43282	Initial angle detection of synchronous motor	0: Detected every run 1: Not detected 2: Detected upon initial power-on	0	-	At once
A9-20	43284	Field weakening mode	0: Automatic mode 1: Synchronous motor adjustment mode 2: Synchronous motor hybrid mode 3: Disabled	1	-	At stop

Para. No.	Add.	Name	Value Range	Default	Unit	Change
A9-21	43285	Field weakening gain of synchronous motor	0 to 50	5	-	At once
A9-22	43286	Output voltage upper limit margin of synchronous motor	0% to 50%	5	%	At once
A9-23	43287	Maximum force adjustment gain of synchronous motor	20% to 300%	100	%	At once
A9-24	43288	Exciting current adjustment gain calculated by synchronous motor	40% to 200%	100	%	At once
A9-25	43289	Estimated synchronous motor speed integral gain in SVC mode	5 to 1000	30	-	At once
A9-26	43290	Estimated synchronous motor speed proportional gain in SVC mode	5 to 300	20	-	At once
A9-27	43291	Estimated synchronous motor speed filter in SVC mode	10 to 2000	100	-	At once
A9-28	43292	Minimum carrier frequency of synchronous motor in SVC mode	8 to 65535	20	-	At once
A9-29	43293	Low speed excitation current of synchronous motor in SVC mode	0% to 80%	30	%	At once
A9-40	43304	Low-speed closed-loop current selection (for VVC)	0: Disabled 1: Enabled	0	-	At stop
A9-41	43305	Low-speed closed-loop current (for VVC)	30 to 200	50	-	At stop
A9-42	43306	Oscillation suppression damping coefficient (for VVC)	0 to 500	100	-	At once
A9-43	43307	Initial position compensation angle (for VVC)	0 to 5	0	-	At stop

Para. No.	Add.	Name	Value Range	Default	Unit	Change
A9-44	0xA92C	Initial position compensation angle of synchronous motor	0 to 360	0	-	Real-time
A9-45	0xA92D	Synchronous motor low-speed handling	0: Disabled 1: Enabled	0	-	At stop
A9-46	0xA92E	Switchover frequency for synchronous motor low-speed handling	0.01 to 5.99	5	-	At stop
A9-47	0xA92F	Synchronous motor low-speed handling current	10 to 200	100	-	At stop
A9-48	0xA930	Synchronous motor low-speed handling feedback suppression coefficient	0 to 300	32	-	At stop
A9-51	0xA933	Advanced settings for asynchronous motor parameter auto-tuning	Ones: Rotor resistance and leakage inductance auto-tuning DC offset selection 0: Standard offset 1: Large offset Tens: New rotor resistance and leakage inductance auto-tuning algorithm 0: Disabled 1: Enabled Hundreds: New mutual inductance static auto-tuning algorithm 0: Disabled 1: Enabled Thousands: Selection of stator resistance identification algorithm 0: Current open loop 1: Current closed loop	111	-	At stop
AF-00	44800	RPDO1-SubIndex0-H	0 to 65535	0	-	At once
AF-01	44801	RPDO1-SubIndex0-L	0 to 65535	0	-	At once
AF-02	44802	RPDO1-SubIndex1-H	0 to 65535	0	-	At once
AF-03	44803	RPDO1-SubIndex1-L	0 to 65535	0	-	At once
AF-04	44804	RPDO1-SubIndex2-H	0 to 65535	0	-	At once
AF-05	44805	RPDO1-SubIndex2-L	0 to 65535	0	-	At once
AF-06	44806	RPDO1-SubIndex3-H	0 to 65535	0	-	At once
AF-07	44807	RPDO1-SubIndex3-L	0 to 65535	0	-	At once
AF-08	44808	RPDO2-SubIndex0-H	0 to 65535	0	-	At once
AF-09	44809	RPDO2-SubIndex0-L	0 to 65535	0	-	At once
AF-10	44810	RPDO2-SubIndex1-H	0 to 65535	0	-	At once
AF-11	44811	RPDO2-SubIndex1-L	0 to 65535	0	-	At once
AF-12	44812	RPDO2-SubIndex2-H	0 to 65535	0	-	At once

Para. No.	Add.	Name	Value Range	Default	Unit	Change
AF-13	44813	RPDO2-SubIndex2-L	0 to 65535	0	-	At once
AF-14	44814	RPDO2-SubIndex3-H	0 to 65535	0	-	At once
AF-15	44815	RPDO2-SubIndex3-L	0 to 65535	0	-	At once
AF-16	44816	RPDO3-SubIndex0-H	0 to 65535	0	-	At once
AF-17	44817	RPDO3-SubIndex0-L	0 to 65535	0	-	At once
AF-18	44818	RPDO3-SubIndex1-H	0 to 65535	0	-	At once
AF-19	44819	RPDO3-SubIndex1-L	0 to 65535	0	-	At once
AF-20	44820	RPDO3-SubIndex2-H	0 to 65535	0	-	At once
AF-21	44821	RPDO3-SubIndex2-L	0 to 65535	0	-	At once
AF-22	44822	RPDO3-SubIndex3-H	0 to 65535	0	-	At once
AF-23	44823	RPDO3-SubIndex3-L	0 to 65535	0	-	At once
AF-24	44824	RPDO4-SubIndex0-H	0 to 65535	0	-	At once
AF-25	44825	RPDO4-SubIndex0-L	0 to 65535	0	-	At once
AF-26	44826	RPDO4-SubIndex1-H	0 to 65535	0	-	At once
AF-27	44827	RPDO4-SubIndex1-L	0 to 65535	0	-	At once
AF-28	44828	RPDO4-SubIndex2-H	0 to 65535	0	-	At once
AF-29	44829	RPDO4-SubIndex2-L	0 to 65535	0	-	At once
AF-30	44830	RPDO4-SubIndex3-H	0 to 65535	0	-	At once
AF-31	44831	RPDO4-SubIndex3-L	0 to 65535	0	-	At once
AF-32	44832	TPDO1-SubIndexO-H	0 to 65535	0	-	At once
AF-33	44833	TPDO1-SubIndexO-L	0 to 65535	0	-	At once
AF-34	44834	TPDO1-SubIndex1-H	0 to 65535	0	-	At once
AF-35	44835	TPDO1-SubIndex1-L	0 to 65535	0	-	At once
AF-36	44836	TPDO1-SubIndex2-H	0 to 65535	0	-	At once
AF-37	44837	TPDO1-SubIndex2-L	0 to 65535	0	-	At once
AF-38	44838	TPDO1-SubIndex3-H	0 to 65535	0	-	At once
AF-39	44839	TPDO1-SubIndex3-L	0 to 65535	0	-	At once
AF-40	44840	TPDO2-SubIndex0-H	0 to 65535	0	-	At once
AF-41	44841	TPDO2-SubIndex0-L	0 to 65535	0	-	At once
AF-42	44842	TPDO2-SubIndex1-H	0 to 65535	0	-	At once
AF-43	44843	TPDO2-SubIndex1-L	0 to 65535	0	-	At once
AF-44	44844	TPDO2-SubIndex2-H	0 to 65535	0	-	At once
AF-45	44845	TPDO2-SubIndex2-L	0 to 65535	0	-	At once
AF-46	44846	TPDO2-SubIndex3-H	0 to 65535	0	-	At once
AF-47	44847	TPDO2-SubIndex3-L	0 to 65535	0	-	At once
AF-48	44848	TPDO3-SubIndex0-H	0 to 65535	0	-	At once
AF-49	44849	TPDO3-SubIndex0-L	0 to 65535	0	-	At once
AF-50	44850	TPDO3-SubIndex1-H	0 to 65535	0	-	At once
AF-51	44851	TPDO3-SubIndex1-L	0 to 65535	0	-	At once
AF-52	44852	TPDO3-SubIndex2-H	0 to 65535	0	-	At once
AF-53	44853	TPDO3-SubIndex2-L	0 to 65535	0	-	At once
AF-54	44854	TPDO3-SubIndex3-H	0 to 65535	0	-	At once
AF-55	44855	TPDO3-SubIndex3-L	0 to 65535	0	-	At once
AF-56	44856	TPDO4-SubIndex0-H	0 to 65535	0	-	At once
AF-57	44857	TPDO4-SubIndex0-L	0 to 65535	0	-	At once

Para. No.	Add.	Name	Value Range	Default	Unit	Change
AF-58	44858	TPDO4-SubIndex1-H	0 to 65535	0	-	At once
AF-59	44859	TPDO4-SubIndex1-L	0 to 65535	0	-	At once
AF-60	44860	TPDO4-SubIndex2-H	0 to 65535	0	-	At once
AF-61	44861	TPDO4-SubIndex2-L	0 to 65535	0	-	At once
AF-62	44862	TPDO4-SubIndex3-H	0 to 65535	0	-	At once
AF-63	44863	TPDO4-SubIndex3-L	0 to 65535	0	-	At once
AF-66	44866	Number of valid RPDOs	0 to 65535	0	-	Unchangeable
AF-67	44867	Number of valid TPDOs	0 to 65535	0	-	Unchangeable
U0-00	28672	Running frequency	0.00 Hz to target frequency	Model dependent	Hz	Unchangeable
U0-01	28673	Frequency reference	0.00 Hz to target frequency	Model dependent	Hz	Unchangeable
U0-02	28674	Bus voltage	0.0 V to 3000.0 V	Model dependent	V	Unchangeable
U0-03	28675	Output voltage	0 V to 1140 V	Model dependent	V	Unchangeable
U0-04	28676	Output current	0.00 A to 655.35 A	Model dependent	A	Unchangeable
U0-05	28677	Output power	0.0 kW to 3276.7 kW	Model dependent	kW	Unchangeable
U0-06	28678	Output torque	–200.0% to +200.0%	Model dependent	%	Unchangeable
U0-07	28679	DI status	-	Model dependent	-	Unchangeable
U0-08	28680	DO/RO status	-	Model dependent	-	Unchangeable
U0-09	28681	AI1 voltage	–10.00 V to +10.00 V	Model dependent	V	Unchangeable
U0-10	28682	AI2 voltage	–10.00 V to +10.00 V	Model dependent	V	Unchangeable
U0-11	28683	AI3 voltage	–10.00 V to +10.00 V	Model dependent	V	Unchangeable
U0-12	28684	Count value	1 to 65535	Model dependent	-	Unchangeable
U0-13	28685	Length value	1 to 65535	Model dependent	-	Unchangeable
U0-14	28686	Load speed display	0 to rated motor speed	Model dependent	-	Unchangeable
U0-15	28687	PID reference	0 to 65535	Model dependent	-	Unchangeable
U0-16	28688	PID feedback	0 to 65535	Model dependent	-	Unchangeable

Para. No.	Add.	Name	Value Range	Default	Unit	Change
U0-17	28689	PLC stage	0 to 15	Model dependent	-	Unchangeable
U0-19	28691	Feedback speed	0.00 Hz to maximum frequency	Model dependent	Hz	Unchangeable
U0-20	28692	Remaining running time	0.0 min to 6500.0 min	Model dependent	min	Unchangeable
U0-21	28693	AI1 voltage after gain and offset	–10.00 V to +10.00 V	Model dependent	V	Unchangeable
U0-22	28694	AI2 voltage after gain and offset	–10.00 V to +10.00 V	Model dependent	V	Unchangeable
U0-23	28695	AI3 voltage after gain and offset	–10.00 V to +10.00 V	Model dependent	V	Unchangeable
U0-24	28696	Linear speed	0 m/min to 65535 m/min	Model dependent	m/min	Unchangeable
U0-25	28697	Current power-on duration	0 min to 65000 min	Model dependent	min	Unchangeable
U0-26	28698	Current running time	0.0 min to 6500.0 min	Model dependent	min	Unchangeable
U0-28	28700	Communication	–100.00% to +100.00%	Model dependent	%	Unchangeable
U0-30	28702	Main frequency X display	0.00 Hz to 500.00 Hz	Model dependent	Hz	Unchangeable
U0-31	28703	Auxiliary frequency Y display	0.00 Hz to 500.00 Hz	Model dependent	Hz	Unchangeable
U0-33	28705	Synchronous motor rotor position	0.0° to 359.9°	Model dependent	°	Unchangeable
U0-35	28707	Target torque (%)	–200.0% to +200.0%	Model dependent	%	Unchangeable
U0-37	28709	Power factor angle	0.0° to 6553.5°	Model dependent	°	Unchangeable
U0-39	28711	Target voltage upon V/f separation	0 V to target voltage	Model dependent	V	Unchangeable
U0-40	28712	Output voltage upon V/f separation	0 V to output voltage	Model dependent	V	Unchangeable
U0-41	28713	DI status display	0 to 65535	Model dependent	-	Unchangeable
U0-42	28714	DO/RO status display	0 to 65535	Model dependent	-	Unchangeable
U0-43	28715	DI function status display 1	0 to 65535	Model dependent	-	Unchangeable
U0-44	28716	DI function status display 2	0 to 65535	Model dependent	-	Unchangeable
U0-45	28717	Fault code	0 to 51	Model dependent	-	Unchangeable

Para. No.	Add.	Name	Value Range	Default	Unit	Change
U0-46	28718	Fault subcode	0 to 51	Model dependent	-	Unchangeable
U0-47	28719	Drive unit temperature	–20°C to +120°C	Model dependent	°C	Unchangeable
U0-48	28720	Voltage received through PTC channel 1	-	Model dependent	V	Unchangeable
U0-49	28721	Voltage received through PTC channel 2	-	Model dependent	V	Unchangeable
U0-50	28722	Voltage received through PTC channel 3	-	Model dependent	V	Unchangeable
U0-51	28723	PTC1 temperature	-	Model dependent	°C	Unchangeable
U0-52	28724	PTC2 temperature	-	Model dependent	°C	Unchangeable
U0-53	28725	PTC3 temperature	-	Model dependent	°C	Unchangeable
U0-54	28726	Motor speed	-	Model dependent	RPM	Unchangeable
U0-55	28727	Station number auto allocated	-	Model dependent	-	Unchangeable
U0-56	28728	Identified axis type	1 to 3	Model dependent	-	Unchangeable
U0-61	28733	AC drive operation status word 1	-	Model dependent	-	Unchangeable
U0-64	28736	Special protocol status word	-	Model dependent	-	Unchangeable
U0-68	28740	AC drive operation status word 2	-	Model dependent	-	Unchangeable
U0-78	28750	AC drive rated current	0.0 A to AC drive rated current	Model dependent	A	Unchangeable
U0-79	28751	AC drive power	0.0 V to AC drive rated voltage	Model dependent	kW	Unchangeable
U0-81	28753	Local LED status	-	Model dependent	-	Unchangeable
U0-88	28760	Alarm code	-	Model dependent	-	Unchangeable
U0-89	28761	Alarm subcode	-	Model dependent	-	Unchangeable
U0-90	28762	Fan speed percentage reference	-	Model dependent	-	Unchangeable
U0-91	28763	PTC1 mode	-	Model dependent	-	Unchangeable

Para. No.	Add.	Name	Value Range	Default	Unit	Change
U0-92	28764	PTC2 mode	-	Model dependent	-	Unchangeable
U0-93	28765	PTC3 mode	-	Model dependent	-	Unchangeable
U0-95	28767	STO initialization flag	-	Model dependent	-	Unchangeable
U0-96	28768	STO status word monitoring	-	Model dependent	-	Unchangeable
U0-97	28769	STO model	-	Model dependent	-	Unchangeable
U0-98	28770	STO AD sampling value	-	Model dependent	-	Unchangeable
U0-99	28771	STO internal execution flag	-	Model dependent	-	Unchangeable
U3-16	29456	Communication frequency	0 to 65535	0	-	Unchangeable
U3-17	29457	Communication control command	0: Stop according to F6-10 1: Forward running 2: Reverse running 3: Forward jog 4: Reverse jog 5: Coast to stop 6: Decelerate to stop 7: Fault reset	0	-	Unchangeable
U3-18	29458	Communication control DO/RO	Bit0: DO1/RO1 Bit1: DO2/RO2 Bit2: DO3/RO3 Bit3: DO4/RO4 Bit4: DO5/RO5	0	-	Unchangeable
U4-00	29696	Fault code	0 to 65535	0	-	Unchangeable
U4-01	29697	Control word	0 to 65535	0	-	Unchangeable
U4-02	29698	Status word	0 to 65535	0	-	Unchangeable
U4-03	29699	Target speed	0 RPM to 65535 RPM	0	RPM	Unchangeable
U4-04	29700	Preset speed	0 RPM to 65535 RPM	0	RPM	Unchangeable
U4-05	29701	Output speed	0 RPM to 65535 RPM	0	RPM	Unchangeable
U4-14	29710	Fast stop mode	0 to 65535	0	-	Unchangeable
U4-16	29712	Disabling stop mode	0 to 65535	0	-	Unchangeable
U4-19	29715	Mode selection	0 to 65535	0	-	Unchangeable
U4-20	29716	Mode display	0 to 65535	0	-	Unchangeable
U4-22	29718	Output torque	0.0% to 6553.5%	0.0	%	Unchangeable
U5-00	29952	Power supply unit DI - hardware resource	0 to 65535	0	-	Unchangeable

Para. No.	Add.	Name	Value Range	Default	Unit	Change
U5-01	29953	Power supply unit DO/RO - hardware resource	0 to 65535	0	-	Unchangeable
U5-02	29954	Power supply unit AI - hardware resource	0 to 65535	0	-	Unchangeable
U5-04	29956	Extension card 1 - DI hardware resource	0 to 65535	0	-	Unchangeable
U5-05	29957	Extension card 1 - DO/RO hardware resource	0 to 65535	0	-	Unchangeable
U5-06	29958	Extension card 1 - AI hardware resource	0 to 65535	0	-	Unchangeable
U5-08	29960	Extension card 2 - DI hardware resource	0 to 65535	0	-	Unchangeable
U5-09	29961	Extension card 2 - DO/RO hardware resource	0 to 65535	0	-	Unchangeable
U5-10	29962	Extension card 2 - AI hardware resource	0 to 65535	0	-	Unchangeable
U5-12	29964	Extension card 3 - DI hardware resource	0 to 65535	0	-	Unchangeable
U5-13	29965	Extension card 3 - DO/RO hardware resource	0 to 65535	0	-	Unchangeable
U5-14	29966	Extension card 3 - AI hardware resource	0 to 65535	0	-	Unchangeable
U5-20	29972	Power supply unit DI - mapping	0 to 65535	0	-	Unchangeable
U5-21	29973	Power supply unit DO/RO - mapping	0 to 65535	0	-	Unchangeable
U5-22	29974	Power supply unit AI - mapping	0 to 65535	0	-	Unchangeable
U5-24	29976	Extension card 1 - DI mapping	0 to 65535	0	-	Unchangeable
U5-25	29977	Extension card 1 - DO/RO mapping	0 to 65535	0	-	Unchangeable
U5-26	29978	Extension card 1 - AI mapping	0 to 65535	0	-	Unchangeable
U5-28	29980	Extension card 2 - DI mapping	0 to 65535	0	-	Unchangeable
U5-29	29981	Extension card 2 - DO/RO mapping	0 to 65535	0	-	Unchangeable
U5-30	29982	Extension card 2 - AI mapping	0 to 65535	0	-	Unchangeable

Para. No.	Add.	Name	Value Range	Default	Unit	Change
U5-32	29984	Extension card 3 - DI mapping	0 to 65535	0	-	Unchangeable
U5-33	29985	Extension card 3 - DO/RO mapping	0 to 65535	0	-	Unchangeable
U5-34	29986	Extension card 3 - AI mapping	0 to 65535	0	-	Unchangeable
U5-40	29992	Power supply unit - DI data	0 to 65535	0	-	Unchangeable
U5-41	29993	Extension card 1 - DI data	0 to 65535	0	-	Unchangeable
U5-42	29994	Extension card 2 - DI data	0 to 65535	0	-	Unchangeable
U5-43	29995	Extension card 3 - DI data	0 to 65535	0	-	Unchangeable
U5-45	29997	DO/RO data of IGBT module	0 to 65535	0	-	Unchangeable
U5-50	30002	Power supply unit - AI1 function	0 to 65535	0	-	Unchangeable
U5-51	30003	Power supply unit - AI2 function	0 to 65535	0	-	Unchangeable
U5-52	30004	Extension card 1 - AI1 function	0 to 65535	0	-	Unchangeable
U5-53	30005	Extension card 1 - AI2 function	0 to 65535	0	-	Unchangeable
U5-54	30006	Extension card 2 - AI1 function	0 to 65535	0	-	Unchangeable
U5-55	30007	Extension card 2 - AI2 function	0 to 65535	0	-	Unchangeable
U5-56	30008	Extension card 3 - AI1 function	0 to 65535	0	-	Unchangeable
U5-57	30009	Extension card 3 - AI2 function	0 to 65535	0	-	Unchangeable
U5-60	30012	Power supply unit - AI1 voltage	0 to 65535	0	-	Unchangeable
U5-61	30013	Power supply unit - AI2 voltage	0 to 65535	0	-	Unchangeable
U5-62	30014	Extension card 1 - AI1 voltage	0 to 65535	0	-	Unchangeable
U5-63	30015	Extension card 1 - AI2 voltage	0 to 65535	0	-	Unchangeable
U5-64	30016	Extension card 2 - AI1 voltage	0 to 65535	0	-	Unchangeable
U5-65	30017	Extension card 2 - AI2 voltage	0 to 65535	0	-	Unchangeable

Para. No.	Add.	Name	Value Range	Default	Unit	Change
U5-66	30018	Extension card 3 - AI1 voltage	0 to 65535	0	-	Unchangeable
U5-67	30019	Extension card 3 - AI2 voltage	0 to 65535	0	-	Unchangeable

4.6 List of Fault Codes

The following faults may occur during the use of the AC drive. Troubleshoot the faults according to the solutions described in the following table.

Table 4–3 Fault codes

Fault Name	Panel Display	Possible Cause	Solution	Fault Type
STO product model identification error	E01.06	The hardware is faulty.	Check the AC drive nameplate to confirm whether the AC drive has the STO function. If not, contact the technical support personnel.	Axis fault
AC drive axis type identification setting error	E01.07	The hardware is faulty.	Check the AC drive nameplate to confirm the axis type (single-axis or dual-axis) of the AC drive.	Axis fault

Fault Name	Panel Display	Possible Cause	Solution	Fault Type
Overcurrent during acceleration	E02.04	1. A grounding fault or short circuit exists in the output circuit of the AC drive. 2. The SVC control mode is adopted, and motor auto-tuning is not performed. 3. The set acceleration time is too short. 4. The overcurrent stall suppression setting is improper. 5. The customized torque boost or V/f curve is improper. 6. The motor is started while rotating. 7. The AC drive suffers external interference.	1. Check the motor and the relay contactor and make sure that they are not short-circuited. 2. Set the motor parameters according to the motor nameplate and perform motor auto-tuning. 3. Increase the acceleration time (F0-17). 4. Ensure that overcurrent stall suppression (F3-19) is enabled.The overcurrent stall action current (F3-18) is too high. Adjust it to a value between 120% and 160%.The overcurrent stall suppression gain (F3-20) is too low. Adjust it to a value between 20 and 40. 5. Adjust the customized torque boost or V/f curve. 6. Enable the flying start function or start the AC drive after the motor stops. 7. Check whether the fault current reaches the overcurrent stall suppression current (F3-18) by viewing the fault log. If not, the fault is possibly caused by external interference. In this case, find out the external interference source and rectify the fault.If no external interference source is found, the drive board or Hall device may be faulty. In this case, contact the manufacturer for replacement.	Axis fault
	E02.05			Axis fault
	E02.06			Axis fault

Fault Name	Panel Display	Possible Cause	Solution	Fault Type
Overcurrent during deceleration	E03.04	1. A grounding fault or short circuit exists in the output circuit of the AC drive. 2. The SVC control mode is adopted, and motor auto-tuning is not performed. 3. The set deceleration time is too short. 4. The overcurrent stall suppression setting is improper. 5. The power supply unit is not provided with a braking unit and no braking resistor is installed. 6. The AC drive suffers external interference.	1. Check the motor and make sure that the motor is not short-circuited or open-circuited. 2. Set the motor parameters according to the motor nameplate and perform motor auto-tuning. 3. Increase the deceleration time (F0-18). 4. Ensure that overcurrent stall suppression (F3-19) is enabled.The overcurrent stall action current (F3-18) is too high. Adjust it to a value between 120% and 150%.The overcurrent stall suppression gain (F3-20) is too low. Adjust it to a value between 20 and 40. 5. Replace the power supply unit with one that has a braking unit and install a braking resistor. 6. Check whether the fault current reaches the overcurrent stall suppression current (F3-18) by viewing the fault log. If not, the fault is possibly caused by external interference. In this case, find out the external interference source and rectify the fault.If no external interference source is found, the drive board or Hall device may be faulty. In this case, contact the manufacturer for replacement.	Axis fault
	E03.05			Axis fault
	E03.06			Axis fault

Fault Name	Panel Display	Possible Cause	Solution	Fault Type
Overcurrent at constant speed	E04.04	1. A grounding fault or short circuit exists in the output circuit of the AC drive. 2. The SVC control mode is adopted, and motor auto-tuning is not performed. 3. The overcurrent stall suppression setting is improper. 4. The AC drive power rating is too low. 5. The AC drive suffers external interference.	1. Check the motor and make sure that the motor is not short-circuited or open-circuited. 2. Set the motor parameters according to the motor nameplate and perform motor auto-tuning. 3. Ensure that overcurrent stall suppression (F3-19) is enabled.The overcurrent stall action current (F3-18) is too high. Adjust it to a value between 120% and 150%.The overcurrent stall suppression gain (F3-20) is too low. Adjust it to a value between 20 and 40. 4. During stable running, if the running current exceeds the rated motor current or rated output current of the AC drive, replace the AC drive with one of higher power rating. 5. Check whether the fault current reaches the overcurrent stall suppression current (F3-18) by viewing the fault log. If not, the fault is possibly caused by external interference. In this case, find out the external interference source and rectify the fault.If no external interference source is found, the drive board or Hall device may be faulty. In this case, contact the manufacturer for replacement.	Axis fault
	E04.05			Axis fault
	E04.06			Axis fault

Fault Name	Panel Display	Possible Cause	Solution	Fault Type
Overvoltage during acceleration	E05.00	The input grid voltage is too high.	Adjust the input grid voltage to the normal range.	Axis fault
		An external force drives the motor during acceleration.	Cancel the external force or install a braking resistor. The maximum rise frequency during overvoltage stall suppression (F3-26) is too low. Adjust it to a value between 5 Hz and 15 Hz when an external force is applied.	
		The overvoltage stall suppression parameters are set improperly.	Ensure that the overvoltage stall suppression function (F3-23) is enabled. The overvoltage stall suppression voltage (F3-22) is too high. Adjust it to a value between 700 V and 770 V. The overvoltage stall suppression frequency gain (F3-24) is too low. Adjust it to a value between 30 and 50.	
		The power supply unit is not provided with a braking unit and no braking resistor is installed.	Replace the power supply unit with one that has a braking unit and install a braking resistor.	
		The acceleration time is too short.	Increase the acceleration time (F0-17).	
Overvoltage during deceleration	E06.00	The overvoltage stall suppression parameters are set improperly.	Ensure that the overvoltage stall suppression function (F3-23) is enabled. The overvoltage stall suppression voltage (F3-22) is too high. Adjust it to a value between 700 V and 770 V. The overvoltage stall suppression frequency gain (F3-24) is too low. Adjust it to a value between 30 and 50.	Axis fault
		An external force drives the motor during deceleration.	Cancel the external force or install a braking resistor. The maximum rise frequency during overvoltage stall suppression (F3-26) is too low. Adjust it to a value between 5 Hz and 15 Hz when an external force is applied.	
		The deceleration time is too short.	Increase the deceleration time (F0-18).	
		The power supply unit is not provided with a braking unit and no braking resistor is installed.	Replace the power supply unit with one that has a braking unit and install a braking resistor.	

Fault Name	Panel Display	Possible Cause	Solution	Fault Type
Overvoltage at constant speed	E07.00	The overvoltage stall suppression parameters are set improperly.	Ensure that the overvoltage stall suppression function (F3-23) is enabled. The overvoltage stall suppression voltage (F3-22) is too high. Adjust it to a value between 700 V and 770 V. The overvoltage stall suppression frequency gain (F3-24) is too low. Adjust it to a value between 30 and 50.	Axis fault
		An external force drives the motor during running.	Cancel the external force or install a braking resistor. The maximum rise frequency during overvoltage stall suppression (F3-26) is too low. Adjust it to a value between 5 Hz and 15 Hz when an external force is applied.	
	E07.01	The bus voltage of the single-phase AC drive is too high.	Check whether the bus voltage of the single-phase AC drive exceeds 410.0 V.	Axis fault
Undervoltage	E09.00	An instantaneous power failure occurs.	Enable the power dip ride-through function (F9-63).	Axis fault
		The input voltage of the AC drive is beyond the specified range.	Adjust the input voltage of the AC drive to the normal range.	
		The bus voltage is abnormal.	Contact the technical support personnel.	
		The power supply unit, the drive board of the drive unit, or the control board of the drive unit is abnormal.	Contact the technical support personnel.	
AC drive overload	E10.00	The load is too heavy or motor stalling occurs.	Reduce the load and check the motor and mechanical conditions.	Axis fault
		The AC drive power rating is too low.	Replace the AC drive with one of higher power rating.	
		The SVC control mode is adopted, and motor auto-tuning is not performed.	Set the motor parameters according to the motor nameplate and perform motor auto-tuning.	
		The control mode is V/f control.	Reduce the torque boost (F3-01) reference in decrements of 1.0%, or set it to 0 (auto torque boost).	
Motor overload	E11.00	F9-01 (motor overload protection gain) is set improperly.	Set F9-01 correctly. Increase its value to prolong the motor overload time.	Axis fault
		The load is too heavy or motor stalling occurs.	Reduce the load and check the motor and mechanical conditions.	

Fault Name	Panel Display	Possible Cause	Solution	Fault Type
Input voltage exception	E12.01	Input voltage phase loss	Check the three-phase power supply and make sure that it is normal. Check the input cables and make sure that they are not broken. Check the input terminals and make sure that they are properly connected.	Power supply unit fault
	E12.04	The input three-phase voltage is too high.	Ensure that the input voltage does not exceed the rated value: Three-phase 380 V models: 576 V Single-phase 220 V models: 288 V	Power supply unit fault
Output phase loss	E13.00	The motor is faulty.	Check the motor for open circuit.	Axis fault
		The cable connecting the AC drive and the motor is abnormal.	Check the cable between the AC drive and the motor.	
		The three-phase outputs of the AC drive are unbalanced when the motor is running.	Check whether the motor three-phase winding is normal. If not, eliminate the fault.	
		The drive board or the IGBT is abnormal.	Contact the technical support personnel.	
IGBT overheat	E14.00	The ambient temperature is too high.	Lower the ambient temperature.	Power supply unit fault
		The air filter is blocked.	Clean the air filter.	
		The fan is damaged.	Replace the fan.	
		The thermistor of the IGBT is damaged.	Contact the technical support personnel.	
		The IGBT is damaged.	Contact the technical support personnel.	
External device fault	E15.01	An external fault signal is input through multi-functional DI (NO).	Eliminate the external fault, ensure that the mechanical condition allows restart (F8-21), and reset the operation.	Axis fault
	E15.02	An external fault signal is input through the multi-functional DI (NC).	Eliminate the external fault, ensure that the mechanical condition allows restart (F8-21), and reset the operation.	Axis fault

Fault Name	Panel Display	Possible Cause	Solution	Fault Type
Communication fault	E16.01	Modbus communication timeout	Check whether the Modbus master sends data within the set timeout period. Check whether the RS485 circuit is disconnected or suffers interference.	Axis fault
	A16.02	The protective cover for the connector is not installed.	Install the protective cover on the connector of the rightmost drive unit.	Axis fault
	E16.03	Station number allocation fails.	Power on all equipment. If the fault persists, replace the AC drive.	Axis fault
	E16.04	Continuous frame loss occurs on the extension card.	Ensure that the extension card is connected properly. Check whether F9-67 is set too low.	Axis fault
	E16.11	CANopen communication timeout	EtherCAT is disconnected. Make sure that the CAN communication cable is connected properly. Check parameters Fd-15 to Fd-17 to eliminate possible interference.	Axis fault
	E16.12	The PDO mapping configured by CANopen is inconsistent with the actual communication mapping.	The EtherCAT mapping is inconsistent with the PDO mapping. Check the PDO mapping parameters in group AF to make sure that the PDO configuration is correct.	Axis fault
	E16.13	Data exchange from the power supply unit to the drive unit times out.	Check whether the power supply unit works properly. If the power supply unit is faulty, contact the technical support personnel.	Axis fault
	E16.14	Data exchange from the power supply unit to the drive unit is abnormal.	The power supply unit is faulty. Contact the technical support personnel.	Axis fault
	E16.21	CANlink heartbeat times out.	Check that the CAN communication cable is correctly connected. Check parameters Fd-15 to Fd-17 to eliminate possible interference.	Axis fault
	E16.22	A CANlink station number conflict occurs.	Change duplicate CAN station numbers in the network to different ones by using Fd-13.	Axis fault
	E16.52	The EEPROM of the EtherCAT communication card is faulty.	1. If the programming or upgrading of the communication card fails, program the communication card again. 2. If this fault occurs during normal use, replace the communication card.	Axis fault
	E16.53	The slave control chip of the EtherCAT communication card is faulty.	1. If the programming or upgrading of the communication card fails, program the communication card again. 2. If this fault occurs during normal use, replace the communication card.	Axis fault
	E16.55	The EtherCAT system parameters are incorrect.	When the master station goes wrong, check whether it sends the sync frame (FD-78). If not, make sure that TPDO and RPDO have been configured for the master PDO. If the	Axis fault

Fault Name	Panel Display	Possible Cause	Solution	Fault Type
Motor auto-tuning fault	E19.02 E19.04	Auto-tuning on the synchronous motor magnetic pole position angle fails.	Check whether the motor is disconnected or output phase loss occurs.	Axis fault
	E19.05	Auto-tuning on the synchronous motor magnetic pole initial position angle fails.	Increase the synchronous motor initial position angle detection current (F2-29).	Axis fault
	E19.06 E19.07 E19.08	Auto-tuning on the stator resistance fails.	Ensure that the motor is connected properly. Ensure that the rated motor current (F1-03) is set according to the motor nameplate.	Axis fault
	E19.09 E19.10	Auto-tuning on the asynchronous motor transient leakage inductance fails.	The motor is not connected or output phase loss occurs. Ensure that the motor is connected properly or the motor is disconnected from the load.	Axis fault
	E19.12	The auto-tuning times out.	The motor is not connected or output phase loss occurs. Ensure that the motor is connected properly or the motor is disconnected from the load.	Axis fault
	E19.13			Axis fault
	E19.14			Axis fault
	E19.15			Axis fault
	E19.16			Axis fault
	E19.17			Axis fault
	E19.19			Axis fault
	E19.20	Auto-tuning on the zero position angle of the no-load synchronous motor times out.	Check the Z feedback signal.	Axis fault
	E19.22			Axis fault
	E19.23	Auto-tuning on the synchronous motor pole position fails.	Ensure that the rated motor current (F1-03) is set according to the motor nameplate. Decrease the synchronous motor initial position angle detection current (F2-29).	Axis fault
	E19.24	Auto-tuning on the asynchronous motor transient leakage inductance fails.	The AC drive power rating is too low. Select an AC drive of proper power rating according to the motor power.	Axis fault
EEPROM read-write fault	E21.01	EEPROM read-write is abnormal.	For parameters written to EEPROM through communication, check the RAM addresses of the parameters. For the RAM address mapping of parameters, see "Parameter Address Rules". If the EEPROM chip is damaged, contact the manufacturer to replace the main control board.	Axis fault
	E21.02			Axis fault
	E21.03			Axis fault
	E21.04			Axis fault

Fault Name	Panel Display	Possible Cause	Solution	Fault Type
Motor auto-tuning error	E22.00	The stator resistance obtained through auto-tuning exceeds the allowed range.	Check whether the rated motor voltage and current are correctly set, and set F1-02 (rated motor voltage) and F1-03 (rated motor current) according to the motor nameplate. Perform auto-tuning after the motor stops.	Axis fault
	E22.01	The rotor resistance of the asynchronous motor obtained through auto-tuning exceeds the allowed range.		Axis fault
	E22.02	The no-load current and mutual inductance of the asynchronous motor obtained through auto-tuning exceed the allowed range. If such an alarm is generated, the AC drive calculates no-load current and mutual inductance based on known parameters, which may be different from the optimal values.	Set motor parameters in group F1 according to the motor nameplate. Before auto-tuning, ensure that the motor has no load.	Axis fault
	E22.03	The back EMF of the synchronous motor obtained through auto-tuning exceeds the allowed range.	Ensure that the rated motor voltage (F1-02) is set according to the motor nameplate. Before auto-tuning, ensure that the motor has no load.	Axis fault

Fault Name	Panel Display	Possible Cause	Solution	Fault Type
Short circuit to ground	E23.00	The motor is short circuited to the ground.	Check the motor cables and motor for short circuit to ground.	Axis fault
	E23.01	A hardware overcurrent fault occurs during short-to-ground detection upon power-on.		
	E23.02	A hardware overvoltage fault occurs during short-to-ground detection upon power-on.		
	E23.03	A great risk is detected during short-to-ground detection upon power-on.		
	E23.04	A lower bridge overcurrent fault occurs during short-to-ground detection before startup.		
	E23.05	A bus overcurrent fault occurs during short-to-ground detection before startup.		
	E23.06	A lower bridge and bus overcurrent fault occurs during short-to-ground detection before startup.		
Power supply unit fault	E25.00	The power supply unit is faulty.	Eliminate the power supply unit faults, such as input phase loss and overtemperature. Check the terminal configuration of the power supply unit. If any one of the following functions is selected, a fault is reported when there is no feedback signal: 1: Operation enable 2: Incoming circuit breaker feedback 3: Auxiliary circuit breaker feedback 4: Residual current device feedback If any one of the following functions is selected, a fault is reported when the terminal is active: 6: Drive unit running prohibited 7: Drive unit coast-to-stop 8: Drive unit stop according to the preset mode	Axis fault

Fault Name	Panel Display	Possible Cause	Solution	Fault Type
Accumulative running time reach	E26.00	The accumulative running time reaches the reference.	Clear the record through parameter initialization.	Axis fault
User-defined fault 1	E27.00	The signal of user-defined fault 1 is input through the multi-functional DI terminal. The signal of user-defined fault 1 is input through virtual I/O.	Reset.	Axis fault
User-defined fault 2	E28.00	The signal of user-defined fault 2 is input through the multi-functional DI terminal. The signal of user-defined fault 2 is input through virtual I/O.	Reset.	Axis fault
Accumulative power-on time reach	E29.00	The accumulative power-on time reaches the reference.	Clear the record through parameter initialization.	Axis fault
Load loss	E30.00	The running current of the AC drive is lower than that set by F9-68.	Check whether the load is disconnected or the setting of F9-68 and F9-69 satisfies actual running conditions.	Axis fault
PID feedback loss during running	E31.00	The PID feedback is lower than that set by FA-26.	Check the PID feedback signal or set FA-26 properly.	Axis fault
Local parameter backup failure	E32.00	An exception occurs during local parameter backup.	Check whether the backed-up drive unit station numbers exceeds the quantity of drive units installed.	Power supply unit fault
Excessive speed deviation	E42.00	Motor auto-tuning is not performed.	Perform motor auto-tuning.	Axis fault
		F9-73 and F9-74 are set incorrectly.	Set F9-73 and F9-74 correctly based on actual conditions.	Axis fault
Motor overtemperature	E45.00	The temperature sensor is connected loosely.	Check the temperature sensor connection. Re-connect the temperature sensor if necessary.	Axis fault
		The motor temperature is too high.	Increase the carrier frequency or take other heat dissipation measures to cool the motor.	Axis fault
		The motor overtemperature protection thresholds (F9-57, F9-59, and F9-61) are too low.	Increase the motor overtemperature protection thresholds (90°C to 100°C for common motors).	Axis fault

Fault Name	Panel Display	Possible Cause	Solution	Fault Type
STO fault	STO	STO1 and STO2 signals are disconnected simultaneously.	Check the wiring of STO1 and STO2.	Axis fault
	E47.02	STO1 and STO2 signals are disconnected separately.	Check the wiring of STO1 and STO2.	Axis fault
	E47.03	Undervoltage or overvoltage occurs on the STO circuit.	Contact the technical support personnel.	Axis fault
	E47.04	The STO circuit input subsystem is abnormal.	Contact the technical support personnel.	Axis fault
	E47.05	The STO blocking output chip is abnormal.	Contact the technical support personnel.	Axis fault
Braking unit fault	E61.01	The braking transistor is short-circuited at stop.	Check whether the resistance and power of the braking resistor are too low. Check whether the braking resistor is short-circuited.	Power supply unit fault
	E61.02	Braking transistor open circuit occurs.	Contact the technical support personnel.	Power supply unit fault
	E61.03	The braking transistor is short-circuited during running.	Check whether the resistance and power of the braking resistor are too low. Check whether the braking resistor is short-circuited.	Power supply unit fault
Fan fault	E80.00	The fan is faulty.	Ensure that the fan on the drive unit is connected properly. Ensure that the fan rotates freely.	Axis fault

Fault Name	Panel Display	Possible Cause	Solution	Fault Type
Hardware I/O resource loss	A99.01	The selected DI hardware resource does not exist.	Ensure that the power supply unit and extension cards are firmly installed. Check parameters F4-00 to F4-15 of the drive unit to ensure that no non-existing DI hardware resource is selected.	Axis fault
	A99.02	The selected DO/RO hardware resource does not exist.	Ensure that the power supply unit and extension cards are firmly installed. Check the DO/RO hardware resources of the drive unit to ensure that no non-existing DO/RO hardware resource is selected.	Axis fault
	A99.03	The selected AI hardware resource does not exist.	Ensure that the power supply unit and extension cards are firmly installed. Check parameters F4-25 to F4-29 of the drive unit to ensure that no non-existing AI hardware resource is selected.	Axis fault
	A99.04	The selected DI and DO/RO hardware resources do not exist.	Ensure that the power supply unit and extension cards are firmly installed. Check the drive unit according to the solutions to A99.01 and A99.02.	Axis fault
	A99.05	The selected DI and AI hardware resources do not exist.	Ensure that the power supply unit and extension cards are firmly installed. Check the drive units according to the troubleshooting measures for A99.01 and A99.03.	Axis fault
	A99.06	The selected DO/RO and AI hardware resources do not exist.	Ensure that the power supply unit and extension cards are firmly installed. Check the drive units according to the troubleshooting measures for A99.02 and A99.03.	Axis fault
	A99.07	The selected DI, DO/RO, and AI hardware resources do not exist.	Ensure that the power supply unit and extension cards are firmly installed. Check the drive unit according to the solutions to A99.01, A99.02, and A99.03.	Axis fault

Appendix Electrical Wiring

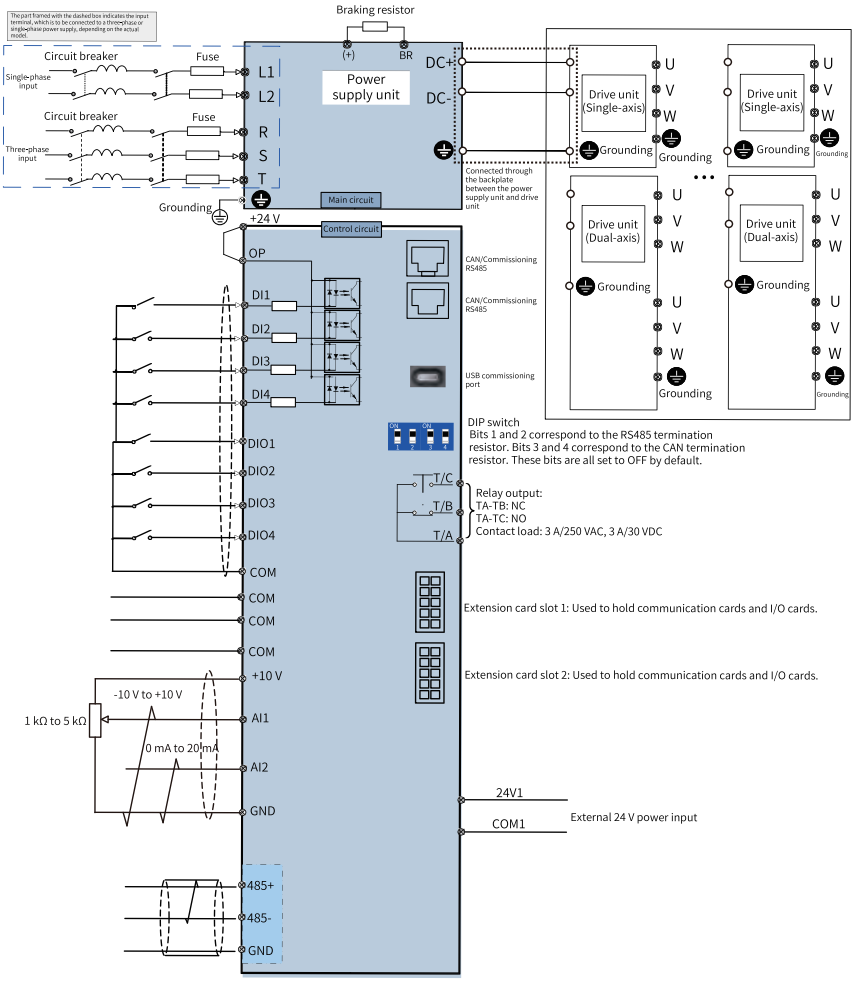

Figure -5 Electrical wiring

19011494A02

Copyright © Shenzhen Inovance Technology Co., Ltd.

Shenzhen Inovance Technology Co., Ltd.

www.inovance.com

Add.: Building E, Hongwei Industry Park, Liuxian Road, Baocheng No. 70 Zone, Bao'an District, Shenzhen
Tel: (0755) 2979 9595 Fax: (0755) 2961 9897

Suzhou Inovance Technology Co., Ltd.

www.inovance.com

Add.: No. 16 Youxiang Road, Yuexi Town, Wuzhong District, Suzhou 215104, P.R. China
Tel: (0512) 6637 6666 Fax: (0512) 6285 6720