INOVANCE

# MD800 Series AC Drive (Multidrive System)
# Maintenance Guide

Document code: 19011495 A00

# Preface

## Introduction

The MD800 series AC drive is a new generation of standard AC drive (multidrive system) designed for low-power and multidrive applications in the traditional OEM industry. It is widely applied in industries such as printing and packaging, woodworking machine tools, food and beverage, logistics and warehousing, textile printing and dyeing, fans and pumps.

This guide describes the installation, wiring, quick commissioning, commissioning parameters, and troubleshooting of the MD800 series product.

## More Documents

| Document Name | Description |
|---|---|
| MD800 Series AC Drive (Multidrive System) Quick Installation and Commissioning Guide | Describes the installation, wiring, quick commissioning, commissioning parameters, and troubleshooting of this product. |
| MD800 Series AC Drive (Multidrive System) Design and Selection Guide | Describes the system composition, technical specifications, and dimensions of the AC drive, specific specifications and selection of options (including installation accessories, cables, and peripheral electrical components), common EMC problems and solutions, and certifications and standards. |
| MD800 Series AC Drive (Multidrive System) Function Guide | Describes the commissioning tools, system commissioning steps, definition of parameters and fault codes, and functions and applications of the product. |
| MD800 Series AC Drive (Multidrive System) Communication Guide | Describes the communication mode, networking, and configuration of the product. |

## Revision History

| Date | Version | Description |
|---|---|---|
| November 2021 | A00 | First release |

## Document Acquisition

This guide is not delivered with the AC drive. You can obtain the PDF version of this document using the following method:

Log in to Inovance's website (*http://en.inovance.cn/*), choose Support > Download, perform keyword search, and download the PDF file.

# Table of Contents

Preface . . . . . 1
Fundamental Safety Instructions . . . . . 3
1 Routine Maintenance and Inspection . . . . . 9
1.1 Routine Maintenance . . . . . 9
1.2 Periodic Inspection Items . . . . . 10
1.3 Main Circuit Insulation Test . . . . . 11
1.4 Component Replacement . . . . . 11
1.4.1 Maintenance Tools . . . . . 11
1.4.2 Replaceable Components . . . . . 12
1.4.3 Replacement . . . . . 12
1.4.3.1 Replacing the Power Supply Unit . . . . . 12
1.4.3.2 Replacing the Drive Unit . . . . . 14
1.4.3.3 Replacing the Filter Module . . . . . 15
1.4.3.4 Replacing the Extension Card . . . . . 16
1.4.3.5 Replacing the Fan . . . . . 16
1.4.3.6 Replacing the T-BUS Base . . . . . 17
1.4.4 Storage and Warranty . . . . . 21
2 Troubleshooting . . . . . 23
2.1 Common Faults and Diagnosis . . . . . 23
2.1.1 Display of Alarms and Faults . . . . . 23
2.1.2 Restart upon Faults . . . . . 23
2.1.3 Common Troubleshooting . . . . . 25
2.1.4 Troubleshooting During Trial Run in Different Control Modes . . . . . 27
2.2 List of Fault Codes . . . . . 29

# Fundamental Safety Instructions

## Safety Precautions

1. This chapter presents essential safety instructions for a proper use of the equipment. Before operating the equipment, read through the guide and comprehend all the safety instructions. Failure to comply with the safety instructions may result in death, severe personal injuries, or equipment damage.
2. "CAUTION", "WARNING", and "DANGER" items in the guide only indicate some of the precautions that need to be followed; they just supplement the safety precautions.
3. Use this equipment according to the designated environment requirements. Damage caused by improper use is not covered by warranty.
4. Inovance shall take no responsibility for any personal injuries or property damage caused by improper use.

## Safety Levels and Definitions

| | |
|---|---|
| DANGER | Indicates that failure to comply with the notice will result in death or severe personal injuries. |
| WARNING | Indicates that failure to comply with the notice may result in death or severe personal injuries. |
| CAUTION | Indicates that failure to comply with the notice may result in minor or moderate personal injuries or equipment damage. |

## General Safety Instructions

- Drawings in the guide are sometimes shown without covers or protective guards. Remember to install the covers or protective guards as specified first, and then perform operations in accordance with the instructions.
- The drawings in the guide are shown for illustration only and may be different from the product you purchased.

| Unpacking |
|---|
| WARNING<br>• Do not install the equipment if you find damage, rust, or signs of use on the equipment or accessories upon unpacking.<br>• Do not install the equipment if you find water seepage or missing or damaged components upon unpacking.<br>• Do not install the equipment if you find the packing list does not conform to the equipment you received. |

CAUTION

- Check whether the packing is intact and whether there is damage, water seepage, dampness, and deformation before unpacking.
- Unpack the package by following the unpacking sequence. Do not strike the package violently.
- Check whether there is damage, rust, or injuries on the surface of the equipment and equipment accessories before unpacking.
- Check whether the package contents are consistent with the packing list before unpacking.

**Storage and Transportation**

WARNING

- Large-scale or heavy equipment must be transported by qualified professionals using specialized hoisting equipment. Failure to comply may result in personal injuries or equipment damage.
- Before hoisting the equipment, ensure the equipment components such as the front cover and terminal blocks are secured firmly with screws. Loosely-connected components may fall off and result in personal injuries or equipment damage.
- Never stand or stay below the equipment when the equipment is being hoisted by the hoisting equipment.
- When hoisting the equipment with a steel rope, ensure the equipment is hoisted at a constant speed without suffering from vibration or shock. Do not turn the equipment over or let the equipment stay hanging in the air. Failure to comply may result in personal injuries or equipment damage.

CAUTION

- Handle the equipment with care during transportation and mind your steps to prevent personal injuries or equipment damage.
- When carrying the equipment with bare hands, hold the equipment casing firmly with care to prevent parts from falling. Failure to comply may result in personal injuries.
- Store and transport the equipment based on the storage and transportation requirements. Failure to comply will result in equipment damage.
- Avoid storing or transporting the equipment in environments with water splash, rain, direct sunlight, strong electric field, strong magnetic field, and strong vibration.
- Avoid storing the equipment for more than three months. Long-term storage requires stricter protection and necessary inspections.
- Pack the equipment strictly before transportation. Use a sealed box for long-distance transportation.
- Never transport the equipment with other equipment or materials that may harm or have negative impacts on this equipment.

**Installation**

DANGER

- The equipment must be operated only by professionals with electrical knowledge.

WARNING

- Read through the guide and safety instructions before installation.
- Do not install this equipment in places with strong electric or magnetic fields.
- Before installation, check that the mechanical strength of the installation site can bear the weight of the equipment. Failure to comply will result in mechanical hazards.
- Do not wear loose clothes or accessories during installation. Failure to comply may result in an electric shock.
- When installing the equipment in a closed environment (such as a cabinet or casing), use a cooling device (such as a fan or air conditioner) to cool the environment down to the required temperature. Failure to comply may result in equipment over-temperature or a fire.
- Do not retrofit the equipment.
- Do not fiddle with the bolts used to fix equipment components or the bolts marked in red.
- When the equipment is installed in a cabinet or final assembly, a fireproof enclosure providing both electrical and mechanical protections must be provided. The IP rating must meet IEC standards and local laws and regulations.
- Before installing devices with strong electromagnetic interference, such as a transformer, install a shielding device for the equipment to prevent malfunction.
- Install the equipment onto an incombustible object such as a metal. Keep the equipment away from combustible objects. Failure to comply will result in a fire.

CAUTION

- Cover the top of the equipment with a piece of cloth or paper during installation. This is to prevent unwanted objects such as metal chippings, oil, and water from falling into the equipment and causing faults. After installation, remove the cloth or paper on the top of the equipment to prevent over-temperature caused by poor ventilation due to blocked ventilation holes.
- Resonance may occur when the equipment operating at a constant speed executes variable speed operations. In this case, install the vibration-proof rubber under the motor frame or use the vibration suppression function to reduce resonance.

**Wiring**

DANGER

- Equipment installation, wiring, maintenance, inspection, or parts replacement must be performed only by professionals.
- Before wiring, cut off all the power supplies of the equipment, and wait for at least the time designated on the equipment warning label before further operations because residual voltage still exists after power-off. After waiting for the designated time, measure the DC voltage in the main circuit to ensure the DC voltage is within the safe voltage range. Failure to comply will result in an electric shock.
- Do not perform wiring, remove the equipment cover, or touch the circuit board with power ON. Failure to comply will result in an electric shock.
- Check that the equipment is grounded properly. Failure to comply will result in an electric shock.

WARNING

- Do not connect the input power supply to the output end of the equipment. Failure to comply will result in equipment damage or even a fire.
- When connecting a drive to the motor, check that the phase sequences of the drive and motor terminals are consistent to prevent reverse motor rotation.
- Cables used for wiring must meet cross sectional area and shielding requirements. The shield of the cable must be reliably grounded at one end.
- Fix the terminal screws with the tightening torque specified in the guide. Improper tightening torque may overheat or damage the connecting part, resulting in a fire.
- After wiring is done, check that all cables are connected properly, with no screws, washers, or exposed cables left inside the equipment. Failure to comply may result in an electric shock or equipment damage.

CAUTION

- During wiring, follow the proper electrostatic discharge (ESD) procedure, and wear an antistatic wrist strap. Failure to comply will damage the equipment or the internal circuits of the equipment.
- Use shielded twisted pairs for the control circuit. Connect the shield to the grounding terminal of the equipment for grounding purpose. Failure to comply will result in equipment malfunction.

**Power-on**

DANGER

- Before power-on, check that the equipment is installed properly with reliable wiring and the motor can be restarted.
- Check that the power supply meets equipment requirements before power-on to prevent equipment damage or a fire.
- After power-on, do not open the cabinet door or protective cover of the equipment, touch any terminal, or disassemble any unit or component of the equipment. Failure to comply will result in an electric shock.

WARNING

- Perform a trial run after wiring and parameter setting to ensure the equipment operates safely. Failure to comply may result in personal injuries or equipment damage.
- Before power-on, check that the rated voltage of the equipment is consistent with that of the power supply. Failure to comply may result in a fire.
- Before power-on, check that no one is near the equipment, motor, or machine. Failure to comply may result in death or personal injuries.

**Operation**

DANGER

- The equipment must be operated only by professionals. Failure to comply will result in death or personal injuries.
- Do not touch any connecting terminals or disassemble any unit or component of the equipment during operation. Failure to comply will result in an electric shock.

WARNING

- Do not touch the equipment casing, fan, or resistor with bare hands to feel the temperature. Failure to comply may result in personal injuries.
- Prevent metal or other objects from falling into the equipment during operation. Failure to comply may result in a fire or equipment damage.

**Maintenance**

DANGER

- Equipment installation, wiring, maintenance, inspection, or parts replacement must be performed only by professionals.
- Do not maintain the equipment with power ON. Failure to comply will result in an electric shock.
- Before maintenance, cut off all the power supplies of the equipment and wait for at least the time designated on the equipment warning label.
- In case of a permanent magnet motor, do not touch the motor terminals immediately after power-off because the motor terminals will generate induced voltage during rotation even after the equipment power supply is off. Failure to comply will result in an electric shock.

WARNING

- Perform routine and periodic inspection and maintenance on the equipment according to maintenance requirements and keep a maintenance record.

**Repair**

DANGER

- Equipment installation, wiring, maintenance, inspection, or parts replacement must be performed only by professionals.
- Do not repair the equipment with power ON. Failure to comply will result in an electric shock.
- Before inspection and repair, cut off all the power supplies of the equipment and wait for at least the time designated on the equipment warning label.

WARNING

- When the fuse is blown or the circuit breaker or earth leakage current breaker (ELCB) trips, wait for at least the time designated on the equipment warning label before power-on or further operations. Failure to comply may result in death, personal injuries, or equipment damage.
- When the equipment is faulty or damaged, the troubleshooting and repair work must be performed by professionals that follow the repair instructions, with repair records kept properly.
- Replace quick-wear parts of the equipment according to the replacement instructions.
- Do not use damaged equipment. Failure to comply may result in death, personal injuries, or severe equipment damage.
- After the equipment is replaced, check the wiring and set parameters again.

| Disposal |
| --- |
| WARNING<br>• Dispose of retired equipment in accordance with local regulations and standards. Failure to comply may result in property damage, personal injuries, or even death.<br>• Recycle retired equipment by observing industry waste disposal standards to avoid environmental pollution. |

## Safety Labels

For safe equipment operation and maintenance, comply with the safety labels on the equipment. Do not damage or remove the safety labels. See the following table for descriptions of the safety labels.

| Safety Label | Description |
| --- | --- |
| | • Read through the safety instructions before operating the equipment. Failure to comply may result in death, personal injuries, or equipment damage.<br>• Do not touch the terminals or remove the cover with power ON or within 10 min after power-off. Failure to comply will result in an electric shock. |

# 1 Routine Maintenance and Inspection

## 1.1 Routine Maintenance

Table 1–1 List of routine inspection items

| Inspection Item | Check Items | Solution | Checked |
|---|---|---|---|
| Motor | Check whether abnormal sounds and vibration occur on the motor. | Check whether the mechanical connection is normal.<br>Check whether phase loss occurs on the motor.<br>Check whether retaining screws of the motor are tightened. | |
| Fan | Check whether the cooling fans of the AC drive and motor are normal. | Check whether the cooling fan of the AC drive is normal.<br>Check whether the cooling fan of the motor is normal.<br>Check whether the ventilation is clogged.<br>Check whether the ambient temperature is within the permissible range. | |
| Installation environment | Check whether the cabinet and cable ducts are normal. | Check input and output cables of the AC drive for damaged insulation.<br>Check the mounting bracket for vibration.<br>Check whether copper busbars and cable terminals become loose or get corroded. | |
| Load | Check whether the running current of the AC drive exceeds the rated current of the AC drive and motor for a certain period. | Check whether the motor parameter settings are correct.<br>Check whether the motor is overloaded.<br>Check whether the mechanical vibration is above 0.6 g. | |
| Input voltage | Check whether the power voltage of the main circuit and control circuit is within the permissible range. | Check whether the input voltage is within the permissible range.<br>Check whether startup of heavy load exists. | |

## 1.2 Periodic Inspection Items

Check the items listed in the following table every one or two years, dependent on actual use and work environment of the product.

Table 1–2 Periodic inspection items

| Inspection Item | Check Items | Solution | Checked |
|---|---|---|---|
| AC drive | Check for waste, dirt, and dust on the surface of the AC drive, and capacitor leakage. | Power off the AC drive cabinet.<br>When cleaning waste and dust, use a vacuum cleaner to prevent direct contact with any components.<br>Wipe surface dirt gently with a soft cloth immersed in neutral detergent.<br>Contact Inovance for electrolytic capacitor replacement in case of capacitor leakage. | |
| Cables | Check power cables and connections for discoloration.<br>Check wiring insulation for aging or wear. | Replace cracked cables.<br>Replace damaged terminals. | |
| Peripheral devices such as electromagnetic contactor | Check devices for loose connection and abnormal noise during operation.<br>Check peripherals for short circuit, water stains, dilation, and cracks. | Replace abnormal peripheral devices. | |
| Ventilation | Check for blocked ventilation and heatsink.<br>Check for fan damage. | Clean the ventilation.<br>Replace the fan. | |
| Control circuit | Check control elements for loose contact. Check for loose terminal screws.<br>Check control cables for cracked insulation. | Clear foreign matters from the surface of control cables and terminals.<br>Replace damaged or corroded control cables. | |

## 1.3 Main Circuit Insulation Test

Before measuring insulation resistance with a megger (500 VDC megger recommended), disconnect the main circuit from the AC drive. Do not measure the control circuit insulation resistance with an insulation resistance meter. For connection of the megger, see the figure below. (Do not conduct high voltage (> 500 V) tests, which are completed before delivery.)

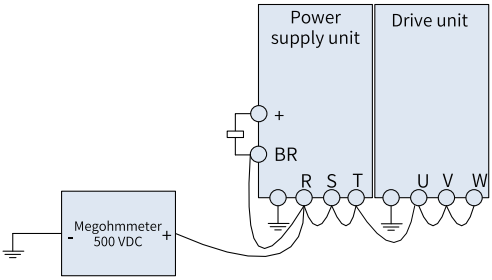


Figure 1-1 Main circuit insulation test

The measured insulation resistance must be greater than 5 MΩ.

## 1.4 Component Replacement

### 1.4.1 Maintenance Tools

Table 1–3 Maintenance tools

| Tool | Diagram |
|---|---|
| Crosshead and flathead (2.5 mm) screwdrivers | |
| Tape measure | |

| Tool | Diagram |
| --- | --- |
| Gloves | |
| M4X12 cross recessed pan head screws (with flat washer and spring washer) | - |
| Wiring tools (delivered with the power supply unit) | |

### 1.4.2 Replaceable Components

The following components are replaceable:

- Power supply unit
- Drive unit
- Filter module
- Extension card
- Fan
- T-BUS base

For replacement of the above components within the warranty period, please contact Inovance agent or sales manager. The components will be replaced or repaired according to Inovance policies.

## 1.4.3 Replacement

### 1.4.3.1 Replacing the Power Supply Unit

1. Removing
   a. Power off the AC drive and remove all terminals and LAN cables of the power supply unit.

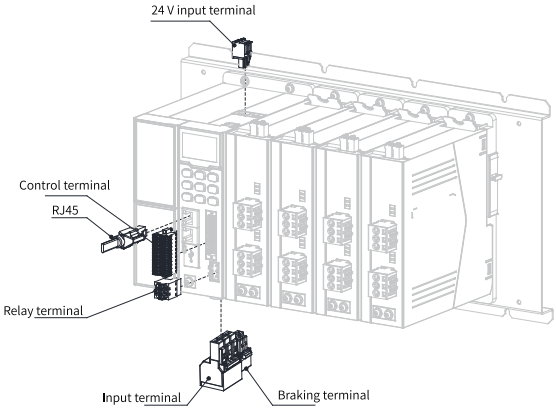


b. Use a crosshead screwdriver to remove the four M4X12 screws on the top and bottom of the power supply unit.

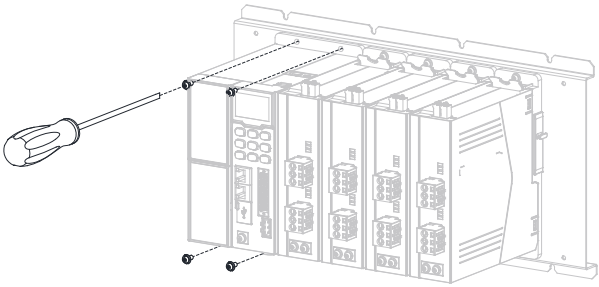

c. Pull leftward to remove the power supply unit.

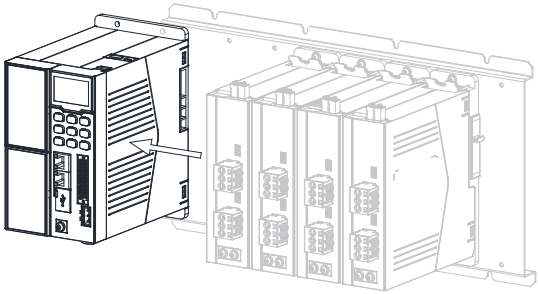

2. Installing

Install the power supply unit in the reverse order of the removal process.

Reserve a 20 mm clearance on the left of the power supply unit.

### 1.4.3.2 Replacing the Drive Unit

1. Removing
   a. Power off the AC drive and remove all terminals of the drive unit.

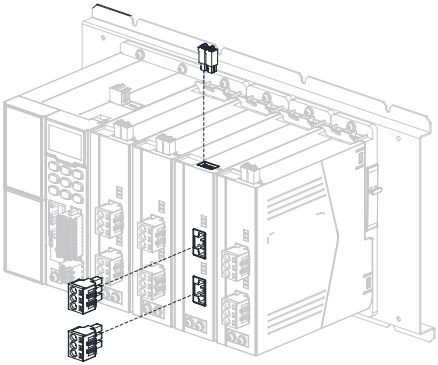

   b. Press the U-shaped buckle on the top of the drive unit to detach the drive unit from the T-BUS base, and then rotate and remove the drive unit from the rotating shaft that connects the AC drive to the T-BUS base.

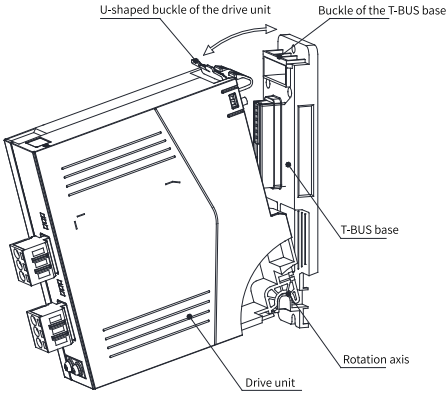

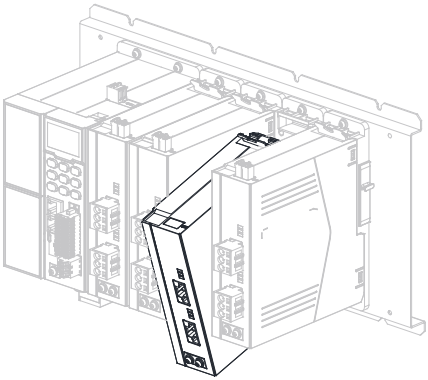

2. Installing
   Install the drive unit in the reverse order of the removal process.

### 1.4.3.3 Replacing the Filter Module

1. Removing
   a. Power off the AC drive and remove the input terminal, output terminal, and grounding cable of the filter module.

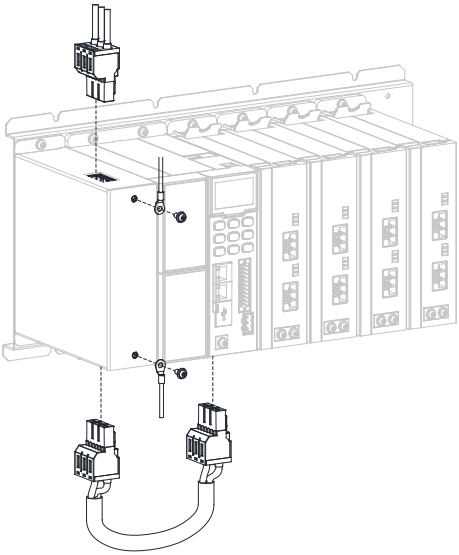

   b. Use a crosshead screwdriver to remove the two M4X12 screws.

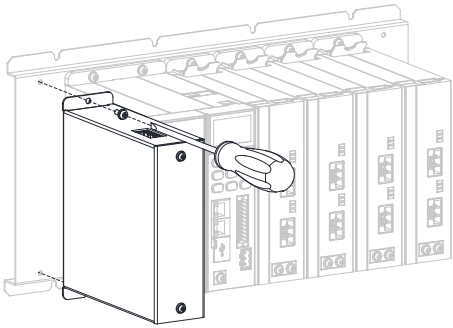

2. Installing
   Install the filter module in the reverse order of the removal process.

### 1.4.3.4 Replacing the Extension Card

The extension card is on the power supply unit.

#### Prerequisites

Before replacement, disconnect the I/O signal cable or LAN cable from the extension card terminal.

1. Removing
   a. Insert a flathead screwdriver into the recess of the extension card, and pry out the extension card to the left with proper force.

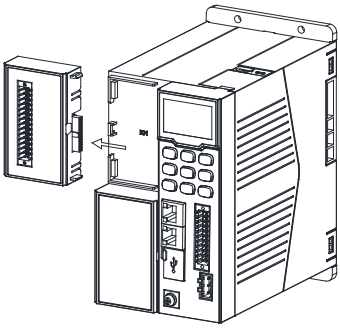

2. Installing
   Install the extension card in the reverse order of the removal process.

### 1.4.3.5 Replacing the Fan

Fans of both the power supply unit and the drive unit can be replaced. The following takes replacing the fan of the drive unit as an example.

1. Removing
   a. Press the four buckles as shown in ① and draw the fan out.

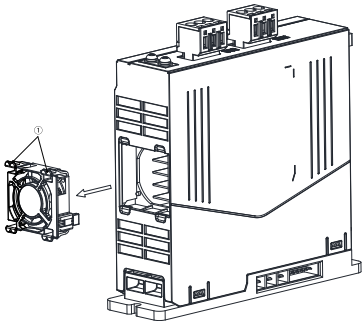


2. Installing
   a. Align the fan terminal with the slot as shown in ① and push in the fan until the fan buckle catches the four corners of the slot.

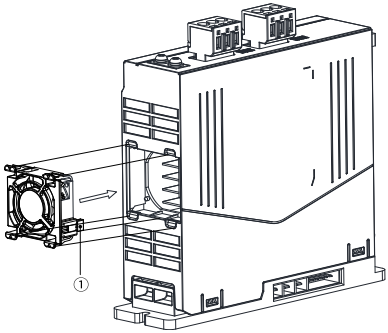


## 1.4.3.6 Replacing the T-BUS Base

The T-BUS base is on the drive unit.

### Procedure

1. Power off the AC drive. Remove, in sequence, the output terminals of both the drive unit whose T-BUS base is to be replaced and the drive unit on its right.

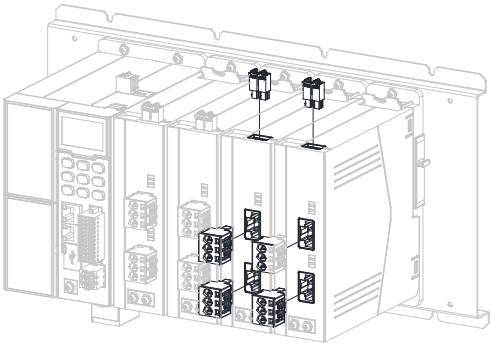

2. Unscrew, in sequence, the M4X12 screws of both the drive unit whose T-BUS base is to be replaced and the drive unit on its right.

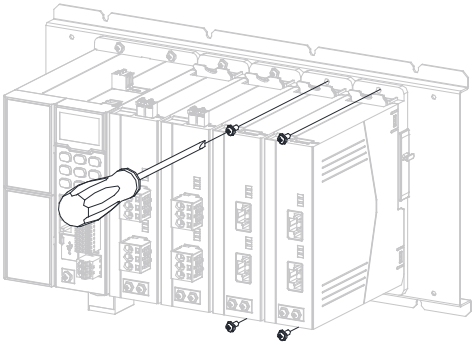

3. Pull rightward to remove both the drive unit whose T-BUS base is to be replaced and the drive unit on its right.

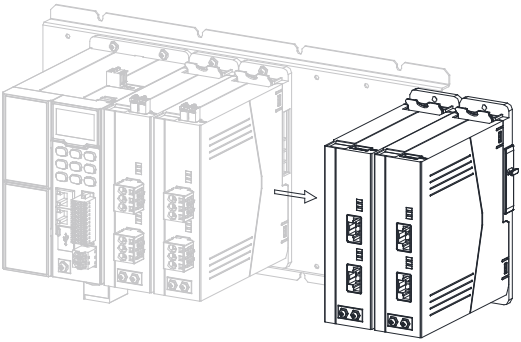

4. Press the U-shaped buckle of the drive unit to detach the U-shaped buckle from the buckle of the T-BUS base, and remove the drive unit by rotating it around the the rotating shaft.

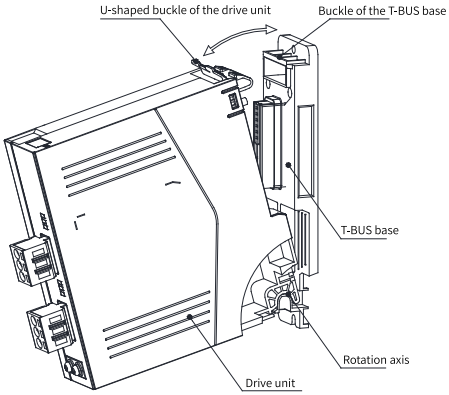


5. Install a new T-BUS base on the AC drive.

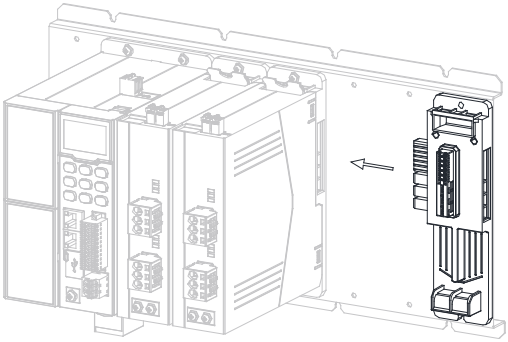

6. Use a crosshead screwdriver to tighten the two M4X12 screws.

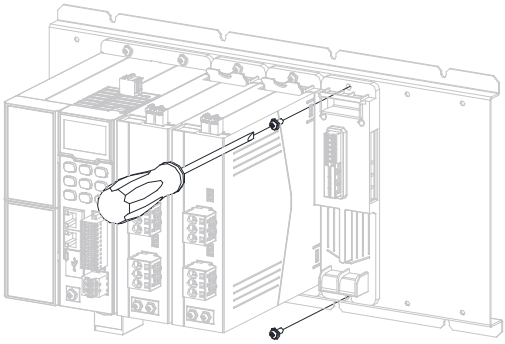

7. Install the removed drive unit on the T-BUS base (properly buckle the U-shaped buckle at the top).

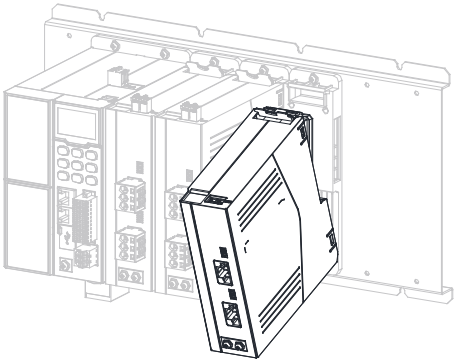

8. Install the other drive unit and tighten the screws.

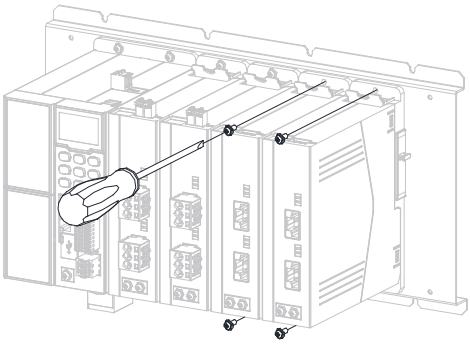

9. Install the output terminals and STO terminals (optional) back to the drive unit.

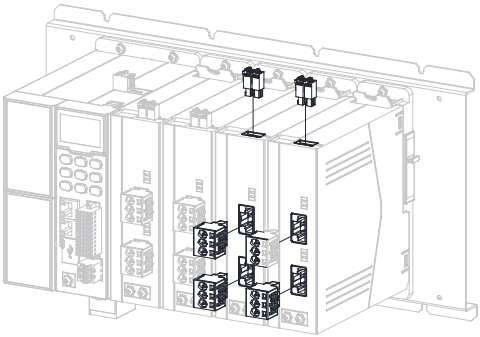

## 1.4.4 Storage and Warranty

### Storage

For storage of the AC drive, pay attention to the following three aspects:

- For storage, pack the AC drive with the original packing box provided by Inovance.
- Avoid exposing the AC drive to moisture, high temperature, or outdoor direct sunlight for an extended period.
- After one-year (or a longer period) storage of the AC drive without power-on, recover the electrolytic capacitor; otherwise, the electrolytic capacitor may be damaged when the AC drive is powered on. The procedure for recovering the electrolytic capacitor is as follows:

  1. Gradually apply an input voltage to the AC drive.

     a. Use an AC regulator to gradually increase the input voltage to the rated voltage in increments of about 50 V/s.
     b. Connect the AC drive to a DC power supply. If the DC power supply does not support current adjustment, connect the output end of the DC power supply in series with a resistor rated at about 470 Ω/500 W, and then connect it to any two of the R/S/T three-phase input terminals of the AC drive before powering on the AC drive. If the DC power supply supports current adjustment, skip the connection of the resistor.

  2. Recover the electrolytic capacitor.

     The time for recovery increases with the system storage time. For storage within one year, the electrolytic capacitor does not need to be recovered. For storage for one year or more, the electrolytic capacitor needs to be recovered. The following table lists the recovery time required.

Table 1–4 Recovery time required based on system storage time

| AC Drive Storage Time (T) (in Years) | Recovery Time (in Hours) (AC Drive is in standby state and not running) | Remarks |
|---|---|---|
| 0 < T ⩽ 1 | 0 | Recovery not required |
| 1 < T ⩽ 2 | 2 | Recovery at room temperature |
| 2 < T ⩽ 3 | 3 | |
| 3 < T ⩽ 4 | 4 | |
| 4 < T ⩽ 5 | 5 | |
| 5 < T ⩽ 6 | 6 | |
| ... | ... | |

During capacitor recovery, do not run the AC drive with load. Only after the required recovery time expires, the AC drive can run with load or re-packed and stored after power-off.

## Warranty

Free warranty applies to the AC drive itself only. Inovance provides an 18-month free warranty to the AC drive from the date of manufacturing (subject to the barcode on the AC drive or contract if any) for failures or damages under normal use conditions. When the warranty period expires, a reasonable repair fee will be charged.

Within the 18-month warranty period, a reasonable repair fee will be charged for damages due to the following causes:

- Operations not following the user instructions
- Fire, flood, or abnormal voltage
- Using the AC drive for any non-intended applications
- Using the AC drive beyond permissible specifications
- Force majeure (natural disaster, earthquake, and lightning strike) and secondary damages

The repair fee is charged according to Inovance's standardized price list. If there is an agreement, the agreement prevails.

# 2 Troubleshooting

## 2.1 Common Faults and Diagnosis

### 2.1.1 Display of Alarms and Faults

Upon exceptions, the AC drive stops output immediately, the fault indicator blinks in red, and the contact of the fault relay acts. Faults are divided into errors and warnings. The priority of errors is higher than that of warnings.

- Errors, such as

.
- Warnings, such as

.

### 2.1.2 Restart upon Faults

Table 2–1 Method

| Stage | Solution | Description |
|---|---|---|
| When a fault occurs | Check the operating panel for detailed information about the last three faults, such as the fault time, fault type, fault subcode, and frequency, current, bus voltage, input/output terminal state, accumulative power-on time, accumulative running time, IGBT temperature upon the faults. | View the information through F9-14 to F9-46. |
| Before fault reset | Locate and rectify the fault cause based on the fault code displayed on the operating panel. | - |

| Stage | Solution | Description |
|---|---|---|
| During fault reset | 1. Set the DI hardware source (F4-00, F4-02, F4-04, F4-06, F4-08, F4-10, F4-12, or F4-14) to a hardware I/O.<br>Set any of F4-01, F4-03, F4-05, F4-07, F4-09, F4-11, F4-13, and F4-15= 9 to 9 (fault reset). | 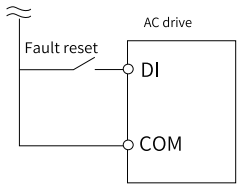 |
| | 2. Set to reset faults in any operating mode. | 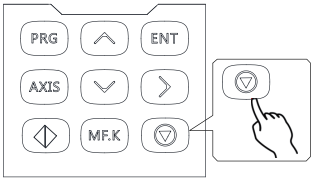 |
| | 3. Power off and then power on the AC drive for automatic reset. Disconnect the main circuit power supply and connect the power supply again after the display on the operating panel disappears. | 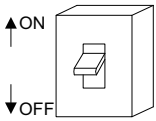 |
| | 4. Use a host controller for reset (for communication control mode).<br>Verify that F0-02 is set to 2 (communication control mode) and write "7" (fault reset) to the communication address 2000H by using the host controller. | 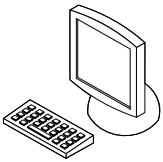 |

### 2.1.3 Common Troubleshooting

Table 2–2 Symptoms and troubleshooting

| No. | Symptom | Possible Cause | Solution |
|---|---|---|---|
| 1 | The display does not work upon power-on. | The grid voltage is zero or too low. | Check the input power supply. |
| | | The switched-mode power supply (SMPS) on the driver board of the AC drive is faulty. | Check the bus voltage. |
| | | The control board or operating panel is faulty. | Contact Inovance. |
| | | The power supply unit is damaged. | |
| 2 | "-H-C" is displayed upon power-on. -H-C | Related components on the control board are damaged. | Contact Inovance. |
| | | The motor or motor cable is short-circuited to ground. | |
| | | The grid voltage is too low. | |
| 3 | "E23.00" is displayed upon power-on. E23.00 | The motor or output cable is short-circuited to the ground. | Use a megger to measure the insulation resistance of the motor and output cable. |
| | | The AC drive is damaged. | Contact Inovance. |
| 4 | The display is normal upon power-on, but "-H-C" is displayed and the AC drive stops immediately after startup. -H-C | Wiring of any external control terminals is short-circuited. | Rectify the short circuit fault. |

| No. | Symptom | Possible Cause | Solution |
|---|---|---|---|
| 5 | "E14.00" (IGBT overtemperature) is reported frequently. | The carrier frequency is set too high. | Reduce the carrier frequency (F0-15). |
| | | The fan is damaged, or the air filter is blocked. | Replace the fan or clean the air filter. |
| | | Internal devices (thermocouple or other devices) of the AC drive are damaged. | Contact Inovance. |
| 6 | The motor does not rotate when the AC drive is running. | The motor and motor cables are not properly connected. | Double check the connection between the AC drive and motor. |
| | | Related AC drive parameters (motor parameters) are set incorrectly. | Restore the AC drive to factory defaults and set the following parameters correctly:<br>Ensure appropriate settings of encoder parameters and rated motor specifications (such as rated motor frequency and rated motor speed).<br>Ensure appropriate settings of F0-01 and F0-02.<br>In the case of startup with heavy load under the V/f control mode, tune up F3-01. |
| | | The driver board is faulty. | Contact Inovance. |
| 7 | DI terminals are inactive. | Related parameters are set incorrectly. | Check and set parameters in group F4 again. |
| | | External signal transmission errors occur. | Re-connect external signal cables. |
| | | The jumper across the OP and +24 V terminals becomes loose. | Check and ensure secure connection of the jumper across the OP and +24 V terminals. |
| | | The control board is faulty. | Contact Inovance. |
| 8 | The AC drive reports overcurrent and overvoltage frequently. | Motor parameters are incorrectly set. | Adjust motor parameters or perform motor auto-tuning again. |
| | | The acceleration/ deceleration time is in appropriate. | Set appropriate acceleration/ deceleration time. |
| | | The load fluctuates. | Contact Inovance. |

| No. | Symptom | Possible Cause | Solution |
|---|---|---|---|
| 9 | The motor coasts to stop, or braking is disabled during deceleration or deceleration to stop. | Overvoltage stall protection is enabled. | If a braking resistor is configured, set F3-23 to 0. |

### 2.1.4 Troubleshooting During Trial Run in Different Control Modes

- SVC (F0-01 set to 0)
  This mode is used to control the speed and torque of motor in scenarios without an encoder for speed feedback. In this control mode, motor auto-tuning is required to obtain motor-related parameters.

Table 2–3 Troubleshooting in SVC mode

| Problem | Solution |
|---|---|
| Overload or overcurrent reported during motor startup | Set motor parameters F1-01 to F1-05 according to the motor nameplate.<br>Perform motor auto-tuning (by setting F1-37 to 03). Dynamic auto-tuning on all parameters of the motor (by setting F1-37 to 02) is preferred when possible.<br>Reduce the value of F2-10 (Digital setting of torque limit in speed control (motoring)) to the range of 120% to 150%. |
| Slow torque or speed response and large motor vibration at frequencies below 5 Hz | In speed control mode (A0-00 set to 00), increase speed loop proportional gain by increasing the value of F2-00 (Speed loop proportional gain Kp at low speed) in increments of 10 or reduce the speed loop integral time by reducing the value of F2-01 (Speed loop integral time Ti at low speed) in decrements of 0.05 to improve speed response. In the case of vibration, reduce the values of F2-00 and F2-01.<br>In torque control mode (A0-00 set to 01), increase the applied torque in the case of startup failure because it may be resulted from large static friction or small torque of the mechanical equipment.<br>In torque control mode (A0-00 set to 01), enable speed fluctuation suppression to mitigate speed fluctuation in the case of large motor speed fluctuation of the winding equipment because it may be resulted from tension fluctuation during winding of the winding materials. |

| Problem | Solution |
|---|---|
| Slow torque or speed response and large motor vibration at frequencies above 5 Hz | To improve torque and speed response, increase speed loop proportional gain by increasing the value of F2-03 (Speed loop proportional gain Kp at high speed) in increments of 10 or reduce the speed loop integral time by reducing the value of F2-04 (Speed loop integral time Ti at high speed) in decrements of 0.05.<br>In torque control mode (A0-00 set to 01), increase the applied torque in the case of startup failure because it may be resulted from large static friction or small torque of the mechanical equipment.<br>In torque control mode (A0-00 set to 01), enable speed fluctuation suppression to mitigate speed fluctuation in the case of large motor speed fluctuation of the winding equipment because it may be resulted from tension fluctuation during winding of the winding materials. |
| Low speed accuracy | In the case of excessive speed deviation during with-load operation, increase the value of F2-06 in increments of 10%. |
| Obvious speed fluctuation | When the motor speed fluctuates abnormally, increase F2-07 (Speed feedback filter time) in FVC mode or A9-05 (Speed filter of asynchronous motor in SVC mode) in SVF mode in increments of 0.001s.<br>Increase the speed loop proportional gain. |
| Loud motor noise | Increase the value of F0-15 in increments of 1.0 kHz. Note that an increase in the carrier frequency will result in an increase in the leakage current of the motor. |
| Insufficient motor torque | Check whether the torque upper limit is set too low. If yes, increase the value of F2-10 in speed control mode or increase the torque reference in torque control mode. |

- V/f control mode (F0-01 set to 2)
  This mode is applicable to scenarios without an encoder for speed feedback. You just need to set the motor parameters according to the motor nameplate because this mode is not dependent on motor parameters. The set value of rated motor current has an effect on motor overload protection.

Table 2–4 Troubleshooting in V/f control mode

| Problem | Solution |
|---|---|
| Motor oscillation during operation | Increase the value of F3-11 (V/f oscillation suppression gain) to 100 at most in increments of 10. |
| Overcurrent during high-power startup | Decrease the value of F3-01 in decrements of 0.5%. increase the value of F0-17 (Acceleration time). |
| High current during operation | Set the rated motor voltage (F1-02) and rated motor frequency (F1-04) as appropriate.<br>Decrease the value of F3-01 in decrements of 0.5%, or set the value to 0.0% directly. |

| Problem | Solution |
|---|---|
| Loud motor noise | Increase the value of F0-15 in increments of 1.0 kHz. (Note: Step-up of carrier frequency will increase leakage current of the motor) |
| Overvoltage reported during deceleration or sudden removal of heavy loads | Verify that the overvoltage stall selection (F3-23) is enabled.<br>Increase the overvoltage stall gain (F3-24/F3-25; default value: 30) in increments of 10 (the maximum value is 100).<br>Decrease the value of F3-22 (factory default: 770 V) in decrements of 10 V (the minimum value is 700 V). |
| Overcurrent reported during acceleration or sudden connection of heavy loads | Increase the value of F3-20 (default value: 20) in increments of 10 (the maximum value is 100).<br>Decrease the value of F3-18 (factory default: 150%) in decrements of 10% (the minimum value is 50%). |

## 2.2 List of Fault Codes

The following faults may occur during the use of the AC drive. Troubleshoot the faults according to the solutions described in the following table.

Table 2–5 Fault codes

| Fault Name | Panel Display | Possible Cause | Solution | Fault Type |
|---|---|---|---|---|
| STO product model identification error | E01.06 | The hardware is faulty. | Check the AC drive nameplate to confirm whether the AC drive has the STO function. If not, contact the technical support personnel. | Axis fault |
| AC drive axis type identification setting error | E01.07 | The hardware is faulty. | Check the AC drive nameplate to confirm the axis type (single-axis or dual-axis) of the AC drive. | Axis fault |

| Fault Name | Panel Display | Possible Cause | Solution | Fault Type |
|---|---|---|---|---|
| Overcurrent during acceleration | E02.04 | 1. A grounding fault or short circuit exists in the output circuit of the AC drive.<br>2. The SVC control mode is adopted, and motor auto-tuning is not performed.<br>3. The set acceleration time is too short.<br>4. The overcurrent stall suppression setting is improper.<br>5. The customized torque boost or V/f curve is improper.<br>6. The motor is started while rotating.<br>7. The AC drive suffers external interference. | 1. Check the motor and the relay contactor and make sure that they are not short-circuited.<br>2. Set the motor parameters according to the motor nameplate and perform motor auto-tuning.<br>3. Increase the acceleration time (F0-17).<br>4. Ensure that overcurrent stall suppression (F3-19) is enabled.The overcurrent stall action current (F3-18) is too high. Adjust it to a value between 120% and 160%.The overcurrent stall suppression gain (F3-20) is too low. Adjust it to a value between 20 and 40.<br>5. Adjust the customized torque boost or V/f curve.<br>6. Enable the flying start function or start the AC drive after the motor stops.<br>7. Check whether the fault current reaches the overcurrent stall suppression current (F3-18) by viewing the fault log. If not, the fault is possibly caused by external interference. In this case, find out the external interference source and rectify the fault.If no external interference source is found, the drive board or Hall device may be faulty. In this case, contact the manufacturer for replacement. | Axis fault |
| | E02.05 | | | Axis fault |
| | E02.06 | | | Axis fault |

| Fault Name | Panel Display | Possible Cause | Solution | Fault Type |
|---|---|---|---|---|
| Overcurrent during deceleration | E03.04 | 1. A grounding fault or short circuit exists in the output circuit of the AC drive.<br>2. The SVC control mode is adopted, and motor auto-tuning is not performed.<br>3. The set deceleration time is too short.<br>4. The overcurrent stall suppression setting is improper.<br>5. The power supply unit is not provided with a braking unit and no braking resistor is installed.<br>6. The AC drive suffers external interference. | 1. Check the motor and make sure that the motor is not short-circuited or open-circuited.<br>2. Set the motor parameters according to the motor nameplate and perform motor auto-tuning.<br>3. Increase the deceleration time (F0-18).<br>4. Ensure that overcurrent stall suppression (F3-19) is enabled.The overcurrent stall action current (F3-18) is too high. Adjust it to a value between 120% and 150%.The overcurrent stall suppression gain (F3-20) is too low. Adjust it to a value between 20 and 40.<br>5. Replace the power supply unit with one that has a braking unit and install a braking resistor.<br>6. Check whether the fault current reaches the overcurrent stall suppression current (F3-18) by viewing the fault log. If not, the fault is possibly caused by external interference. In this case, find out the external interference source and rectify the fault.If no external interference source is found, the drive board or Hall device may be faulty. In this case, contact the manufacturer for replacement. | Axis fault |
| | E03.05 | | | Axis fault |
| | E03.06 | | | Axis fault |

| Fault Name | Panel Display | Possible Cause | Solution | Fault Type |
|---|---|---|---|---|
| Overcurrent at constant speed | E04.04 | 1. A grounding fault or short circuit exists in the output circuit of the AC drive.<br>2. The SVC control mode is adopted, and motor auto-tuning is not performed.<br>3. The overcurrent stall suppression setting is improper.<br>4. The AC drive power rating is too low.<br>5. The AC drive suffers external interference. | 1. Check the motor and make sure that the motor is not short-circuited or open-circuited.<br>2. Set the motor parameters according to the motor nameplate and perform motor auto-tuning.<br>3. Ensure that overcurrent stall suppression (F3-19) is enabled.The overcurrent stall action current (F3-18) is too high. Adjust it to a value between 120% and 150%.The overcurrent stall suppression gain (F3-20) is too low. Adjust it to a value between 20 and 40.<br>4. During stable running, if the running current exceeds the rated motor current or rated output current of the AC drive, replace the AC drive with one of higher power rating.<br>5. Check whether the fault current reaches the overcurrent stall suppression current (F3-18) by viewing the fault log. If not, the fault is possibly caused by external interference. In this case, find out the external interference source and rectify the fault.If no external interference source is found, the drive board or Hall device may be faulty. In this case, contact the manufacturer for replacement. | Axis fault |
| | E04.05 | | | Axis fault |
| | E04.06 | | | Axis fault |

| Fault Name | Panel Display | Possible Cause | Solution | Fault Type |
|---|---|---|---|---|
| Overvoltage during acceleration | E05.00 | The input grid voltage is too high. | Adjust the input grid voltage to the normal range. | Axis fault |
| | | An external force drives the motor during acceleration. | Cancel the external force or install a braking resistor.<br>The maximum rise frequency during overvoltage stall suppression (F3-26) is too low. Adjust it to a value between 5 Hz and 15 Hz when an external force is applied. | |
| | | The overvoltage stall suppression parameters are set improperly. | Ensure that the overvoltage stall suppression function (F3-23) is enabled.<br>The overvoltage stall suppression voltage (F3-22) is too high. Adjust it to a value between 700 V and 770 V.<br>The overvoltage stall suppression frequency gain (F3-24) is too low. Adjust it to a value between 30 and 50. | |
| | | The power supply unit is not provided with a braking unit and no braking resistor is installed. | Replace the power supply unit with one that has a braking unit and install a braking resistor. | |
| | | The acceleration time is too short. | Increase the acceleration time (F0-17). | |
| Overvoltage during deceleration | E06.00 | The overvoltage stall suppression parameters are set improperly. | Ensure that the overvoltage stall suppression function (F3-23) is enabled.<br>The overvoltage stall suppression voltage (F3-22) is too high. Adjust it to a value between 700 V and 770 V.<br>The overvoltage stall suppression frequency gain (F3-24) is too low. Adjust it to a value between 30 and 50. | Axis fault |
| | | An external force drives the motor during deceleration. | Cancel the external force or install a braking resistor.<br>The maximum rise frequency during overvoltage stall suppression (F3-26) is too low. Adjust it to a value between 5 Hz and 15 Hz when an external force is applied. | |
| | | The deceleration time is too short. | Increase the deceleration time (F0-18). | |
| | | The power supply unit is not provided with a braking unit and no braking resistor is installed. | Replace the power supply unit with one that has a braking unit and install a braking resistor. | |

| Fault Name | Panel Display | Possible Cause | Solution | Fault Type |
|---|---|---|---|---|
| Overvoltage at constant speed | E07.00 | The overvoltage stall suppression parameters are set improperly. | Ensure that the overvoltage stall suppression function (F3-23) is enabled.<br>The overvoltage stall suppression voltage (F3-22) is too high. Adjust it to a value between 700 V and 770 V.<br>The overvoltage stall suppression frequency gain (F3-24) is too low. Adjust it to a value between 30 and 50. | Axis fault |
| | | An external force drives the motor during running. | Cancel the external force or install a braking resistor.<br>The maximum rise frequency during overvoltage stall suppression (F3-26) is too low. Adjust it to a value between 5 Hz and 15 Hz when an external force is applied. | |
| | E07.01 | The bus voltage of the single-phase AC drive is too high. | Check whether the bus voltage of the single-phase AC drive exceeds 410.0 V. | Axis fault |
| Undervoltage | E09.00 | An instantaneous power failure occurs. | Enable the power dip ride-through function (F9-63). | Axis fault |
| | | The input voltage of the AC drive is beyond the specified range. | Adjust the input voltage of the AC drive to the normal range. | |
| | | The bus voltage is abnormal. | Contact the technical support personnel. | |
| | | The power supply unit, the drive board of the drive unit, or the control board of the drive unit is abnormal. | Contact the technical support personnel. | |
| AC drive overload | E10.00 | The load is too heavy or motor stalling occurs. | Reduce the load and check the motor and mechanical conditions. | Axis fault |
| | | The AC drive power rating is too low. | Replace the AC drive with one of higher power rating. | |
| | | The SVC control mode is adopted, and motor auto-tuning is not performed. | Set the motor parameters according to the motor nameplate and perform motor auto-tuning. | |
| | | The control mode is V/f control. | Reduce the torque boost (F3-01) reference in decrements of 1.0%, or set it to 0 (auto torque boost). | |
| Motor overload | E11.00 | F9-01 (motor overload protection gain) is set improperly. | Set F9-01 correctly. Increase its value to prolong the motor overload time. | Axis fault |
| | | The load is too heavy or motor stalling occurs. | Reduce the load and check the motor and mechanical conditions. | |

| Fault Name | Panel Display | Possible Cause | Solution | Fault Type |
|---|---|---|---|---|
| Input voltage exception | E12.01 | Input voltage phase loss | Check the three-phase power supply and make sure that it is normal.<br>Check the input cables and make sure that they are not broken.<br>Check the input terminals and make sure that they are properly connected. | Power supply unit fault |
| | E12.04 | The input three-phase voltage is too high. | Ensure that the input voltage does not exceed the rated value:<br>Three-phase 380 V models: 576 V<br>Single-phase 220 V models: 288 V | Power supply unit fault |
| Output phase loss | E13.00 | The motor is faulty. | Check the motor for open circuit. | Axis fault |
| | | The cable connecting the AC drive and the motor is abnormal. | Check the cable between the AC drive and the motor. | |
| | | The three-phase outputs of the AC drive are unbalanced when the motor is running. | Check whether the motor three-phase winding is normal. If not, eliminate the fault. | |
| | | The drive board or the IGBT is abnormal. | Contact the technical support personnel. | |
| IGBT overheat | E14.00 | The ambient temperature is too high. | Lower the ambient temperature. | Power supply unit fault |
| | | The air filter is blocked. | Clean the air filter. | |
| | | The fan is damaged. | Replace the fan. | |
| | | The thermistor of the IGBT is damaged. | Contact the technical support personnel. | |
| | | The IGBT is damaged. | Contact the technical support personnel. | |
| External device fault | E15.01 | An external fault signal is input through multi-functional DI (NO). | Eliminate the external fault, ensure that the mechanical condition allows restart (F8-21), and reset the operation. | Axis fault |
| | E15.02 | An external fault signal is input through the multi-functional DI (NC). | Eliminate the external fault, ensure that the mechanical condition allows restart (F8-21), and reset the operation. | Axis fault |

| Fault Name | Panel Display | Possible Cause | Solution | Fault Type |
|---|---|---|---|---|
| Communication fault | E16.01 | Modbus communication timeout | Check whether the Modbus master sends data within the set timeout period.<br>Check whether the RS485 circuit is disconnected or suffers interference. | Axis fault |
| | A16.02 | The protective cover for the connector is not installed. | Install the protective cover on the connector of the rightmost drive unit. | Axis fault |
| | E16.03 | Station number allocation fails. | Power on all equipment. If the fault persists, replace the AC drive. | Axis fault |
| | E16.04 | Continuous frame loss occurs on the extension card. | Ensure that the extension card is connected properly.<br>Check whether F9-67 is set too low. | Axis fault |
| | E16.11 | CANopen communication timeout | EtherCAT is disconnected. Make sure that the CAN communication cable is connected properly.<br>Check parameters Fd-15 to Fd-17 to eliminate possible interference. | Axis fault |
| | E16.12 | The PDO mapping configured by CANopen is inconsistent with the actual communication mapping. | The EtherCAT mapping is inconsistent with the PDO mapping. Check the PDO mapping parameters in group AF to make sure that the PDO configuration is correct. | Axis fault |
| | E16.13 | Data exchange from the power supply unit to the drive unit times out. | Check whether the power supply unit works properly. If the power supply unit is faulty, contact the technical support personnel. | Axis fault |
| | E16.14 | Data exchange from the power supply unit to the drive unit is abnormal. | The power supply unit is faulty. Contact the technical support personnel. | Axis fault |
| | E16.21 | CANlink heartbeat times out. | Check that the CAN communication cable is correctly connected.<br>Check parameters Fd-15 to Fd-17 to eliminate possible interference. | Axis fault |
| | E16.22 | A CANlink station number conflict occurs. | Change duplicate CAN station numbers in the network to different ones by using Fd-13. | Axis fault |
| | E16.52 | The EEPROM of the EtherCAT communication card is faulty. | 1. If the programming or upgrading of the communication card fails, program the communication card again.<br>2. If this fault occurs during normal use, replace the communication card. | Axis fault |
| | E16.53 | The slave control chip of the EtherCAT communication card is faulty. | 1. If the programming or upgrading of the communication card fails, program the communication card again.<br>2. If this fault occurs during normal use, replace the communication card. | Axis fault |
| | E16.55 | The EtherCAT system parameters are incorrect. | When the master station goes wrong, check whether it sends the sync frame (FD-78). If not, make sure that TPDO and RPDO have been configured for the master PDO. If the | Axis fault |

| Fault Name | Panel Display | Possible Cause | Solution | Fault Type |
|---|---|---|---|---|
| Motor auto-tuning fault | E19.02<br>E19.04 | Auto-tuning on the synchronous motor magnetic pole position angle fails. | Check whether the motor is disconnected or output phase loss occurs. | Axis fault |
| | E19.05 | Auto-tuning on the synchronous motor magnetic pole initial position angle fails. | Increase the synchronous motor initial position angle detection current (F2-29). | Axis fault |
| | E19.06<br>E19.07<br>E19.08 | Auto-tuning on the stator resistance fails. | Ensure that the motor is connected properly.<br>Ensure that the rated motor current (F1-03) is set according to the motor nameplate. | Axis fault |
| | E19.09<br>E19.10 | Auto-tuning on the asynchronous motor transient leakage inductance fails. | The motor is not connected or output phase loss occurs. Ensure that the motor is connected properly or the motor is disconnected from the load. | Axis fault |
| | E19.12 | The auto-tuning times out. | The motor is not connected or output phase loss occurs. Ensure that the motor is connected properly or the motor is disconnected from the load. | Axis fault |
| | E19.13 | | | Axis fault |
| | E19.14 | | | Axis fault |
| | E19.15 | | | Axis fault |
| | E19.16 | | | Axis fault |
| | E19.17 | | | Axis fault |
| | E19.19 | | | Axis fault |
| | E19.20 | Auto-tuning on the zero position angle of the no-load synchronous motor times out. | Check the Z feedback signal. | Axis fault |
| | E19.22 | | | Axis fault |
| | E19.23 | Auto-tuning on the synchronous motor pole position fails. | Ensure that the rated motor current (F1-03) is set according to the motor nameplate.<br>Decrease the synchronous motor initial position angle detection current (F2-29). | Axis fault |
| | E19.24 | Auto-tuning on the asynchronous motor transient leakage inductance fails. | The AC drive power rating is too low.<br>Select an AC drive of proper power rating according to the motor power. | Axis fault |
| EEPROM read-write fault | E21.01 | EEPROM read-write is abnormal. | For parameters written to EEPROM through communication, check the RAM addresses of the parameters. For the RAM address mapping of parameters, see "Parameter Address Rules".<br>If the EEPROM chip is damaged, contact the manufacturer to replace the main control board. | Axis fault |
| | E21.02 | | | Axis fault |
| | E21.03 | | | Axis fault |
| | E21.04 | | | Axis fault |

| Fault Name | Panel Display | Possible Cause | Solution | Fault Type |
|---|---|---|---|---|
| Motor auto-tuning error | E22.00 | The stator resistance obtained through auto-tuning exceeds the allowed range. | Check whether the rated motor voltage and current are correctly set, and set F1-02 (rated motor voltage) and F1-03 (rated motor current) according to the motor nameplate.<br>Perform auto-tuning after the motor stops. | Axis fault |
| | E22.01 | The rotor resistance of the asynchronous motor obtained through auto-tuning exceeds the allowed range. | | Axis fault |
| | E22.02 | The no-load current and mutual inductance of the asynchronous motor obtained through auto-tuning exceed the allowed range. If such an alarm is generated, the AC drive calculates no-load current and mutual inductance based on known parameters, which may be different from the optimal values. | Set motor parameters in group F1 according to the motor nameplate.<br>Before auto-tuning, ensure that the motor has no load. | Axis fault |
| | E22.03 | The back EMF of the synchronous motor obtained through auto-tuning exceeds the allowed range. | Ensure that the rated motor voltage (F1-02) is set according to the motor nameplate.<br>Before auto-tuning, ensure that the motor has no load. | Axis fault |

| Fault Name | Panel Display | Possible Cause | Solution | Fault Type |
|---|---|---|---|---|
| Short circuit to ground | E23.00 | The motor is short circuited to the ground. | Check the motor cables and motor for short circuit to ground. | Axis fault |
| | E23.01 | A hardware overcurrent fault occurs during short-to-ground detection upon power-on. | | |
| | E23.02 | A hardware overvoltage fault occurs during short-to-ground detection upon power-on. | | |
| | E23.03 | A great risk is detected during short-to-ground detection upon power-on. | | |
| | E23.04 | A lower bridge overcurrent fault occurs during short-to-ground detection before startup. | | |
| | E23.05 | A bus overcurrent fault occurs during short-to-ground detection before startup. | | |
| | E23.06 | A lower bridge and bus overcurrent fault occurs during short-to-ground detection before startup. | | |
| Power supply unit fault | E25.00 | The power supply unit is faulty. | Eliminate the power supply unit faults, such as input phase loss and overtemperature.<br>Check the terminal configuration of the power supply unit. If any one of the following functions is selected, a fault is reported when there is no feedback signal:<br>1: Operation enable<br>2: Incoming circuit breaker feedback<br>3: Auxiliary circuit breaker feedback<br>4: Residual current device feedback<br>If any one of the following functions is selected, a fault is reported when the terminal is active:<br>6: Drive unit running prohibited<br>7: Drive unit coast-to-stop<br>8: Drive unit stop according to the preset mode | Axis fault |

| Fault Name | Panel Display | Possible Cause | Solution | Fault Type |
|---|---|---|---|---|
| Accumulative running time reach | E26.00 | The accumulative running time reaches the reference. | Clear the record through parameter initialization. | Axis fault |
| User-defined fault 1 | E27.00 | The signal of user-defined fault 1 is input through the multi-functional DI terminal. The signal of user-defined fault 1 is input through virtual I/O. | Reset. | Axis fault |
| User-defined fault 2 | E28.00 | The signal of user-defined fault 2 is input through the multi-functional DI terminal. The signal of user-defined fault 2 is input through virtual I/O. | Reset. | Axis fault |
| Accumulative power-on time reach | E29.00 | The accumulative power-on time reaches the reference. | Clear the record through parameter initialization. | Axis fault |
| Load loss | E30.00 | The running current of the AC drive is lower than that set by F9-68. | Check whether the load is disconnected or the setting of F9-68 and F9-69 satisfies actual running conditions. | Axis fault |
| PID feedback loss during running | E31.00 | The PID feedback is lower than that set by FA-26. | Check the PID feedback signal or set FA-26 properly. | Axis fault |
| Local parameter backup failure | E32.00 | An exception occurs during local parameter backup. | Check whether the backed-up drive unit station numbers exceeds the quantity of drive units installed. | Power supply unit fault |
| Excessive speed deviation | E42.00 | Motor auto-tuning is not performed. | Perform motor auto-tuning. | Axis fault |
| | | F9-73 and F9-74 are set incorrectly. | Set F9-73 and F9-74 correctly based on actual conditions. | Axis fault |
| Motor overtemperature | E45.00 | The temperature sensor is connected loosely. | Check the temperature sensor connection. Re-connect the temperature sensor if necessary. | Axis fault |
| | | The motor temperature is too high. | Increase the carrier frequency or take other heat dissipation measures to cool the motor. | Axis fault |
| | | The motor overtemperature protection thresholds (F9-57, F9-59, and F9-61) are too low. | Increase the motor overtemperature protection thresholds (90°C to 100°C for common motors). | Axis fault |

| Fault Name | Panel Display | Possible Cause | Solution | Fault Type |
|---|---|---|---|---|
| STO fault | STO | STO1 and STO2 signals are disconnected simultaneously. | Check the wiring of STO1 and STO2. | Axis fault |
| | E47.02 | STO1 and STO2 signals are disconnected separately. | Check the wiring of STO1 and STO2. | Axis fault |
| | E47.03 | Undervoltage or overvoltage occurs on the STO circuit. | Contact the technical support personnel. | Axis fault |
| | E47.04 | The STO circuit input subsystem is abnormal. | Contact the technical support personnel. | Axis fault |
| | E47.05 | The STO blocking output chip is abnormal. | Contact the technical support personnel. | Axis fault |
| Braking unit fault | E61.01 | The braking transistor is short-circuited at stop. | Check whether the resistance and power of the braking resistor are too low.<br>Check whether the braking resistor is short-circuited. | Power supply unit fault |
| | E61.02 | Braking transistor open circuit occurs. | Contact the technical support personnel. | Power supply unit fault |
| | E61.03 | The braking transistor is short-circuited during running. | Check whether the resistance and power of the braking resistor are too low.<br>Check whether the braking resistor is short-circuited. | Power supply unit fault |
| Fan fault | E80.00 | The fan is faulty. | Ensure that the fan on the drive unit is connected properly.<br>Ensure that the fan rotates freely. | Axis fault |

| Fault Name | Panel Display | Possible Cause | Solution | Fault Type |
|---|---|---|---|---|
| Hardware I/O resource loss | A99.01 | The selected DI hardware resource does not exist. | Ensure that the power supply unit and extension cards are firmly installed.<br>Check parameters F4-00 to F4-15 of the drive unit to ensure that no non-existing DI hardware resource is selected. | Axis fault |
| | A99.02 | The selected DO/RO hardware resource does not exist. | Ensure that the power supply unit and extension cards are firmly installed.<br>Check the DO/RO hardware resources of the drive unit to ensure that no non-existing DO/RO hardware resource is selected. | Axis fault |
| | A99.03 | The selected AI hardware resource does not exist. | Ensure that the power supply unit and extension cards are firmly installed.<br>Check parameters F4-25 to F4-29 of the drive unit to ensure that no non-existing AI hardware resource is selected. | Axis fault |
| | A99.04 | The selected DI and DO/RO hardware resources do not exist. | Ensure that the power supply unit and extension cards are firmly installed.<br>Check the drive unit according to the solutions to A99.01 and A99.02. | Axis fault |
| | A99.05 | The selected DI and AI hardware resources do not exist. | Ensure that the power supply unit and extension cards are firmly installed.<br>Check the drive units according to the troubleshooting measures for A99.01 and A99.03. | Axis fault |
| | A99.06 | The selected DO/RO and AI hardware resources do not exist. | Ensure that the power supply unit and extension cards are firmly installed.<br>Check the drive units according to the troubleshooting measures for A99.02 and A99.03. | Axis fault |
| | A99.07 | The selected DI, DO/RO, and AI hardware resources do not exist. | Ensure that the power supply unit and extension cards are firmly installed.<br>Check the drive unit according to the solutions to A99.01, A99.02, and A99.03. | Axis fault |

**Shenzhen Inovance Technology Co., Ltd.**
Add.: Building E, Hongwei Industry Park, Liuxian Road, Baocheng No. 70 Zone, Bao'an District, Shenzhen
Tel: +86-755-2979 9595
Fax: +86-755-2961 9897
http://www.inovance.com

**Suzhou Inovance Technology Co., Ltd.**
Add.: No. 16 Youxiang Road, Yuexi Town, Wuzhong District, Suzhou 215104, P.R. China
Tel: +86-755-2979 6666
Fax: +86-755-2961 6720
http://www.inovance.com

19011495A00

Copyright©Shenzhen Inovance Technology Co., Ltd.