INOVANCE

FORWARD, ALWAYS PROGRESSING

MD800 Series
AC Drive (Multidrive System)

Quick Installation and Commissioning Guide

Industrial Automation

Intelligent Elevator

New Energy Vehicle

Industrial Robot

Rail Transit

Data code 19011494 A04

Preface

About This Guide

The MD800 series is a new generation of standard AC drive (multidrive system) designed for low-power multidrive applications in the traditional original equipment manufacturer (OEM) industry. It is widely applied in industries such as printing and packaging, woodworking machine tools, food and beverage, logistics and storage, textile printing and dyeing, and fans and water pumps.

This document describes the installation, wiring, quick commissioning, commissioning parameters, and commissioning troubleshooting of the product.

More Documents

Data Name	Description
MD800 Series AC Drive (Multidrive System) Quick Installation and Commissioning Guide	Describes the installation, wiring, quick commissioning, commissioning parameters, and commissioning troubleshooting of the product.
MD800 Series AC Drive (Multidrive System) Design and Selection Guide	Describes the system composition, technical specifications, dimensions, detailed specifications and selection of options (installation accessories, cables, and peripheral electrical components), common EMC problems and solutions, and compliant certifications and standards.
MD800 Series AC Drive (Multidrive System) Maintenance Guide	Describes the routine product maintenance, component replacement, and troubleshooting.
MD800 Series AC Drive (Multidrive System) Function Guide	Describes the software tools, system commissioning procedures, parameters, fault codes, and product functions and applications.
MD800 Series AC Drive (Multidrive System) Communication Guide	Describes the communication mode, communication networking, and communication configuration of the product.

Revision History

Date	Version	Description
September 2022	A04	Updated the following sections: • 1.1 Unpacking check • 4.6 List of Drive Unit Parameters • 4.7 List of Fault Codes • Front cover and back cover • Preface • Fundamental Safety Precautions
April 2022	A03	Updated the installation environment and the list of drive unit parameters
August 2021	A02	Updated the fault code and commissioning parameter

Date	Version	Description
July 2021	A01	Updated the data code and version.
March 2021	A00	First release

How to Obtain

This guide is not delivered with the product. You can obtain the PDF version by the following method:

Log in to Inovance's website (*http://en.inovance.cn/*), choose **Support** > **Download**, search by keyword, and then download the PDF file.

Table of Contents

Preface 1
Fundamental Safety Instructions 4
1 Unpacking and Transportation 10
1.1 Unpacking Check 10
1.2 Transportation Requirements 11
1.3 Storage Requirements 11
2 Pre-installation Preparations 12
2.1 Installation Procedure 12
2.2 Installation Environment 13
2.3 Installation Tool Preparations 15
2.3.1 Mechanical Installation Tools 15
2.3.2 Cables 16
2.3.3 Accessory Kit 17
3 Installation and Wiring 18
3.1 Mechanical Installation 18
3.1.1 Installing the Power Supply Unit 18
3.1.2 Installing the Drive Unit 19
3.1.3 Installing the Option 20
3.1.3.1 Expansion Card 20
3.1.3.2 Filter Unit 21
3.2 Electrical Installation 23
3.2.1 Inspection Before Wiring 23
3.2.2 Wiring 23
3.2.3 Wiring with EMC Shielded Brackets (Optional) 27
3.2.4 Inspection After Wiring 31
3.2.5 System Grounding 32
4 Commissioning and Trial Operation 34
4.1 Basic Commissioning Procedure 34
4.2 Commissioning Procedure Under V/f Control 35
4.3 Commissioning Procedure Under SVC 36
4.4 Commissioning Procedure Under PMVVC 37
4.5 Parameter List for the Power Supply Unit 38
4.6 Parameter List for the Drive Unit 65
4.7 List of Fault Codes 116
Appendix Electrical Wiring Diagram 130

Fundamental Safety Instructions

Safety Precautions

- This chapter presents essential safety instructions for a proper use of the equipment. Before operating the equipment, read through the guide and comprehend all the safety instructions. Failure to comply with the safety instructions may result in death, severe personal injuries, or equipment damage.
- "CAUTION", "WARNING", and "DANGER" items in the user guide only indicate some of the precautions that need to be followed; they just supplement the safety precautions.
- Use this equipment according to the designated environment requirements. Damage caused by improper use is not covered by warranty.
- Inovance shall take no responsibility for any personal injuries or property damage caused by improper use.

Safety Levels and Definitions

DANGER Indicates that failure to comply with the notice will result in death or severe personal injuries.

WARNING Indicates that failure to comply with the notice may result in death or severe personal injuries.

CAUTION Indicates that failure to comply with the notice may result in minor or moderate personal injuries or equipment damage.

General Safety Instructions

- Drawings in the guide are sometimes shown without covers or protective guards. Remember to install the covers or protective guards as specified first, and then perform operations in accordance with the instructions.
- The drawings in the guide are shown for illustration only and may be different from the product you purchased.

Unpacking
WARNING • Do not install the equipment if you find damage, rust, or signs of use on the equipment or accessories upon unpacking. • Do not install the equipment if you find water seepage or missing or damaged components upon unpacking. • Do not install the equipment if you find the packing list does not conform to the equipment you received.

CAUTION

- Check whether the packing is intact and whether there is damage, water seepage, dampness, and deformation before unpacking.
- Unpack the package by following the unpacking sequence. Do not strike the package violently.
- Check whether there is damage, rust, or injuries on the surface of the equipment and equipment accessories before unpacking.
- Check whether the package contents are consistent with the packing list before unpacking.

Storage and Transportation

WARNING

- Large-scale or heavy equipment must be transported by qualified professionals using specialized hoisting equipment. Failure to comply may result in personal injuries or equipment damage.
- Before hoisting the equipment, ensure the equipment components such as the front cover and terminal blocks are secured firmly with screws. Loosely-connected components may fall off and result in personal injuries or equipment damage.
- Never stand or stay below the equipment when the equipment is being hoisted by the hoisting equipment.
- When hoisting the equipment with a steel rope, ensure the equipment is hoisted at a constant speed without suffering from vibration or shock. Do not turn the equipment over or let the equipment stay hanging in the air. Failure to comply may result in personal injuries or equipment damage.

CAUTION

- Handle the equipment with care during transportation and mind your steps to prevent personal injuries or equipment damage.
- When carrying the equipment with bare hands, hold the equipment casing firmly with care to prevent parts from falling. Failure to comply may result in personal injuries.
- Store and transport the equipment based on the storage and transportation requirements. Failure to comply will result in equipment damage.
- Avoid storing or transporting the equipment in environments with water splash, rain, direct sunlight, strong electric field, strong magnetic field, and strong vibration.
- Avoid storing the equipment for more than three months. Long-term storage requires stricter protection and necessary inspections.
- Pack the equipment strictly before transportation. Use a sealed box for long-distance transportation.
- Never transport the equipment with other equipment or materials that may harm or have negative impacts on this equipment.

Installation

DANGER

- The equipment must be operated only by professionals with electrical knowledge. Operations by non-professional personnel are strictly prohibited.

WARNING

- Read through the guide and safety instructions before installation.
- Do not install this equipment in places with strong electric or magnetic fields.
- Before installation, check that the mechanical strength of the installation site can bear the weight of the equipment. Failure to comply will result in mechanical hazards.
- Do not wear loose clothes or accessories during installation. Failure to comply may result in an electric shock.
- When installing the equipment in a closed environment (such as a cabinet or casing), use a cooling device (such as a fan or air conditioner) to cool the environment down to the required temperature. Failure to comply may result in equipment over-temperature or a fire.
- Do not retrofit the equipment.
- Do not fiddle with the bolts used to fix equipment components or the bolts marked in red.
- When the equipment is installed in a cabinet or final assembly, a fireproof enclosure providing both electrical and mechanical protections must be provided. The IP rating must meet IEC standards and local laws and regulations.
- Before installing devices with strong electromagnetic interference, such as a transformer, install a shielding device for the equipment to prevent malfunction.
- Install the equipment onto an incombustible object such as a metal. Keep the equipment away from combustible objects. Failure to comply will result in a fire.

CAUTION

- Cover the top of the equipment with a piece of cloth or paper during installation. This is to prevent unwanted objects such as metal chippings, oil, and water from falling into the equipment and causing faults. After installation, remove the cloth or paper on the top of the equipment to prevent over-temperature caused by poor ventilation due to blocked ventilation holes.
- Resonance may occur when the equipment operating at a constant speed executes variable speed operations. In this case, install the vibration-proof rubber under the motor frame or use the vibration suppression function to reduce resonance.

Wiring

DANGER

- Equipment installation, wiring, maintenance, inspection, or parts replacement must be performed only by professionals.
- Before wiring, cut off all the power supplies of the equipment, and wait for at least the time designated on the equipment warning label before further operations because residual voltage still exists after power-off. After waiting for the designated time, measure the DC voltage in the main circuit to ensure the DC voltage is within the safe voltage range. Failure to comply will result in an electric shock.
- Do not perform wiring, remove the equipment cover, or touch the circuit board with power ON. Failure to comply will result in an electric shock.
- Check that the equipment is grounded properly. Failure to comply will result in an electric shock.

WARNING

- Do not connect the input power supply to the output end of the equipment. Failure to comply will result in equipment damage or even a fire.
- When connecting a drive to the motor, check that the phase sequences of the drive and motor terminals are consistent to prevent reverse motor rotation.
- Cables used for wiring must meet cross sectional area and shielding requirements. The shield of the cable must be reliably grounded at one end.
- Fix the terminal screws with the tightening torque specified in the user guide. Improper tightening torque may overheat or damage the connecting part, resulting in a fire.
- After wiring is done, check that all cables are connected properly and no screws, washers or exposed cables are left inside the equipment. Failure to comply may result in an electric shock or equipment damage.

CAUTION

- During wiring, follow the proper electrostatic discharge (ESD) procedure, and wear an antistatic wrist strap. Failure to comply will damage the equipment or the internal circuits of the equipment.
- Use shielded twisted pairs for the control circuit. Connect the shield to the grounding terminal of the equipment for grounding purpose. Failure to comply will result in equipment malfunction.

Power-on

DANGER

- Before power-on, check that the equipment is installed properly with reliable wiring and the motor can be restarted.
- Check that the power supply meets equipment requirements before power-on to prevent equipment damage or a fire.
- After power-on, do not open the cabinet door or protective cover of the equipment, touch any terminal, or disassemble any unit or component of the equipment. Failure to comply will result in an electric shock.

WARNING

- Perform a trial run after wiring and parameter setting to ensure the equipment operates safely. Failure to comply may result in personal injuries or equipment damage.
- Before power-on, check that the rated voltage of the equipment is consistent with that of the power supply. Failure to comply may result in a fire.
- Before power-on, check that no one is near the equipment, motor, or machine. Failure to comply may result in death or personal injuries.

Operation

DANGER

- The equipment must be operated only by professionals. Failure to comply will result in death or personal injuries.
- Do not touch any connecting terminals or disassemble any unit or component of the equipment during operation. Failure to comply will result in an electric shock.

WARNING

- Do not touch the equipment casing, fan, or resistor with bare hands to feel the temperature. Failure to comply may result in personal injuries.
- Prevent metal or other objects from falling into the equipment during operation. Failure to comply may result in a fire or equipment damage.

Maintenance

DANGER

- Equipment installation, wiring, maintenance, inspection, or parts replacement must be performed only by professionals.
- Do not maintain the equipment with power ON. Failure to comply will result in an electric shock.
- Before maintenance, cut off all the power supplies of the equipment and wait for at least the time designated on the equipment warning label.
- In case of a permanent magnet motor, do not touch the motor terminals immediately after power-off because the motor terminals will generate induced voltage during rotation even after the equipment power supply is off. Failure to comply will result in an electric shock.

WARNING

- Perform routine and periodic inspection and maintenance on the equipment according to maintenance requirements and keep a maintenance record.

Repair

DANGER

- Equipment installation, wiring, maintenance, inspection, or parts replacement must be performed only by professionals.
- Do not repair the equipment with power ON. Failure to comply will result in an electric shock.
- Before inspection and repair, cut off all the power supplies of the equipment and wait for at least the time designated on the equipment warning label.

WARNING

- When the fuse is blown or the circuit breaker or earth leakage current breaker (ELCB) trips, wait for at least the time designated on the equipment warning label before power-on or further operations. Failure to comply may result in death, personal injuries or equipment damage.
-
- When the equipment is faulty or damaged, the troubleshooting and repair work must be performed by professionals that follow the repair instructions, with repair records kept properly.
- Replace quick-wear parts of the equipment according to the replacement instructions.
- Do not use damaged equipment. Failure to comply may result in death, personal injuries, or severe equipment damage.
- After the equipment is replaced, check the wiring and set parameters again.

Disposal
WARNING • Dispose of retired equipment in accordance with local regulations and standards. Failure to comply may result in property damage, personal injuries, or even death. • Recycle retired equipment by observing industry waste disposal standards to avoid environmental pollution.

Safety Signs

For safe equipment operation and maintenance, comply with the safety labels on the equipment. Do not damage or remove the safety labels. See the following table for descriptions of the safety labels.

Safety Signs	Description
	• Read through the safety instructions before operating the equipment. Failure to comply may result in death, personal injuries, or equipment damage. • Do not touch the terminals or remove the cover with power ON or within 10 min after power-off. Failure to comply will result in an electric shock.

1 Unpacking and Transportation

1.1 Unpacking Check

When receiving goods from the shipping company, check that you have received all the items specified on the delivery note. Notify the shipping company immediately of any missing components or damage. If necessary, seek support from the Inovance office or your local agent.

After unpacking, check the item lists carefully and confirm that the terminals of the drive unit have been locked firmly to prevent them from falling off during transportation.

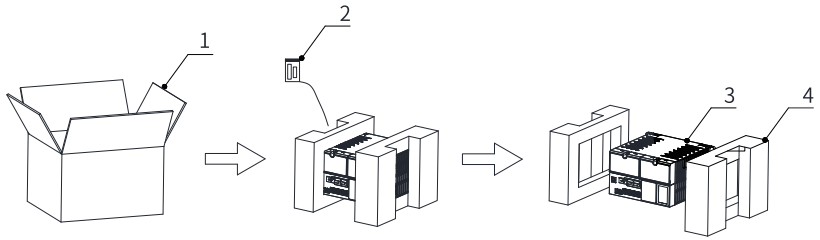

1. Carton; 2. Accessory kit; 3. Power supply unit; 4. Expanded polyethylene (EPE)

Figure 1-1 Item list for the power supply unit

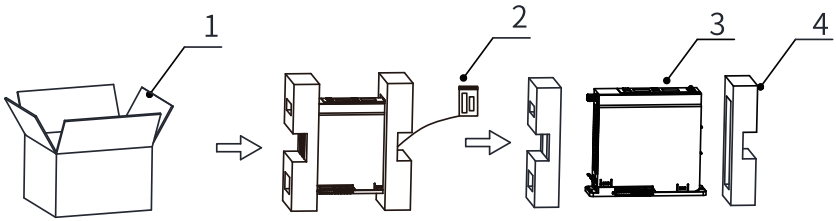

1. Carton; 2. Accessory kit; 3. Drive unit; 4. EPE

Figure 1-2 Item list for the drive unit

Caution

If the equipment is damaged during transportation, its electrical safety can no longer be ensured. Do not connect the equipment until a thorough high-voltage test has been performed.

1.2 Transportation Requirements

Due to the small size and light weight, you can manually transport the drive. Handle the drive with care. Do not throw or drag the drive or step on its package.

Cartons are used for transportation. When packing and transporting the drive, ensure that the stacking height is no higher than 1.8 m.

1.3 Storage Requirements

Requirements for storage with package:

- When the drive is placed near the wall, reserve the clearance of at least 200 mm between the drive and the wall.
- Never occupy the fire exit and block the emergency exit when storing the drive.
- Reserve a passage with the width of about 1 meter in front of the fire hydrant, and do not place the drive within one meter in front of the power distribution cabinet.
- When the drive packed in a carton is stored outdoors, place the carton on a pallet and fully cover it with rain-proof cloth.
- The drive that has been stored for more than 24 hours or underwent severe weather must pass the risk assessment by relevant departments before transshipment and delivery.
- Store the drive with care. Never throw it, drag it on the ground, or step on the package and operate it.
- During storage, place the large and heavy drive at the bottom. The total stack height cannot exceed 1.8 m.
- Place the drive delivered with the pallet within the pallet. When there are more than two stacking layers and the overlapping mode is used, fix the drive with the stretch film. Do not use the box-sealing tape to fix the drive.

Requirements for storage without package:

- Store the drive in a clean and dry room, with temperatures between -40°C and +70°C and temperature variations smaller than 1°C/min.
- If the drive is stored for a prolonged period once it has been unpacked, cover it or take other appropriate measures to keep it from contamination and environmental influences.
- To store the drive, pack it with the original packing box provided by Inovance.
- Do not expose the drive to the environment with moisture or high temperature, or place it outdoors in direct sunlight for an extended period.
- If the drive is not switched on for more than one year, repair the electrolytic capacitor before powering on the drive. Otherwise, the electrolytic capacitor might be damaged. For the operations of repairing the electrolytic capacitor, see chapter "Storage and Warranty" in the *MD800 AC Drive (Multidrive System) Maintenance and Repair Guide*.

2 Pre-installation Preparations

2.1 Installation Procedure

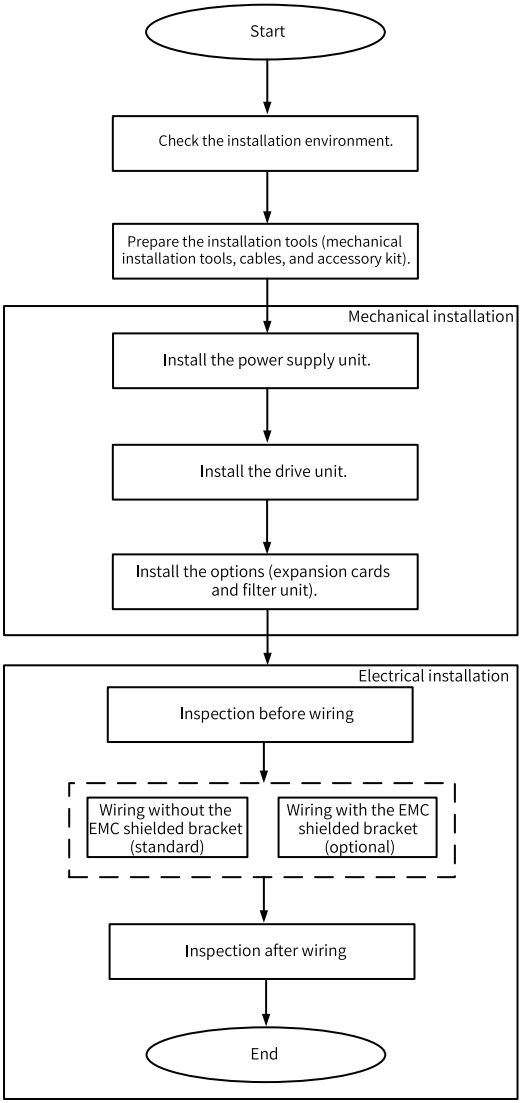

Figure 2-1 Installation flowchart

2.2 Installation Environment

To maximum the product performance and ensure long-term use, install the drive in an environment meeting the following requirements.

Table 2–1 Installation environment requirements

Item	Requirement
Installation location	Indoor
Grid overvoltage	Overvoltage category (OVC) III
Temperature	Installation/Operating temperature: • Applications without overload: ▪ -20°C to +50°C: derating not required ▪ 50°C < temperature ⩽ 60°C: derated by 2.5% for every additional 1°C ▪ > 60°C: not recommended for use • Applications with overload: ▪ -20°C to +40°C: derating not required ▪ 40°C < temperature ⩽ 60°C: derated by 2.5% for every additional 1°C ▪ > 60°C: not recommended for use Storage/Transportation temperature: -40°C to +70°C (no freezing) • To improve the reliability of the drive, use it in places without sharp temperature change. • When installing the drive in an enclosed cabinet, use the cooling fan or air conditioner to keep the incoming air temperature below 50°C. Failure to comply will result in over-temperature of the drive or even fire. • Install the drive on a flame-retardant surface, and reserve sufficient space around it for efficient heat dissipation. • Avoid freezing the drive.
Relative humidity	• Operating relative humidity: 5% to 95% • Storage relative humidity: 5% to 95% • Transportation relative humidity: Lower than 95% at +40°C
Environment	Pollution degree (PD): PD2 or below Install the drive in a location that meets the following descriptions. • Install the drive in a place free of direct sunlight, dust, corrosive gas, combustible or explosive gas, oil mist, water vapor, drip, or salt.

Item	Requirement
	• Install the drive in a place away from vibration. Keep the drive away from equipment such as punch presses. • Do not install any device generating electromagnetic waves or interference, such as transformers, around the drive. If such a device is required, install a shielding plate between the device and the drive. Otherwise, the drive will malfunction. • The drive serves as a part of a final system. Install the drive as the system component in a fireproof cabinet that provides effective electrical and mechanical protection, and install it in accordance with local laws and regulations and relevant IEC standards.
Maximum altitude	Star power grid: 4000 m (13123 ft) Delta power grid: 2000 m (6562 ft) • ≤ 1000 m (3281 ft): derating not required • > 1000 m (3281 ft): derated by 1% for every additional 100 m (328.1 ft)
Vibration	< 4.9 m/s^2 • For transportation in the package: compliant with class 2M3 in EN 60721-3-2 • For installation with the package removed: compliant with ISTA 1H • For operation in specific scenarios: compliant with class 3M4 in IEC 60721-3-3
Dust	Compliant with class 3S2 in IEC60721-3 (non-conductive dust)
Chemically active substance	Compliant with class 3C3 in IEC60721-3
Shock	< 19.6 m/s^2
IP rating	IP40 (excluding terminals and fans)

2.3 Installation Tool Preparations

2.3.1 Mechanical Installation Tools

Table 2–2 Mechanical installation tools

Tool	Description	Diagram
Electric drill and drilling bit	Used to drill the mounting holes on the mounting surface during mechanical installation.	
Phillips-head and straight (2.5 mm) screwdrivers	Used to tighten or loosen the screws during mechanical installation.	
Tape measure	Used to measure the mounting dimensions of the AC drive during installation.	
Gloves	Used to prevent static electricity during mechanical installation.	
M4x12 cross recessed pan head SEMS screws (with flat washer and spring washer)	Power supply unit: 4 PCS per unit Drive unit: 2 PCS per unit Filter unit: 2 PCS per unit	-

Tool	Description	Diagram
Wiring tool (standard for the power supply unit)	Used to crimp the cables to terminals. The wiring tool is marked with two current types. 55 A corresponds to the input terminals of the power supply unit, and 30 A corresponds to the output terminals of the drive unit and braking terminals.	
EMC shielded brackets (optional)	The EMC shielded brackets are optional. The bracket for the power supply unit is installed on the input side of the power supply unit, and the bracket for the drive unit is installed on the output side of the drive unit.	EMC shielded bracket for the power supply unit EMC shielded bracket for the drive unit

2.3.2 Cables

Table 2–3 Cables

Category	Cable Name	Diagram	Category	Cable Name	Diagram
Main circuit cable	Power cable		Control circuit cable	Signal cable	

Category	Cable Name	Diagram	Category	Cable Name	Diagram
	Grounding cable			LAN cable	

2.3.3 Accessory Kit

Table 2–4 Items in the accessory kit

Name	Diagram	Quantity	Name	Diagram	Quantity	Name	Diagram	Quantity
Input terminal		1	Relay output terminal (CN2)		1	Braking output terminal (BR/+) (applies to models with an optional braking unit)		1
Signal terminal (CN1)		1	External 24 V power input terminal (CN6)		1	Wiring tool (standard for the power supply unit)		1

3 Installation and Wiring

3.1 Mechanical Installation

3.1.1 Installing the Power Supply Unit

Procedure

1. Remove the protective cover on the right side of the power supply unit.

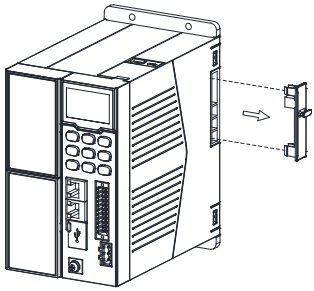

Note

Keep the removed protective cover. It needs to be installed to the rightmost drive unit.

---

2. Tighten the four M4x12 screws at the upper and lower ends of the power supply unit to secure the unit to the sheet metal mounting plate.

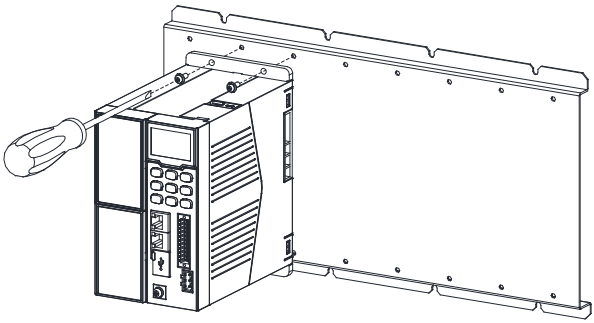

Caution

All retaining nuts must be tightened. Otherwise, the power supply unit may fall off or be damaged due to the unbalanced effect on the fixed part during long-time running.

3.1.2 Installing the Drive Unit

Procedure

1. Align the connector on the left side of the drive unit with the connector on the right side of the power supply unit, and insert the drive unit.

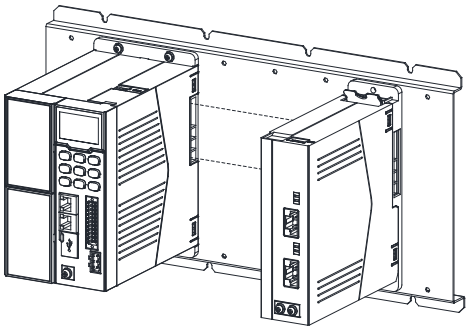

2. Tighten the two M4x12 screws at the upper and lower ends of the drive unit to secure the unit to the sheet metal mounting plate.

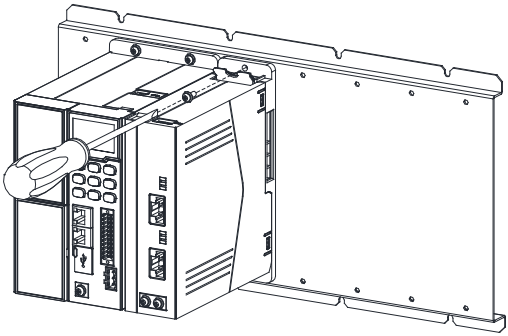

Caution

All retaining nuts must be tightened. Otherwise, the drive unit may fall off or be damaged due to the unbalanced effect on the fixed part during long-time running.

3. Secure all the drive units to the sheet metal mounting plate one by one by repeating Steps 1 and 2.

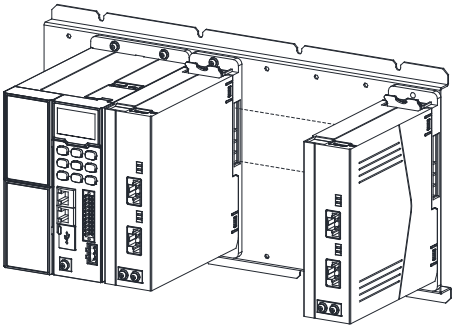

4. After all drive units are installed, reinstall the removed protective cover on the connector of the rightmost drive unit.

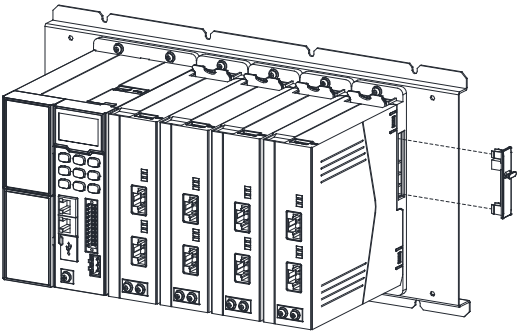

3.1.3 Installing the Option

3.1.3.1 Expansion Card

Procedure

1. Insert a straight screwdriver into the concaved slot beside the expansion card box and lever the box out towards left.

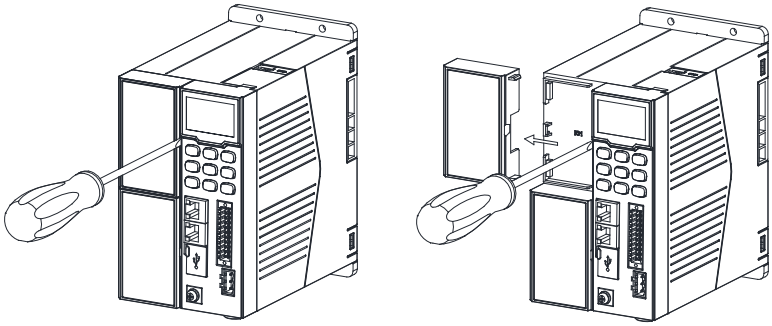

2. Align the optional expansion card with the slot and push it gently from left to right until it is in position.

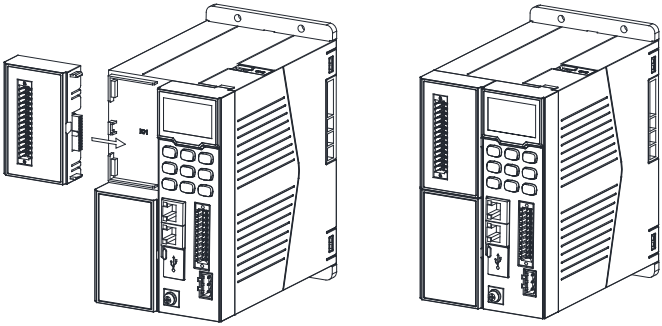

3.1.3.2 Filter Unit

Procedure

1. Secure the filter unit to the left side of the power supply unit using two M4x12 screws.

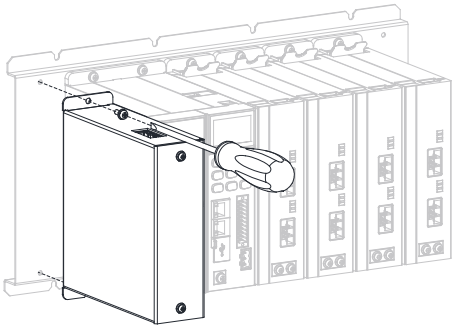

2. Fix the input and output grounding terminals of the filter unit using M4x10 screws (provided for the AC drive).

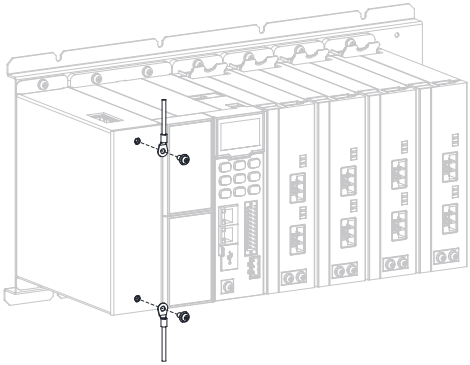

3. Insert the input and output terminals of the filter unit in turn.
   One end of the output cable of the filter unit is connected to the output terminal of the filter unit, and the other end is connected to the input terminal of the drive unit.

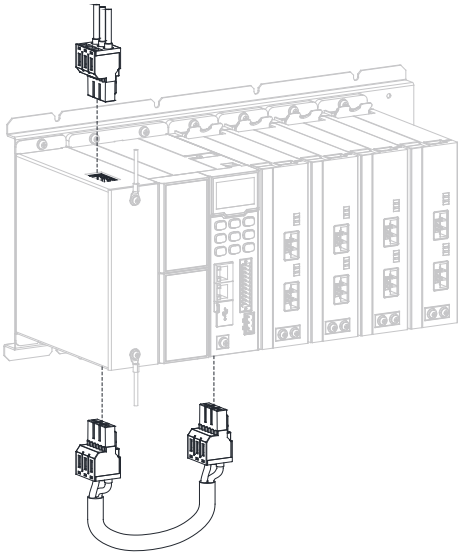

3.2 Electrical Installation

3.2.1 Inspection Before Wiring

- Never perform wiring when the power is on, and keep all circuit breakers OFF. Failure to comply will result in an electric shock.
- After disconnecting the power supplies on the input and output sides, wait for at least the time designated on the product warning label before further operations (such as wiring).
- The user is responsible for ensuring that the motor, cabinet units, and other components are installed and connected in accordance with the recognized technical rules in the country of installation and with other applicable regional regulations. Special attention must be paid to cable dimensions, fuses, grounding, disconnection, isolation, and overcurrent protection.
- If an item of protective gear trips in a branch circuit, a leakage current may have been disconnected. To reduce the risk of fire or an electric shock, you must inspect the current-carrying parts and other components in the AC drive and replace the damaged parts. When an item of protective gear trips, the cause of the trip must be identified and rectified.

3.2.2 Wiring

Procedure

1. Secure the grounding cables to grounding terminals using M4x10 screws.

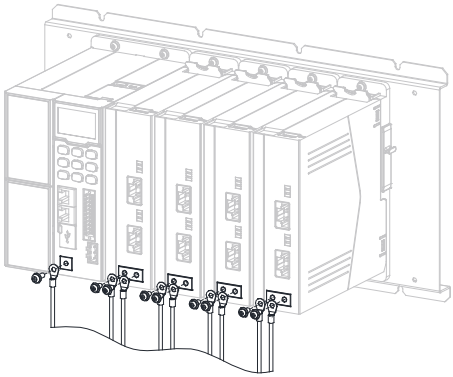

2. Crimp the cables to terminals.
   Press the wiring tool (shown as the arrow in the following figure) to open the spring clamp of the terminal, and insert the crimped cable into the round hole.

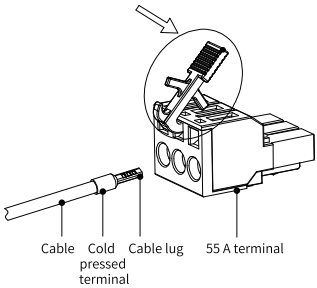

The wiring is as follows.

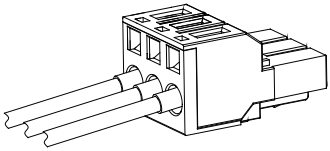

Note

- The wiring tool is required for connecting the power supply unit input terminal and drive unit output terminals. The thick side of the tool is used for the power supply unit and the thin side is used for the drive unit.
- The signal terminal, relay output terminal, external 24 V power input terminal, and safe torque off (STO) terminal can be directly plugged in.

3. Insert the input terminal into the power supply unit.

Note

For models with an optional braking unit, the braking output terminal must be inserted.

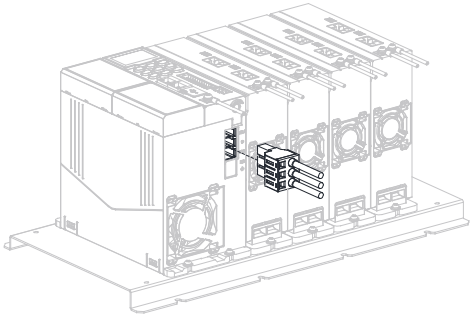

4. Insert the output terminals into the drive unit.

Note

For models with an optional STO terminal, the STO terminal must be inserted.

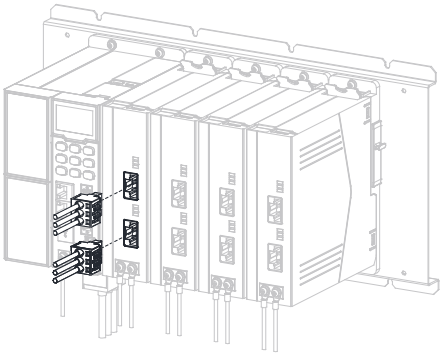

5. Insert the control terminal, relay terminal, and 24V power input terminal into the power supply unit.

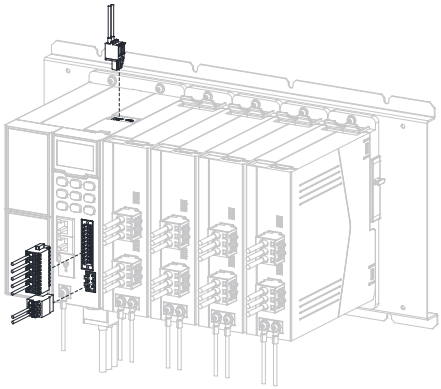

Caution

After completing the wiring, snap the wiring tool onto the drive unit output terminal, as shown in the following figure.

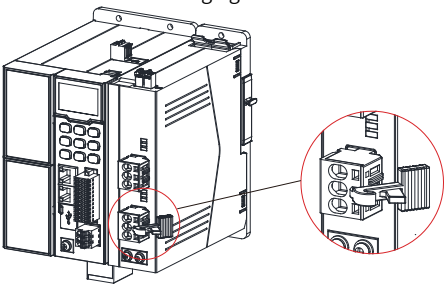

3.2.3 Wiring with EMC Shielded Brackets (Optional)

If optional EMC shielded brackets are required, the cables used must be multi-core shielded cables and be crimped according to the following requirements.

Procedure

1. Connecting the power supply unit
   a. Remove the M4x10 grounding screw from the power supply unit, and attach the EMC shielded bracket to the power supply unit with this screw.

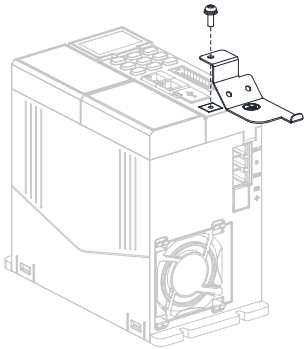

   b. Insert the input terminal (for the terminal crimping, see *"3.2.2 Wiring" on page 23*), and attach the input grounding cable to the EMC shielded bracket with one M4x10 screw.

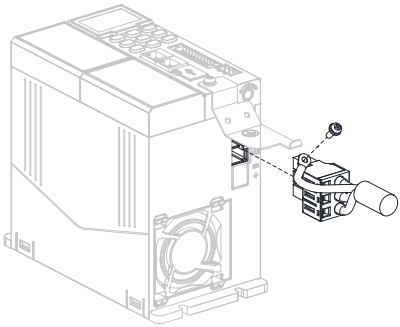

c. Strip the power input cable shield (about 15 mm), and attach the shield to the EMC shielded bracket with a hose clamp.

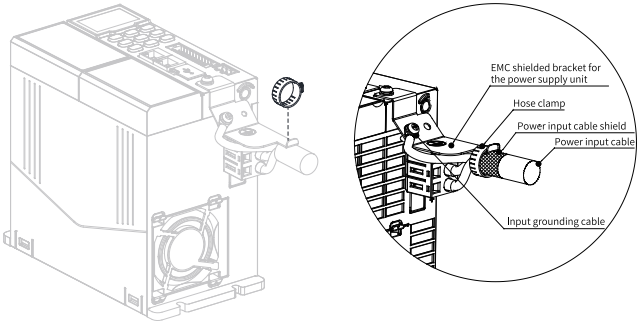

d. Insert the control and relay terminals.

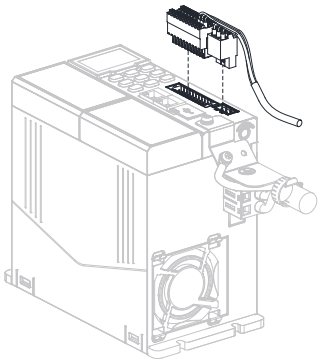

e. Strip the control cable shield (about 15 mm), and attach the shield to the EMC shielded bracket with a 360° control cable grounding clamp and one M4x10 screw.

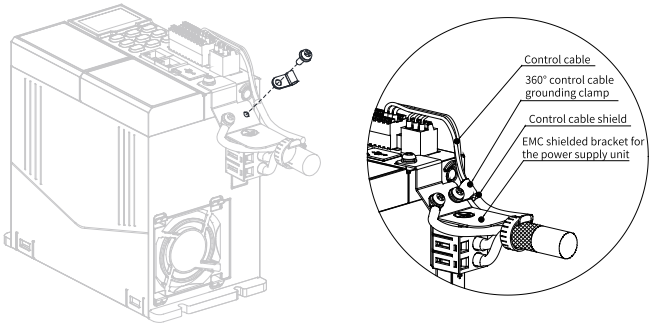

2. Connecting the drive unit

a. Attach the EMC shielded bracket to the drive unit with two M4x10 screws.

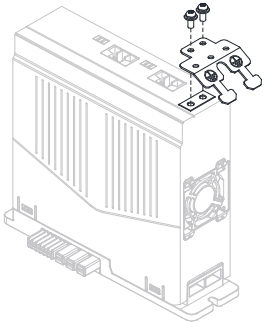

b. Attach the drive unit grounding cable to the EMC shielded bracket with one M4X10 screw.

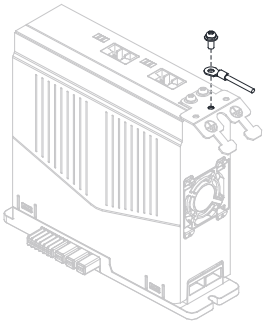

c. Insert the drive unit output terminals, and attach the output grounding cables to the EMC shielded bracket with M4x10 screws.

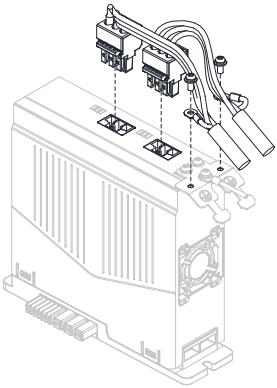

d. Strip the output cable shields (about 15 mm), and attach the shields to the EMC shielded bracket with hose clamps.

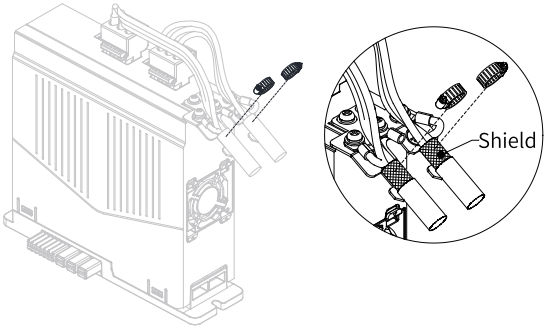

The completed wiring is as follows.

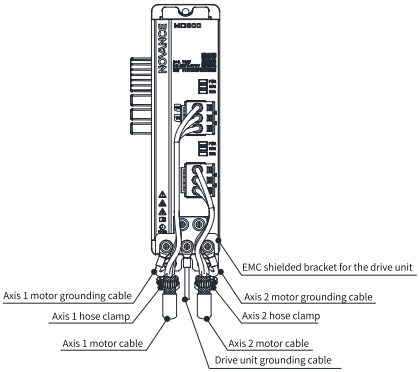

3.2.4 Inspection After Wiring

After wiring has been completed, check the items in the following table. Sign the corresponding "Applicable?" column after each inspection.

Table 3–1 Wiring checklist

No.	Inspection Item	Applicable?
1	The power input cables are connected to the R/L1, S, and T/L2 terminals.	
2	The motor input cables are connected to the U, V, and W terminals.	
3	The cross-sectional area of the main circuit cables meets the requirements.	
4	The heat-shrink tubes have been added to the cores of main circuit cables, and the tubes completely cover the cable conductors.	
5	Confirm whether the motor output cables are longer than 150 m (unshielded) or 50 m (shielded). If yes, reduce the carrier frequency (F0-15) and add an output reactor (see the requirements for options).	
6	The grounding cables are connected correctly.	
7	The AC drive output terminals and control signal terminals are securely connected.	
8	The braking resistor and braking unit (if used) are connected correctly and have proper resistance.	
9	The control circuit cables are shielded twisted pairs (STPs).	
10	The optional cards are connected correctly.	
11	If the AC drive is an STO model, confirm that the external 24 V power supply is connected properly.	

No.	Inspection Item	Applicable?
12	The control circuit cables and main circuit cables are routed separately.	
13	The protective cover removed from the power supply unit is reinstalled on the connector of the rightmost drive unit.	

3.2.5 System Grounding

Securely ground each module of the AC drive, including the power supply unit, drive unit, and filter module. Connect the power supply unit, drive unit, input reactor, and filter (or filter module) to the grounding copper busbar of the cabinet in star manner, and connect the output side of the drive unit to the motor, as shown in the following figure.

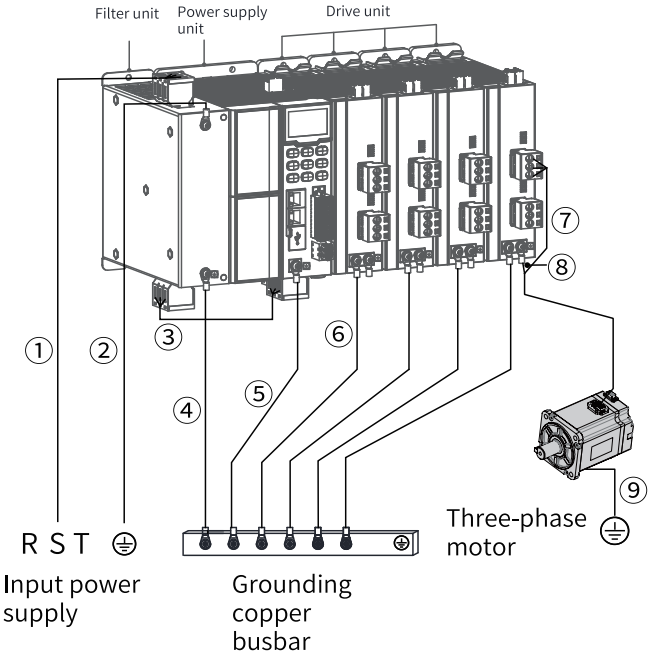

Figure 3-1 System grounding

No.	Wiring Description
①	Connect the input terminal of the filter module to the power RST input terminal.
②	Connect the input grounding screw of the filter module to the power grounding terminal.
③	Connect the output terminal of the filter module to the input terminal of the power supply unit. Use a shielded cable.
④	Connect the output M4 grounding screw of the filter module to the grounding copper busbar.
⑤	Connect the M4 grounding screw of the power supply unit to the grounding copper busbar.
⑥	Connect the M4 grounding screw of the drive unit to the grounding copper busbar.
⑦	Connect the output side of the drive unit to the motor input side.
⑧	Connect the grounding wire of the motor output cable of the drive unit to the grounding screw of the drive unit.
⑨	Ground the motor enclosure.

Note

In the preceding figure, the power supply unit is equipped with four dual-axis drive units. In the figure, only axis 1 of the rightmost drive unit is taken as an example to introduce the wiring of the drive unit. The wiring for other drive units is similar.

4 Commissioning and Trial Operation

4.1 Basic Commissioning Procedure

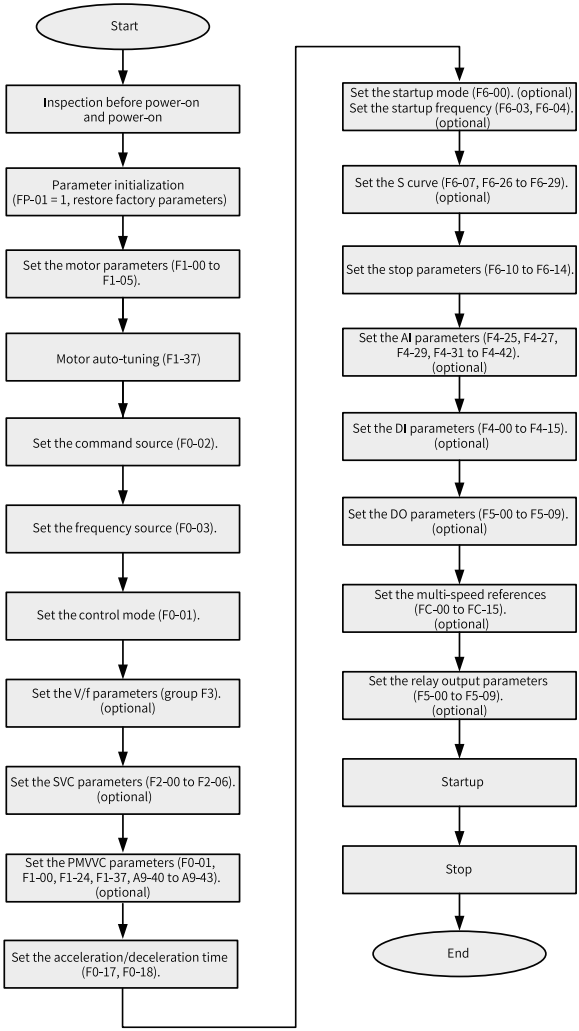

Figure 4-1 Basic commissioning flowchart

4.2 Commissioning Procedure Under V/f Control

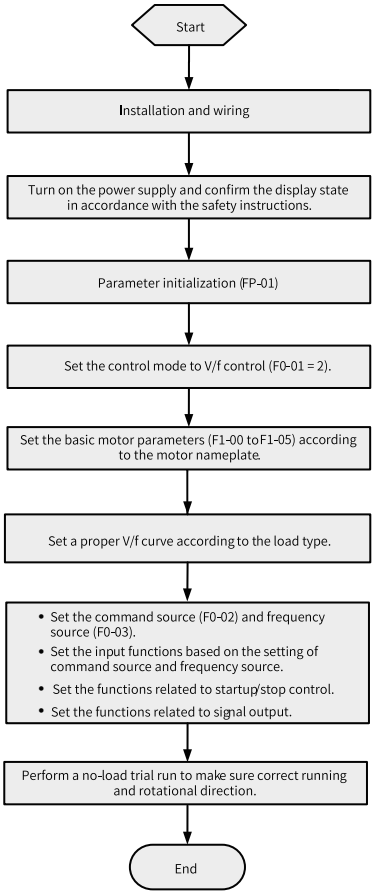

Figure 4-2 Commissioning flowchart under voltage/frequency (V/f) control

4.3 Commissioning Procedure Under SVC

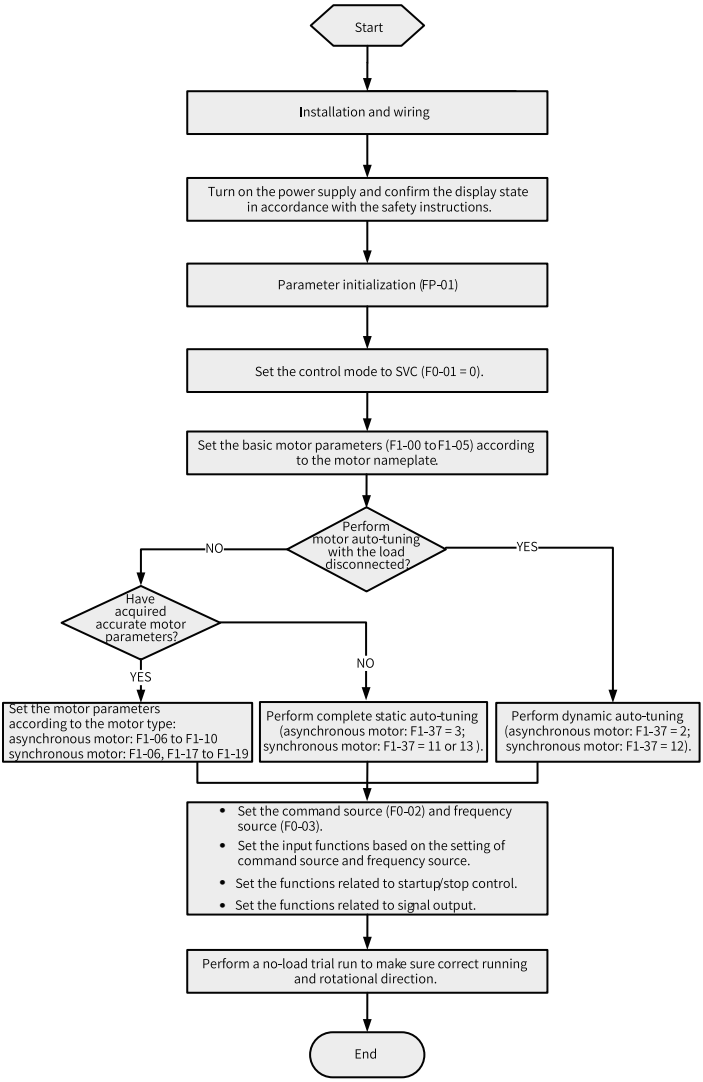

Figure 4-3 Commissioning flowchart under sensorless vector control (SVC)

4.4 Commissioning Procedure Under PMVVC

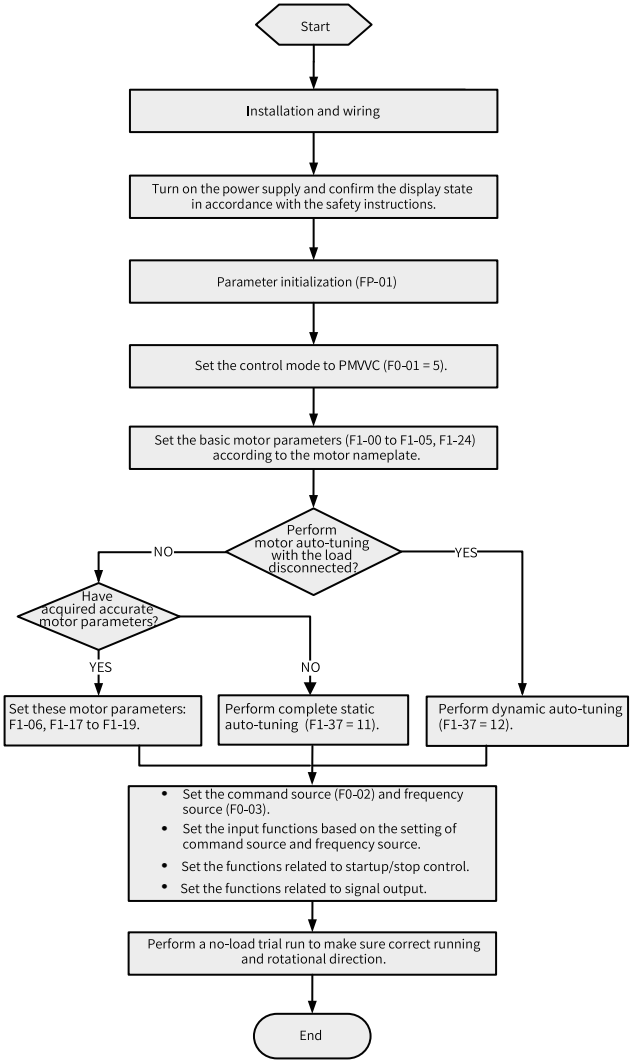

Figure 4-4 Commissioning flowchart under permanent magnet voltage vector control (PMVVC)

4.5 Parameter List for the Power Supply Unit

Table 4–1 Parameter list for the power supply unit

Code	Communication Address	Name	Value Range	Default	Unit	Change Mode
F0-01	0xF001	Product No.	800	800	-	Unchangeable
F0-02	0xF002	Software version	0.00–655.35	0.00	-	Unchangeable
F0-03	0xF003	Temporary software version	0.00–655.35	0.00	-	Unchangeable
F0-04	0xF004	Customized No.	0–9999	0	-	Unchangeable
F1-00	0xF100	Bus undervoltage threshold	150 V to 440 V	330	V	Real-time
F1-01	0xF101	Bus overvoltage threshold	300 V to 820 V	820	V	Real-time
F1-02	0xF102	Braking unit action voltage	300 V to 820 V	750	V	Real-time
F1-03	0xF103	Braking transistor open-circuit fault	0: Disable 1: Enable	1	-	Real-time
F1-04	0xF104	Braking transistor short circuit fault	0: Disable 1: Enable	1	-	Real-time
F1-05	0xF105	Input phase loss fault	0: Disable 1: Enable 2: Warning	2	-	Real-time
F1-06	0xF106	Input overvoltage fault	0: Disable 1: Enable 2: Warning	2	-	Real-time
F1-07	0xF107	Fan fault	0: Disable 1: Enable 2: Warning	1	-	Real-time
F1-09	0xF109	Fan control	0: Running in one direction 1: Forward and reverse running	0	-	Real-time
F4-00	0xF400	DI1 hardware source	0: No selection 1: Power supply unit - DI1 2: Power supply unit - DI2 3: Power supply unit - DI3 4: Power supply unit - DI4 5: Power supply unit - DIO1 6: Power supply unit - DIO2 7: Power supply unit - DIO3 8: Power supply unit - DIO4 101: Expansion card 1 - DI1 102: Expansion card 1 - DI2 103: Expansion card 1 - DI3	0	-	At stop

Code	Communication Address	Name	Value Range	Default	Unit	Change Mode
			104: Expansion card 1 - DI4 105: Expansion card 1 - DI5 106: Expansion card 1 - DI6 107: Expansion card 1 - DI7 108: Expansion card 1 - DI8 201: Expansion card 2 - DI1 202: Expansion card 2 - DI2 203: Expansion card 2 - DI3 204: Expansion card 2 - DI4 205: Expansion card 2 - DI5 206: Expansion card 2 - DI6 207: Expansion card 2 - DI7 208: Expansion card 2 - DI8			
F4-01	0xF401	DI1 function	0: No function 1: Running enable 2: Incoming circuit breaker feedback 3: Auxiliary circuit breaker feedback 4: Residual current circuit breaker feedback 5: Fault reset 6: Drive unit running prohibition 7: Drive unit coast to stop 8: Drive unit stops according to preset mode	0	-	At stop
F4-02	0xF402	DI2 hardware source	Same as F4–00	0	-	At stop
F4-03	0xF403	DI2 function	Same as F4–01	0	-	At stop
F4-04	0xF404	DI3 hardware source	Same as F4–00	0	-	At stop
F4-05	0xF405	DI3 function	Same as F4–01	0	-	Real-time
F4-06	0xF406	AI3 hardware source	Same as F4–00	0	-	At stop
F4-07	0xF407	DI4 function	Same as F4–01	0	-	At stop
F4-08	0xF408	DI5 hardware source	Same as F4–00	0	-	At stop
F4-09	0xF409	DI5 function	Same as F4–01	0	-	At stop
F4-10	0xF40A	DI6 hardware source	Same as F4–00	0	-	At stop
F4-11	0xF40B	DI6 function	Same as F4–01	0	-	At stop
F4-12	0xF40C	DI7 hardware source	Same as F4–00	0	-	At stop
F4-13	0xF40D	DI7 function	Same as F4–01	0	-	At stop
F4-14	0xF40E	DI8 hardware source	Same as F4–00	0	-	At stop
F4-15	0xF40F	DI8 function	Same as F4–01	0	-	At stop
F4-16	0xF410	DI1 active delay	0.00s to 600.00s	0.00	s	Real-time
F4-17	0xF411	DI2 active delay	0.00s to 600.00s	0.00	s	Real-time
F4-18	0xF412	DI3 active delay	0.00s to 600.00s	0.00	s	Real-time

Code	Communication Address	Name	Value Range	Default	Unit	Change Mode
F4-19	0xF413	DI4 active delay	0.00s to 600.00s	0.00	s	Real-time
F4-20	0xF414	DI5 active delay	0.00s to 600.00s	0.00	s	Real-time
F4-21	0xF415	DI6 active delay	0.00s to 600.00s	0.00	s	Real-time
F4-22	0xF416	DI7 active delay	0.00s to 600.00s	0.00	s	Real-time
F4-23	0xF417	DI8 active delay	0.00s to 600.00s	0.00	s	Real-time
F4-24	0xF418	DI1 inactive delay	0.00s to 600.00s	0.00	s	Real-time
F4-25	0xF419	DI2 inactive delay	0.00s to 600.00s	0.00	s	Real-time
F4-26	0xF41A	DI3 inactive delay	0.00s to 600.00s	0.00	s	Real-time
F4-27	0xF41B	DI4 inactive delay	0.00s to 600.00s	0.00	s	Real-time
F4-28	0xF41C	DI5 inactive delay	0.00s to 600.00s	0.00	s	Real-time
F4-29	0xF41D	DI6 inactive delay	0.00s to 600.00s	0.00	s	Real-time
F4-30	0xF41E	DI7 inactive delay	0.00s to 600.00s	0.00	s	Real-time
F4-31	0xF41F	DI8 inactive delay	0.00s to 600.00s	0.00	s	Real-time
F4-32	0xF420	DI (DI1 to DI5) active mode	Ones: 0: Active low 1: Active high Tens: 0: Active low 1: Active high Hundreds: 0: Active low 1: Active high Thousands: 0: Active low 1: Active high Ten thousands: 0: Active low 1: Active high	0	-	Real-time
F4-33	0xF421	DI (DI6 to DI8) active mode	Same as F4–32	0	-	Real-time
F5-00	0xF500	DO1/RO1 hardware source	0: No selection 1: Power supply unit - DIO1 2: Power supply unit - DIO2 3: Power supply unit - DIO3 4: Power supply unit - DIO4 5: Power supply unit - RO1 101: Expansion card 1 - DO1/RO1 102: Expansion card 1 - DO2/RO2	0	-	At stop

Code	Communication Address	Name	Value Range	Default	Unit	Change Mode
			103: Expansion card 1 - DO3/RO3 104: Expansion card 1 - DO4/RO4 105: Expansion card 1 - DO5/RO5 106: Expansion card 1 - DO6/RO6 107: Expansion card 1 - DO7/RO7 108: Expansion card 1 - DO8/RO8 201: Expansion card 2 - DO1/RO1 202: Expansion card 2 - DO2/RO2 203: Expansion card 2 - DO3/RO3 204: Expansion card 2 - DO4/RO4 205: Expansion card 2 - DO5/RO5 206: Expansion card 2 - DO6/RO6 207: Expansion card 2 - DO7/RO7 208: Expansion card 2 - DO8/RO8			
F5-01	0xF501	DO1/RO1 output function	0: No function 1: Ready to run 2: Fault 3: Warning 4: Circuit breaker action 5: Bus undervoltage 6: Bus overvoltage 7: Bus voltage normal 8: Three-phase input abnormal 9: Three-phase input normal 10: Module overheat output 11: Module overheat warning output 12 Communication control	0	-	At stop
F5-02	0xF502	DO2/RO2 hardware source	Same as F5–00	0	-	At stop

Code	Communication Address	Name	Value Range	Default	Unit	Change Mode
F5-03	0xF503	DO2/RO2 output function	Same as F5–01	0	-	At stop
F5-04	0xF504	DO3/RO3 hardware source	Same as F5–00	0	-	At stop
F5-05	0xF505	DO3/RO3 output function	Same as F5–01	0	-	At stop
F5-06	0xF506	DO4/RO4 hardware source	Same as F5–00	0	-	At stop
F5-07	0xF507	DO4/RO4 output function	Same as F5–01	0	-	At stop
F5-08	0xF508	DO5/RO5 hardware source	Same as F5–00	0	-	At stop
F5-09	0xF509	DO5/RO5 output function	Same as F5–01	0	-	At stop
F5-10	0xF50A	DO1/RO1 active delay	0.00s to 600.00s	0.00	s	Real-time
F5-11	0xF50B	DO2/RO2 active delay	0.00s to 600.00s	0.00	s	Real-time
F5-12	0xF50C	DO3/RO3 active delay	0.00s to 600.00s	0.00	s	Real-time
F5-13	0xF50D	DO4/RO4 active delay	0.00s to 600.00s	0.00	s	Real-time
F5-14	0xF50E	DO5/RO5 active delay	0.00s to 600.00s	0.00	s	Real-time
F5-15	0xF50F	DO1/RO1 invalid delay	0.00s to 600.00s	0.00	s	Real-time
F5-16	0xF510	DO2/RO2 invalid delay	0.00s to 600.00s	0.00	s	Real-time
F5-17	0xF511	DO3/RO3 invalid delay	0.00s to 600.00s	0.00	s	Real-time
F5-18	0xF512	DO4/RO4 invalid delay	0.00s to 600.00s	0.00	s	Real-time
F5-19	0xF513	DO5/RO5 invalid delay	0.00s to 600.00s	0.00	s	Real-time
F5-20	0xF514	DO/RO output valid mode	Ones: 0: Active high 1: Active low Tens: 0: Active high 1: Active low Hundreds: 0: Active high 1: Active low Thousands: 0: Active high 1: Active low Ten thousands: 0: Active high 1: Active low	0	-	Real-time
F5-21	0xF515	Circuit breaker action threshold	0 V to 1000 V	570	V	Real-time
FA-00	0xFA00	Fault code of the 5th fault (last fault)	0	0	-	Unchangeable
FA-01	0xFA01	Fault subcode of the 5th fault	0	0	-	Unchangeable

Code	Communication Address	Name	Value Range	Default	Unit	Change Mode
FA-02	0xFA02	Bus voltage upon the 5th fault	0.0 V	0.0	V	Unchangeable
FA-03	0xFA03	Heatsink temperature upon the 5th fault	0°C	0	°C	Unchangeable
FA-04	0xFA04	Ambient temperature upon the 5th fault	0°C	0	°C	Unchangeable
FA-06	0xFA06	Grid voltage (Usr) upon the 5th fault	0 V	0	V	Unchangeable
FA-07	0xFA07	Grid voltage (Ust) upon the 5th fault	0 V	0	V	Unchangeable
FA-08	0xFA08	Grid voltage (Utr) upon the 5th fault	0 V	0	V	Unchangeable
FA-09	0xFA09	Three-phase imbalance factor upon the 5th fault	0.00%	0.00	%	Unchangeable
FA-10	0xFA0A	DI status upon the 5th fault	0	0	-	Unchangeable
FA-11	0xFA0B	DO/RO status upon the 5th fault	0	0	-	Unchangeable
FA-12	0xFA0C	Stop command sent by the power supply unit upon the 5th fault	1: Ready to run 2: Coast to stop 3: Stop according to the preset mode	0	-	Unchangeable
FA-13	0xFA0D	Total power-on time (hour) upon the 5th fault	0 h	0	h	Unchangeable
FA-14	0xFA0E	Total power-on time (minute) upon the 5th fault	0 min	0	min	Unchangeable
FA-15	0xFA0F	Total power-on time (second) upon the 5th fault	0s	0	s	Unchangeable
FA-20	0xFA14	Fault code of the 4th fault (last 2nd fault)	0	0	-	Unchangeable
FA-21	0xFA15	Fault subcode of the 4th fault	0	0	-	Unchangeable
FA-22	0xFA16	Bus voltage upon the 4th fault	0.0 V	0.0	V	Unchangeable
FA-23	0xFA17	Heatsink temperature upon the 4th fault	0°C	0	°C	Unchangeable
FA-24	0xFA18	Ambient temperature upon the 4th fault	0°C	0	°C	Unchangeable
FA-26	0xFA1A	Grid voltage (Usr) upon the 4th fault	0 V	0	V	Unchangeable
FA-27	0xFA1B	Grid voltage (Ust) upon the 4th fault	0 V	0	V	Unchangeable
FA-28	0xFA1C	Grid voltage (Utr) upon the 4th fault	0 V	0	V	Unchangeable

Code	Communication Address	Name	Value Range	Default	Unit	Change Mode
FA-29	0xFA1D	Three-phase imbalance factor upon the 4th fault	0.00%	0.00	%	Unchangeable
FA-30	0xFA1E	DI status upon the 4th fault	0	0	-	Unchangeable
FA-31	0xFA1F	DO/RO status upon the 4th fault	0	0	-	Unchangeable
FA-32	0xFA20	Stop command sent by the power supply unit upon the 4th fault	1: Ready to run 2: Coast to stop 3: Stop according to the preset mode	0	-	Unchangeable
FA-33	0xFA21	Total power-on time (hour) upon the 4th fault	0 h	0	h	Unchangeable
FA-34	0xFA22	Total power-on time (minute) upon the 4th fault	0 min	0	min	Unchangeable
FA-35	0xFA23	Total power-on time (second) upon the 4th fault	0s	0	s	Unchangeable
FA-40	0xFA28	Fault code of the 3rd fault (last 3rd fault)	0	0	-	Unchangeable
FA-41	0xFA29	Fault subcode of the 3rd fault	0	0	-	Unchangeable
FA-42	0xFA2A	Bus voltage upon the 3rd fault	0.0 V	0.0	V	Unchangeable
FA-43	0xFA2B	Heatsink temperature upon the 3rd fault	0°C	0	°C	Unchangeable
FA-44	0xFA2C	Ambient temperature upon the 3rd fault	0°C	0	°C	Unchangeable
FA-46	0xFA2E	Grid voltage (Usr) upon the 3rd fault	0 V	0	V	Unchangeable
FA-47	0xFA2F	Grid voltage (Ust) upon the 3rd fault	0 V	0	V	Unchangeable
FA-48	0xFA30	Grid voltage (Utr) upon the 3rd fault	0 V	0	V	Unchangeable
FA-49	0xFA31	Three-phase imbalance factor upon the 3rd fault	0.00%	0.00	%	Unchangeable
FA-50	0xFA32	DI status upon the 3rd fault	0	0	-	Unchangeable
FA-51	0xFA33	DO/RO status upon the 3rd fault	0	0	-	Unchangeable
FA-52	0xFA34	Stop command sent by the power supply unit upon the 3rd fault	1: Ready to run 2: Coast to stop 3: Stop according to the preset mode	0	-	Unchangeable
FA-53	0xFA35	Total power-on time (hour) upon the 3rd fault	0 h	0	h	Unchangeable

Code	Communication Address	Name	Value Range	Default	Unit	Change Mode
FA-54	0xFA36	Total power-on time (minute) upon the 3rd fault	0 min	0	min	Unchangeable
FA-55	0xFA37	Total power-on time (second) upon the 3rd fault	0s	0	s	Unchangeable
FA-60	0xFA3C	Fault code of the 2nd fault (last 4th fault)	0	0	-	Unchangeable
FA-61	0xFA3D	Fault subcode upon the 2nd fault	0	0	-	Unchangeable
FA-62	0xFA3E	Bus voltage upon the 2nd fault	0.0 V	0.0	V	Unchangeable
FA-63	0xFA3F	Heatsink temperature upon the 2nd fault	0°C	0	°C	Unchangeable
FA-64	0xFA40	Ambient temperature upon the 2nd fault	0°C	0	°C	Unchangeable
FA-66	0xFA42	Grid voltage (Usr) upon the 2nd fault	0 V	0	V	Unchangeable
FA-67	0xFA43	Grid voltage (Ust) upon the 2nd fault	0 V	0	V	Unchangeable
FA-68	0xFA44	Grid voltage (Utr) upon the 2nd fault	0 V	0	V	Unchangeable
FA-69	0xFA45	Three-phase imbalance factor upon the 2nd fault	0.00%	0.00	%	Unchangeable
FA-70	0xFA46	DI status upon the 2nd fault	0	0	-	Unchangeable
FA-71	0xFA47	DO/RO status upon the 2nd fault	0	0	-	Unchangeable
FA-72	0xFA48	Stop command sent by the power supply unit upon the 2nd fault	1: Ready to run 2: Coast to stop 3: Stop according to the preset mode	0	-	Unchangeable
FA-73	0xFA49	Total power-on time (hour) upon the 2nd fault	0 h	0	h	Unchangeable
FA-74	0xFA4A	Total power-on time (minute) upon the 2nd fault	0 min	0	min	Unchangeable
FA-75	0xFA4B	Total power-on time (second) upon the 2nd fault	0s	0	s	Unchangeable
FA-80	0xFA50	Fault code of the 1st fault (last 5th fault)	0	0	-	Unchangeable
FA-81	0xFA51	Fault subcode upon the 1st fault	0	0	-	Unchangeable
FA-82	0xFA52	Bus voltage upon the 1st fault	0.0 V	0.0	V	Unchangeable

Code	Communication Address	Name	Value Range	Default	Unit	Change Mode
FA-83	0xFA53	Heatsink temperature upon the 1st fault	0°C	0	°C	Unchangeable
FA-84	0xFA54	Ambient temperature upon the 1st fault	0°C	0	°C	Unchangeable
FA-86	0xFA56	Grid voltage (Usr) upon the 1st fault	0 V	0	V	Unchangeable
FA-87	0xFA57	Grid voltage (Ust) upon the 1st fault	0 V	0	V	Unchangeable
FA-88	0xFA58	Grid voltage (Utr) upon the 1st fault	0 V	0	V	Unchangeable
FA-89	0xFA59	Three-phase imbalance factor upon the 1st fault	0.00%	0.00	%	Unchangeable
FA-90	0xFA5A	DI status upon the 1st fault	0	0	-	Unchangeable
FA-91	0xFA5B	DO/RO status upon the 1st fault	0	0	-	Unchangeable
FA-92	0xFA5C	Stop command sent by the power supply unit upon the 1st fault	1: Ready to run 2: Coast to stop 3: Stop according to the preset mode	0	-	Unchangeable
FA-93	0xFA5D	Total power-on time (hour) upon the 1st fault	0 h	0	h	Unchangeable
FA-94	0xFA5E	Total power-on time (minute) upon the 1st fault	0 min	0	min	Unchangeable
FA-95	0xFA5F	Total power-on time (second) upon the 1st fault	0s	0	s	Unchangeable
FD-00	0xFD00	RS485 baud rate	0: 300 bit/s 1: 600 bit/s 2: 1200 bit/s 3: 2400 bit/s 4: 4800 bit/s 5: 9600 bit/s 6: 19200 bit/s 7: 38400 bit/s 8: 57600 bit/s 9: 115200 bit/s	5	-	At stop
FD-01	0xFD01	RS485 data format	0: No check (8-N-2) 1: Even parity check (8-E-1) 2: Odd parity check (8-O-1) 3: No check (8-N-1) 4: No check (7-N-2) 5: Even parity check (7-E-1) 6: Odd parity check (7-O-1) 7: No check (7-N-1)	0	-	Real-time

Code	Communication Address	Name	Value Range	Default	Unit	Change Mode
FD-02	0xFD02	RS485 local address	1–127	16	-	Unchangeable
FD-03	0xFD03	RS485 response delay	0 ms to 20 ms	2	ms	Real-time
FD-04	0xFD04	RS485 communication timeout	0.0s to 60.0s	0.0	s	Real-time
FD-06	0xFD06	Automatic communication fault reset	0: Disable 1: Enable	1	-	Real-time
FD-07	0xFD07	Maximum station number allocated automatically	0–8	0	-	Real-time
FD-09	0xFD09	Communication status	0: CANopen 0: Stop 1: Initialization 2: Pre-running 8: Running 0: CANlink 0: Stop 1: Initialization 2: Pre-running 8: Running	0	-	Unchangeable
FD-10	0xFD0A	Communication type	1: CANopen 2: CANlink 3: Communication card mode	1	-	Real-time
FD-12	0xFD0C	CAN baud rate	0: 20 k 1: 50 k 2: 100 k 3: 125 k 4: 250 k 5: 500 k 6: 1 M	5	-	Real-time
FD-13	0xFD0D	CAN station number	1–127	16	-	Unchangeable
FD-14	0xFD0E	Number of CAN frames received per unit time (real-time)	0–65535	0	-	Unchangeable
FD-15	0xFD0F	Maximum number of times that the node receives incorrect data (real-time)	0–65535	0	-	Unchangeable
FD-16	0xFD10	Maximum number of times that the node sends incorrect data (real-time)	0–65535	0	-	Unchangeable

Code	Communication Address	Name	Value Range	Default	Unit	Change Mode
FD-17	0xFD11	Number of bus disconnection times per unit of time	0–65535	0	-	Unchangeable
FD-18	0xFD12	Power supply unit No.	1–15	1	-	Real-time
FD-19	0xFD13	CAN communication disconnection coefficient	1–15	1	-	Real-time
FD-34	0xFD22	CANopen mode	0: Standard mode 1: Expert mode	0	-	Real-time
FD-35	0xFD23	CANopen disabling time	0–65535	0	-	Real-time
FD-36	0xFD24	CANopen event time	0–65535	0	-	Real-time
FD-39	0xFD27	AC drive station number setting	0: Disable 1: Enable	0	-	Real-time
FD-40	0xFD28	Manual setting of power supply unit station number	0–127	0	-	Real-time
FD-41	0xFD29	Manual setting of drive unit 1 station number	0–127	0	-	Real-time
FD-42	0xFD2A	Manual setting of drive unit 2 station number	0–127	0	-	Real-time
FD-43	0xFD2B	Manual setting of drive unit 3 station number	0–127	0	-	Real-time
FD-44	0xFD2C	Manual setting of drive unit 4 station number	0–127	0	-	Real-time
FD-45	0xFD2D	Manual setting of drive unit 5 station number	0–127	0	-	Real-time
FD-46	0xFD2E	Manual setting of drive unit 6 station number	0–127	0	-	Real-time
FD-47	0xFD2F	Manual setting of drive unit 7 station number	0–127	0	-	Real-time
FD-48	0xFD30	Manual setting of drive unit 8 station number	0–127	0	-	Real-time
FD-50	0xFD32	Start upon drive unit fault	0: Disable 1: Enable	0	-	Real-time
FD-51	0xFD33	Network bridge data interaction period	0 ms to 65535 ms	0	ms	Unchangeable
FD-52	0xFD34	Number of online slaves	0–30	0	-	Unchangeable
FD-53	0xFD35	Slave online state (1-15)	0–65535	0	-	Unchangeable
FD-54	0xFD36	Slave online state (16-31)	0–65535	0	-	Unchangeable
FD-55	0xFD37	PN timeout time	0 ms to 65535 ms	0	ms	Real-time
FD-56	0xFD38	PN chip state	0–65535	0	-	Unchangeable
FD-57	0xFD39	Communication card state	0: Initialization 1: Running	0	-	Unchangeable

Code	Communication Address	Name	Value Range	Default	Unit	Change Mode
			2: Stop 3: Reconnecting			
FD-61	0xFD3D	MAC address 1	0–65535	0	-	Unchangeable
FD-62	0xFD3E	MAC address 2	0–65535	0	-	Unchangeable
FD-63	0xFD3F	MAC address 3	0–65535	0	-	Unchangeable
FD-70	0xFD46	EtherCAT station name	0–65535	0	-	Unchangeable
FD-71	0xFD47	EtherCAT station alias	0–65535	0	-	Real-time
FD-72	0xFD48	Number of times for synchronization interruption signal loss allowed by the EtherCAT module	0–30	10	-	Real-time
FD-73	0xFD49	EtherCAT port 0 CRC error	0–65535	0	-	Unchangeable
FD-74	0xFD4A	EtherCAT port 1 CRC error	0–65535	0	-	Unchangeable
FD-75	0xFD4B	EtherCAT port 0/1 data forward error	0–65535	0	-	Unchangeable
FD-76	0xFD4C	EtherCAT processing unit and PDI error	0–65535	0	-	Unchangeable
FD-77	0xFD4D	EtherCAT port 0/1 link loss	0–65535	0	-	Unchangeable
FD-78	0xFD4E	EtherCAT master type	0–65535	0	-	Real-time
FD-79	0xFD4F	EtherCAT synchronization error monitoring mode	0–65535	0	-	Real-time
FD-80	0xFD50	Number of lost EtherCAT synchronization frames	0–65535	0	-	Unchangeable
FD-81	0xFD51	EtherCAT state machine and PHYLink state	0–65535	0	-	Unchangeable
FD-82	0xFD52	EtherCAT - AL fault code	0–65535	0	-	Unchangeable
FD-83	0xFD53	EtherCAT - XML file version	0.00–655.35	0.00	-	Unchangeable
FD-84	0xFD54	EtherCAT - FPGA firmware version	0–65535	0	-	Unchangeable
FD-85	0xFD55	Station alias backup display	0–65535	0	-	Unchangeable
FD-86	0xFD56	EtherCAT - EEPROM reading time	0–65535	0	-	Real-time
FD-87	0xFD57	EtherCAT - DC gain	0–65535	0	-	Real-time

Code	Communication Address	Name	Value Range	Default	Unit	Change Mode
FD-88	0xFD58	EtherCAT - DC acceleration limit	0–65535	0	-	Real-time
FD-89	0xFD59	EtherCAT - DC speed limit	0–65535	0	-	Real-time
FD-90	0xFD5A	EtherCAT - DC integral coefficient	0–65535	0	-	Real-time
FD-91	0xFD5B	Communication card version	0.00–655.35	0.00	-	Unchangeable
FD-92	0xFD5C	Communication version	0.00–655.35	0.00	-	Unchangeable
FD-93	0xFD5D	Station number of device connected to expansion card slot 1	0–65535	0	-	Unchangeable
FD-94	0xFD5E	Station number of device connected to expansion card slot 2	0–65535	0	-	Unchangeable
FD-95	0xFD5F	Station number of device connected to expansion card slot 3	0–65535	0	-	Unchangeable
FD-96	0xFD60	Station number of device connected to reserved slot 4	0–65535	0	-	Unchangeable
FD-97	0xFD61	Station number of device connected to reserved slot 5	0–65535	0	-	Unchangeable
FD-98	0xFD62	Station number of device connected to reserved slot 6	0–65535	0	-	Unchangeable
FD-99	0xFD63	Station number of device connected to reserved slot 7	0–65535	0	-	Unchangeable
FF-00	0xFF00	Manufacturer password	0–65535	0	-	Real-time
FF-01	0xFF01	Model	0–2	0	-	Real-time
FF-02	0xFF02	Power rating	0.0–999.9 kW	3.7	kW	Real-time
FF-03	0xFF03	Voltage class	0 V to 999 V	380	V	Real-time
FF-05	0xFF05	Bus voltage correction coefficient	80.0–140.0	100.0	-	Real-time
FF-10	0xFF0A	Memory address view	0	0	-	Real-time
FF-11	0xFF0B	Parameter group display setting 1	0–11111	11111	-	Real-time
FF-12	0xFF0C	Parameter group display setting 2	0–11111	0	-	Real-time
FF-13	0xFF0D	Parameter group display setting 4	0–11111	11111	-	Real-time

Code	Communication Address	Name	Value Range	Default	Unit	Change Mode
FF-14	0xFF0E	Three-phase input unbalance detection threshold	3.00% to 10.00%	10.00	%	Real-time
FF-15	0xFF0F	Parameter group display setting 3	0–11111	11111	-	Real-time
FF-17	0xFF11	Urs line voltage correction coefficient	80.0% to 140.0%	100.0	%	Real-time
FF-18	0xFF12	Ust line voltage correction coefficient	80.0% to 140.0%	100.0	%	Real-time
FF-19	0xFF13	Utr line voltage correction coefficient	80.0% to 140.0%	100.0	%	Real-time
FP-00	0x1F00	User password	0–65535	0	-	Real-time
FP-01	0x1F01	Parameter initialization	0: No operation 1: Restore to factory settings 2: Clear records 4: Back up current user parameters 501: Restore user backup parameters	1	-	Real-time
FP-03	0x1F03	Monitoring parameter display	Bit 0: Bus voltage Bit 1: Heatsink temperature Bit 2: Ambient temperature Bit 3: Usr line voltage Bit 4: Ust line voltage Bit 5: Utr line voltage Bit 6: Three-phase unbalance factor	79	-	Real-time
FP-05	0x1F05	I/O card parameter restoration	0: Invalid 1: I/O expansion card 1 2: I/O expansion card 2 3: I/O expansion card 3 255: All I/O expansion cards	0	-	Real-time
FP-06	0x1F06	Local parameter copy mode	1: Copy all parameters 2: Copy non-motor parameters	2	-	Real-time
FP-07	0x1F07	Local parameter copy operation	0–28	0	-	Real-time
A0-00	0xA000	I/O expansion card communication cycle	0–100	0	-	Real-time
A0-01	0xA001	Alarm threshold of consecutive drive unit frame loss	0–1000	10	-	Real-time
A0-02	0xA002	Number of alarms for continuous frame loss of the I/O expansion card	0–1000	10	-	Real-time

Code	Communication Address	Name	Value Range	Default	Unit	Change Mode
A0-03	0xA003	Station number display of drive unit with frame loss	Bit 0: Drive unit 1 Bit 1: Drive unit 2 Bit 2: Drive unit 3 Bit 3: Drive unit 4 Bit 4: Drive unit 5 Bit 5: Drive unit 6 Bit 6: Drive unit 7 Bit 7: Drive unit 8	0	-	Unchangeable
A0-04	0xA004	Station number display of I/O expansion card with frame loss	Bit 0: I/O expansion card 1 Bit 1: I/O expansion card 2 Bit 2: I/O expansion card 3	0	-	Unchangeable
A0-05	0xA005	Number of frame loss times for axis 1	0–65535	0	-	Unchangeable
A0-06	0xA006	Number of frame loss times for axis 2	0–65535	0	-	Unchangeable
A0-07	0xA007	Number of frame loss times for axis 3	0–65535	0	-	Unchangeable
A0-08	0xA008	Number of frame loss times for axis 4	0–65535	0	-	Unchangeable
A0-09	0xA009	Number of frame loss times for axis 5	0–65535	0	-	Unchangeable
A0-10	0xA00A	Number of frame loss times for axis 6	0–65535	0	-	Unchangeable
A0-11	0xA00B	Number of frame loss times for axis 7	0–65535	0	-	Unchangeable
A0-12	0xA00C	Number of frame loss times for axis 8	0–65535	0	-	Unchangeable
A0-13	0xA00D	Number of frame loss times for expansion card 1	0–65535	0	-	Unchangeable
A0-14	0xA00E	Number of frame loss times for expansion card 2	0–65535	0	-	Unchangeable
A0-15	0xA00F	Number of frame loss times for expansion card 3	0–65535	0	-	Unchangeable
A1-00	0xA100	Filter time of DI1 to DI4 for power supply unit	0.000s to 5.000s	0.010	s	Real-time
A1-01	0xA101	Filter time of DI5 to DI8 for power supply unit	0.000s to 5.000s	0.010	s	Real-time
A1-05	0xA105	Filter time of AI1 for power supply unit	0.00s to 10.00s	0.10	s	Real-time
A1-06	0xA106	Filter time of AI2 for power supply unit	0.00s to 10.00s	0.10	s	Real-time
A1-10	0xA10A	Function of AI1 for power supply unit	0: Voltage input 1: Current input	0	-	At stop

Code	Communication Address	Name	Value Range	Default	Unit	Change Mode
			2: PT100 input 3: PT1000 input 4: KTY84 input 5: PTC130 input			
A1-11	0xA10B	Function of AI2 for power supply unit	0: Voltage input 1: Current input 2: PT100 input 3: PT1000 input 4: KTY84 input 5: PTC130 input	0	-	At stop
A2-00	0xA200	Filter time of DI1 to DI4 for expansion card 1	0.000s to 5.000s	0.010	s	Real-time
A2-01	0xA201	Filter time of DI5 to DI8 for expansion card 1	0.000s to 5.000s	0.010	s	Real-time
A2-05	0xA205	Filter time of AI1 for expansion card 1	0.00s to 10.00s	0.10	s	Real-time
A2-06	0xA206	Filter time of AI2 for expansion card 1	0.00s to 10.00s	0.10	s	Real-time
A2-10	0xA20A	Function of AI1 for expansion card 1	0: Voltage input 1: Current input 2: PT100 input 3: PT1000 input 4: KTY84 input 5: PTC130 input	0	-	At stop
A2-11	0xA20B	Function of AI2 for expansion card 1	0: Voltage input 1: Current input 2: PT100 input 3: PT1000 input 4: KTY84 input 5: PTC130 input	0	-	At stop
A3-00	0xA300	Filter time of expansion card 2 terminals (DI1 to DI4)	0.000s to 5.000s	0.010	s	Real-time
A3-01	0xA301	Extension card 2 - filter time of DI5 to DI4	0.000s to 5.000s	0.010	s	Real-time
A3-05	0xA305	Filter time of AI1 for expansion card 2	0.00s to 10.00s	0.10	s	Real-time
A3-06	0xA306	Filter time of AI2 for expansion card 2	0.00s to 10.00s	0.10	s	Real-time
A3-10	0xA30A	Function of AI1 for expansion card 2	0: Voltage input 1: Current input 2: PT100 input 3: PT1000 input 4: KTY84 input 5: PTC130 input	0	-	At stop

Code	Communication Address	Name	Value Range	Default	Unit	Change Mode
A3-11	0xA30B	Function of AI2 for expansion card 2	0: Voltage input 1: Current input 2: PT100 input 3: PT1000 input 4: KTY84 input 5: PTC130 input	0	-	At stop
AC-00	0xAC00	Measured voltage 1 of AI1 for power supply unit	0.000 V to 12.000 V	2.000	V	Real-time
AC-01	0xAC01	Displayed voltage 1 of AI1 for power supply unit	0.000 V to 12.000 V	2.000	V	Real-time
AC-02	0xAC02	Measured voltage 2 of AI1 for power supply unit	0.000 V to 12.000 V	2.000	V	Real-time
AC-03	0xAC03	Displayed voltage 2 of AI1 for power supply unit	0.000 V to 12.000 V	2.000	V	Real-time
AC-04	0xAC04	Measured voltage 1 of AI2 for power supply unit	0.000 V to 12.000 V	2.000	V	Real-time
AC-05	0xAC05	Displayed voltage 1 of AI2 for power supply unit	0.000 V to 12.000 V	2.000	V	Real-time
AC-06	0xAC06	Measured voltage 2 of AI2 for power supply unit	0.000 V to 12.000 V	2.000	V	Real-time
AC-07	0xAC07	Displayed voltage 2 of AI2 for power supply unit	0.000 V to 12.000 V	2.000	V	Real-time
AC-08	0xAC08	Measured voltage 1 of AI1 for expansion card 1	0.000 V to 12.000 V	2.000	V	Real-time
AC-09	0xAC09	Displayed voltage 1 of AI1 for expansion card 1	0.000 V to 12.000 V	2.000	V	Real-time
AC-10	0xAC0A	Measured voltage 2 of AI1 for expansion card 1	0.000 V to 12.000 V	2.000	V	Real-time
AC-11	0xAC0B	Displayed voltage 2 of AI1 for expansion card 1	0.000 V to 12.000 V	2.000	V	Real-time
AC-12	0xAC0C	Measured voltage 1 of AI2 for expansion card 1	0.000 V to 12.000 V	2.000	V	Real-time
AC-13	0xAC0D	Displayed voltage 1 of AI2 for expansion card 1	0.000 V to 12.000 V	2.000	V	Real-time
AC-14	0xAC0E	Measured voltage 2 of AI2 for expansion card 1	0.000 V to 12.000 V	2.000	V	Real-time
AC-15	0xAC0F	Displayed voltage 2 of AI2 for expansion card 1	0.000 V to 12.000 V	2.000	V	Real-time
AC-16	0xAC10	Measured voltage 1 of AI1 for expansion card 2	0.000 V to 12.000 V	2.000	V	Real-time
AC-17	0xAC11	Displayed voltage 1 of AI1 for expansion card 2	0.000 V to 12.000 V	2.000	V	Real-time
AC-18	0xAC12	Measured voltage 2 of AI1 for expansion card 2	0.000 V to 12.000 V	2.000	V	Real-time

Code	Communication Address	Name	Value Range	Default	Unit	Change Mode
AC-19	0xAC13	Displayed voltage 2 of AI1 for Expansion card 2	0.000 V to 12.000 V	2.000	V	Real-time
AC-20	0xAC14	Measured voltage 1 of AI2 for expansion card 2	0.000 V to 12.000 V	2.000	V	Real-time
AC-21	0xAC15	Displayed voltage 1 of AI2 for expansion card 2	0.000 V to 12.000 V	2.000	V	Real-time
AC-22	0xAC16	Measured voltage 2 of AI2 for expansion card 2	0.000 V to 12.000 V	2.000	V	Real-time
AC-23	0xAC17	Displayed voltage 2 of AI2 for expansion card 2	0.000 V to 12.000 V	2.000	V	Real-time
AC-24	0xAC18	Measured voltage 1 of AI1 for expansion card 3	0.000 V to 12.000 V	2.000	V	Real-time
AC-25	0xAC19	Displayed voltage 1 of AI1 for expansion card 3	0.000 V to 12.000 V	2.000	V	Real-time
AC-26	0xAC1A	Measured voltage 2 of AI1 for expansion card 3	0.000 V to 12.000 V	2.000	V	Real-time
AC-27	0xAC1B	Displayed voltage 2 of AI1 for expansion card 2	0.000 V to 12.000 V	2.000	V	Real-time
AC-28	0xAC1C	Measured voltage 1 of AI2 for expansion card 3	0.000 V to 12.000 V	2.000	V	Real-time
AC-29	0xAC1D	Displayed voltage 1 of AI2 for expansion card 3	0.000 V to 12.000 V	2.000	V	Real-time
AC-30	0xAC1E	Measured voltage 2 of AI2 for expansion card 3	0.000 V to 12.000 V	2.000	V	Real-time
AC-31	0xAC1F	Displayed voltage 2 of AI2 for expansion card 3	0.000 V to 12.000 V	2.000	V	Real-time
AE-00	0xAE00	Measured voltage 1 of local AI1	0.000 V to 12.000 V	2.000	V	Real-time
AE-01	0xAE01	Displayed voltage 1 of local AI1	0.000 V to 12.000 V	2.000	V	Real-time
AE-02	0xAE02	Measured voltage 2 of local AI1	0.000 V to 12.000 V	2.000	V	Real-time
AE-03	0xAE03	Displayed voltage 2 of local AI1	0.000 V to 12.000 V	2.000	V	Real-time
AE-04	0xAE04	Measured voltage 1 of local AI2	0.000 V to 12.000 V	2.000	V	Real-time
AE-05	0xAE05	Displayed voltage 1 of local AI2	0.000 V to 12.000 V	2.000	V	Real-time
AE-06	0xAE06	Measured voltage 2 of local AI2	0.000 V to 12.000 V	2.000	V	Real-time
AE-07	0xAE07	Displayed voltage 2 of local AI2	0.000 V to 12.000 V	2.000	V	Real-time
AE-08	0xAE08	Measured voltage 1 of AI1 for expansion card 1	0.000 V to 12.000 V	2.000	V	Real-time

Code	Communication Address	Name	Value Range	Default	Unit	Change Mode
AE-09	0xAE09	Displayed voltage 1 of AI1 for expansion card 1	0.000 V to 12.000 V	2.000	V	Real-time
AE-10	0xAE0A	Measured voltage 2 of AI1 for expansion card 1	0.000 V to 12.000 V	2.000	V	Real-time
AE-11	0xAE0B	Displayed voltage 2 of AI1 for expansion card 1	0.000 V to 12.000 V	2.000	V	Real-time
AE-12	0xAE0C	Measured voltage 1 of AI2 for expansion card 1	0.000 V to 12.000 V	2.000	V	Real-time
AE-13	0xAE0D	Displayed voltage 1 of AI2 for expansion card 1	0.000 V to 12.000 V	2.000	V	Real-time
AE-14	0xAE0E	Measured voltage 2 of AI2 for expansion card 1	0.000 V to 12.000 V	2.000	V	Real-time
AE-15	0xAE0F	Displayed voltage 2 of AI2 for expansion card 1	0.000 V to 12.000 V	2.000	V	Real-time
AE-16	0xAE10	Measured voltage 1 of AI1 for expansion card 2	0.000 V to 12.000 V	2.000	V	Real-time
AE-17	0xAE11	Displayed voltage 1 of AI1 for expansion card 2	0.000 V to 12.000 V	2.000	V	Real-time
AE-18	0xAE12	Measured voltage 2 of AI1 for expansion card 2	0.000 V to 12.000 V	2.000	V	Real-time
AE-19	0xAE13	Displayed voltage 2 of AI1 for expansion card 2	0.000 V to 12.000 V	2.000	V	Real-time
AE-20	0xAE14	Measured voltage 1 of AI2 for expansion card 2	0.000 V to 12.000 V	2.000	V	Real-time
AE-21	0xAE15	Displayed voltage 1 of AI2 for expansion card 2	0.000 V to 12.000 V	2.000	V	Real-time
AE-22	0xAE16	Measured voltage 2 of AI2 for expansion card 2	0.000 V to 12.000 V	2.000	V	Real-time
AE-23	0xAE17	Displayed voltage 2 of AI2 for expansion card 2	0.000 V to 12.000 V	2.000	V	Real-time
AE-24	0xAE18	Measured voltage 1 of AI1 for expansion card 3	0.000 V to 12.000 V	2.000	V	Real-time
AE-25	0xAE19	Displayed voltage 1 of AI1 for expansion card 3	0.000 V to 12.000 V	2.000	V	Real-time
AE-26	0xAE1A	AI1 Measured voltage 2 of AI1 for expansion card 3	0.000 V to 12.000 V	2.000	V	Real-time
AE-27	0xAE1B	Displayed voltage 2 of AI1 for expansion card 3	0.000 V to 12.000 V	2.000	V	Real-time
AE-28	0xAE1C	Measured voltage 1 of AI2 for expansion card 3	0.000 V to 12.000 V	2.000	V	Real-time
AE-29	0xAE1D	Displayed voltage 1 of AI2 for expansion card 3	0.000 V to 12.000 V	2.000	V	Real-time

Code	Communication Address	Name	Value Range	Default	Unit	Change Mode
AE-30	0xAE1E	Measured voltage 2 of AI2 for expansion card 3	0.000 V to 12.000 V	2.000	V	Real-time
AE-31	0xAE1F	Displayed voltage 2 of AI2 for expansion card 3	0.000 V to 12.000 V	2.000	V	Real-time
AF-00	0xAF00	RPDO1-SubIndex0-H	0–65535	0	-	Real-time
AF-01	0xAF01	RPDO1-SubIndex0-L	0–65535	0	-	Real-time
AF-02	0xAF02	RPDO1-SubIndex1-H	0–65535	0	-	Real-time
AF-03	0xAF03	RPDO1-SubIndex1-L	0–65535	0	-	Real-time
AF-04	0xAF04	RPDO1-SubIndex2-H	0–65535	0	-	Real-time
AF-05	0xAF05	RPDO1-SubIndex2-L	0–65535	0	-	Real-time
AF-06	0xAF06	RPDO1-SubIndex3-H	0–65535	0	-	Real-time
AF-07	0xAF07	RPDO1-SubIndex3-L	0–65535	0	-	Real-time
AF-08	0xAF08	RPDO2-SubIndex0-H	0–65535	0	-	Real-time
AF-09	0xAF09	RPDO2-SubIndex0-L	0–65535	0	-	Real-time
AF-10	0xAF0A	RPDO2-SubIndex1-H	0–65535	0	-	Real-time
AF-11	0xAF0B	RPDO2-SubIndex1-L	0–65535	0	-	Real-time
AF-12	0xAF0C	RPDO2-SubIndex2-H	0–65535	0	-	Real-time
AF-13	0xAF0D	RPDO2-SubIndex2-L	0–65535	0	-	Real-time
AF-14	0xAF0E	RPDO2-SubIndex3-H	0–65535	0	-	Real-time
AF-15	0xAF0F	RPDO2-SubIndex3-L	0–65535	0	-	Real-time
AF-16	0xAF10	RPDO3-SubIndex0-H	0–65535	0	-	Real-time
AF-17	0xAF11	RPDO3-SubIndex0-L	0–65535	0	-	Real-time
AF-18	0xAF12	RPDO3-SubIndex1-H	0–65535	0	-	Real-time
AF-19	0xAF13	RPDO3-SubIndex1-L	0–65535	0	-	Real-time
AF-20	0xAF14	RPDO3-SubIndex2-H	0–65535	0	-	Real-time
AF-21	0xAF15	RPDO3-SubIndex2-L	0–65535	0	-	Real-time
AF-22	0xAF16	RPDO3-SubIndex3-H	0–65535	0	-	Real-time
AF-23	0xAF17	RPDO3-SubIndex3-L	0–65535	0	-	Real-time
AF-24	0xAF18	RPDO4-SubIndex0-H	0–65535	0	-	Real-time
AF-25	0xAF19	RPDO4-SubIndex0-L	0–65535	0	-	Real-time
AF-26	0xAF1A	RPDO4-SubIndex1-H	0–65535	0	-	Real-time
AF-27	0xAF1B	RPDO4-SubIndex1-L	0–65535	0	-	Real-time
AF-28	0xAF1C	RPDO4-SubIndex2-H	0–65535	0	-	Real-time
AF-29	0xAF1D	RPDO4-SubIndex2-L	0–65535	0	-	Real-time
AF-30	0xAF1E	RPDO4-SubIndex3-H	0–65535	0	-	Real-time
AF-31	0xAF1F	RPDO4-SubIndex3-L	0–65535	0	-	Real-time
AF-32	0xAF20	TPDO1-SubIndexO-H	0–65535	0	-	Real-time
AF-33	0xAF21	TPDO1-SubIndexO-L	0–65535	0	-	Real-time
AF-34	0xAF22	TPDO1-SubIndex1-H	0–65535	0	-	Real-time
AF-35	0xAF23	TPDO1-SubIndex1-L	0–65535	0	-	Real-time
AF-36	0xAF24	TPDO1-SubIndex2-H	0–65535	0	-	Real-time
AF-37	0xAF25	TPDO1-SubIndex2-L	0–65535	0	-	Real-time
AF-38	0xAF26	TPDO1-SubIndex3-H	0–65535	0	-	Real-time
AF-39	0xAF27	TPDO1-SubIndex3-L	0–65535	0	-	Real-time

Code	Communication Address	Name	Value Range	Default	Unit	Change Mode
AF-40	0xAF28	TPDO2-SubIndex0-H	0–65535	0	-	Real-time
AF-41	0xAF29	TPDO2-SubIndex0-L	0–65535	0	-	Real-time
AF-42	0xAF2A	TPDO2-SubIndex1-H	0–65535	0	-	Real-time
AF-43	0xAF2B	TPDO2-SubIndex1-L	0–65535	0	-	Real-time
AF-44	0xAF2C	TPDO2-SubIndex2-H	0–65535	0	-	Real-time
AF-45	0xAF2D	TPDO2-SubIndex2-L	0–65535	0	-	Real-time
AF-46	0xAF2E	TPDO2-SubIndex3-H	0–65535	0	-	Real-time
AF-47	0xAF2F	TPDO2-SubIndex3-L	0–65535	0	-	Real-time
AF-48	0xAF30	TPDO3-SubIndex0-H	0–65535	0	-	Real-time
AF-49	0xAF31	TPDO3-SubIndex0-L	0–65535	0	-	Real-time
AF-50	0xAF32	TPDO3-SubIndex1-H	0–65535	0	-	Real-time
AF-51	0xAF33	TPDO3-SubIndex1-L	0–65535	0	-	Real-time
AF-52	0xAF34	TPDO3-SubIndex2-H	0–65535	0	-	Real-time
AF-53	0xAF35	TPDO3-SubIndex2-L	0–65535	0	-	Real-time
AF-54	0xAF36	TPDO3-SubIndex3-H	0–65535	0	-	Real-time
AF-55	0xAF37	TPDO3-SubIndex3-L	0–65535	0	-	Real-time
AF-56	0xAF38	TPDO4-SubIndex0-H	0–65535	0	-	Real-time
AF-57	0xAF39	TPDO4-SubIndex0-L	0–65535	0	-	Real-time
AF-58	0xAF3A	TPDO4-SubIndex1-H	0–65535	0	-	Real-time
AF-59	0xAF3B	TPDO4-SubIndex1-L	0–65535	0	-	Real-time
AF-60	0xAF3C	TPDO4-SubIndex2-H	0–65535	0	-	Real-time
AF-61	0xAF3D	TPDO4-SubIndex2-L	0–65535	0	-	Real-time
AF-62	0xAF3E	TPDO4-SubIndex3-H	0–65535	0	-	Real-time
AF-63	0xAF3F	TPDO4-SubIndex3-L	0–65535	0	-	Real-time
AF-66	0xAF42	Number of valid RPDOs	0–65535	0	-	Unchangeable
AF-67	0xAF43	Number of valid TPDOs	0–65535	0	-	Unchangeable
U0-00	0x7000	Bus voltage	0.0 V to 1000.0 V	0.0	V	Unchangeable
U0-01	0x7001	Heatsink temperature	-50°C to +150°C	0	°C	Unchangeable
U0-02	0x7002	Ambient temperature	-50°C to +150°C	0	°C	Unchangeable
U0-04	0x7004	Input voltage Usr	0 V to 1000 V	0	V	Unchangeable
U0-05	0x7005	Input voltage Ust	0 V to 1000 V	0	V	Unchangeable
U0-06	0x7006	Input voltage Utr	0 V to 1000 V	0	V	Unchangeable
U0-07	0x7007	Three-phase imbalance factor	0.00% to 100.00%	0.00	%	Unchangeable
U0-12	0x700C	Current fault code	0–99	0	-	Unchangeable
U0-13	0x700D	Current fault subcode	0–10	0	-	Unchangeable

Code	Communication Address	Name	Value Range	Default	Unit	Change Mode
U0-14	0x700E	Current alarm code	0–99	0	-	Unchangeable
U0-15	0x700F	Current alarm subcode	0–10	0	-	Unchangeable
U0-16	0x7010	Online module list	0–65535	0	-	Unchangeable
U0-17	0x7011	Number of online modules	0–65535	0	-	Unchangeable
U0-18	0x7012	Number of online I/O modules	0–65535	0	-	Unchangeable
U0-19	0x7013	Running status of power supply unit	0–2	0	-	Unchangeable
U0-20	0x7014	Current power-on time (hour)	0 h to 65535 h	0	h	Unchangeable
U0-21	0x7015	Current power-on time (minute)	0 min to 65535 min	0	min	Unchangeable
U0-22	0x7016	Current power-on time (second)	0s to 65535s	0	s	Unchangeable
U0-23	0x7017	Current power-on time (millisecond)	0 ms to 65535 ms	0	ms	Unchangeable
U0-25	0x7019	Control command word of braking unit	0–1	0	-	Unchangeable
U0-27	0x701B	Running prohibition flag	0–65535	0	-	Unchangeable
U0-30	0x701E	Total power-on time (hour)	0 h to 65535 h	0	h	Unchangeable
U0-31	0x701F	Total power-on time (minute)	0 min to 65535 min	0	min	Unchangeable
U0-32	0x7020	Total power-on time (second)	0s to 65535s	0	s	Unchangeable
U0-33	0x7021	Total power-on time (millisecond)	0 ms to 65535 ms	0	ms	Unchangeable
U0-35	0x7023	Power supply unit state	0–2	0	-	Unchangeable
U2-00	0x7200	Local I/O module type	0–65535	0	-	Unchangeable
U2-01	0x7201	Local I/O module version	0.00–655.35	0.00	-	Unchangeable
U2-02	0x7202	Original DI hardware resource for local I/O module	0–65535	0	-	Unchangeable
U2-03	0x7203	Available DI hardware resource for local I/O module	0–65535	0	-	Unchangeable

Code	Communication Address	Name	Value Range	Default	Unit	Change Mode
U2-04	0x7204	Original AI hardware resource for local I/O module	0–65535	0	-	Unchangeable
U2-05	0x7205	Available AI hardware resource for local I/O module	0–65535	0	-	Unchangeable
U2-06	0x7206	Original DO hardware resource for local I/O module	0–65535	0	-	Unchangeable
U2-07	0x7207	Available DO hardware resource for local I/O module	0–65535	0	-	Unchangeable
U2-08	0x7208	Original AO hardware resource for local I/O module	0–65535	0	-	Unchangeable
U2-09	0x7209	Available AO hardware resource for local I/O module	0–65535	0	-	Unchangeable
U2-10	0x720A	DI for local I/O module	0–65535	0	-	Unchangeable
U2-11	0x720B	DO for local I/O module	0–65535	0	-	Unchangeable
U2-12	0x720C	Local AI1 input (before correction)	-12.00 V to +12.00 V	0.00	V	Unchangeable
U2-13	0x720D	Local AI2 input (before correction)	-12.00 V to +12.00 V	0.00	V	Unchangeable
U2-14	0x720E	Local AI1 input (after correction)	-12.00 V to +12.00 V	0.00	V	Unchangeable
U2-15	0x720F	Local AI2 input (after correction)	-12.00 V to +12.00 V	0.00	V	Unchangeable
U2-20	0x7214	Local I/O module - Condition of DI1 used by drive unit	0–65535	0	-	Unchangeable
U2-21	0x7215	Local I/O module - Condition of DI2 used by drive unit	0–65535	0	-	Unchangeable
U2-22	0x7216	Local I/O module - Condition of DI3 used by drive unit	0–65535	0	-	Unchangeable
U2-23	0x7217	Local I/O module - Condition of DI4 used by drive unit	0–65535	0	-	Unchangeable
U2-24	0x7218	Local I/O module - Condition of DI5 used by drive unit	0–65535	0	-	Unchangeable

Code	Communication Address	Name	Value Range	Default	Unit	Change Mode
U2-25	0x7219	Local I/O module - Condition of DI6 used by drive unit	0–65535	0	-	Unchangeable
U2-26	0x721A	Local I/O module - Condition of DI7 used by drive unit	0–65535	0	-	Unchangeable
U2-27	0x721B	Local I/O module - Condition of DI8 used by drive unit	0–65535	0	-	Unchangeable
U2-30	0x721E	Local I/O module - Condition of AI1 used by drive unit	0–65535	0	-	Unchangeable
U2-31	0x721F	Local I/O module - Condition of AI2 used by drive unit	0–65535	0	-	Unchangeable
U2-40	0x7228	Local I/O module - Condition of DO1 used by drive unit	0–65535	0	-	Unchangeable
U2-41	0x7229	Local I/O module - Condition of DO2 used by drive unit	0–65535	0	-	Unchangeable
U2-42	0x722A	Local I/O module - Condition of DO3 used by drive unit	0–65535	0	-	Unchangeable
U2-43	0x722B	Local I/O module - Condition of DO4 used by drive unit	0–65535	0	-	Unchangeable
U2-44	0x722C	Local I/O module - Condition of DO5 used by drive unit	0–65535	0	-	Unchangeable
U2-45	0x722D	Local I/O module - Condition of DO6 used by drive unit	0–65535	0	-	Unchangeable
U2-46	0x722E	Local I/O module - Condition of DO7 used by drive unit	0–65535	0	-	Unchangeable
U2-47	0x722F	Local I/O module - Condition of DO8 used by drive unit	0–65535	0	-	Unchangeable
U3-00	0x7300	Type of I/O expansion card 1	0–65535	0	-	Unchangeable
U3-01	0x7301	Version of I/O expansion card 1	0.00–655.35	0.00	-	Unchangeable
U3-02	0x7302	Original DI hardware resource of I/O expansion card 1	0–65535	0	-	Unchangeable

Code	Communication Address	Name	Value Range	Default	Unit	Change Mode
U3-03	0x7303	Available DI hardware resource of I/O expansion card 1	0–65535	0	-	Unchangeable
U3-04	0x7304	Original AI hardware resource of I/O expansion card 1	0–65535	0	-	Unchangeable
U3-05	0x7305	Available AI hardware resource of I/O expansion card 1	0–65535	0	-	Unchangeable
U3-06	0x7306	Original DO hardware resource of I/O expansion card 1	0–65535	0	-	Unchangeable
U3-07	0x7307	Available DO hardware resource of I/O expansion card 1	0–65535	0	-	Unchangeable
U3-08	0x7308	Original AO hardware resource of I/O expansion card 1	0–65535	0	-	Unchangeable
U3-09	0x7309	Available AO hardware resource of I/O expansion card 1	0–65535	0	-	Unchangeable
U3-10	0x730A	DI of I/O expansion card 1	0–65535	0	-	Unchangeable
U3-11	0x730B	DO of I/O expansion card 1	0–65535	0	-	Unchangeable
U3-12	0x730C	AI1 input of I/O expansion card 1 (before correction)	-12.00 V to +12.00 V	0.00	V	Unchangeable
U3-13	0x730D	AI2 input of I/O expansion card 1 (before correction)	-12.00 V to +12.00 V	0.00	V	Unchangeable
U3-14	0x730E	AI1 input of I/O expansion card 1 (after correction)	-12.00 V to +12.00 V	0.00	V	Unchangeable
U3-15	0x730F	AI2 input of I/O expansion card 1 (after correction)	-12.00 V to +12.00 V	0.00	V	Unchangeable
U3-20	0x7314	Usage of I/O expansion card 1's DI1 by drive unit	0–65535	0	-	Unchangeable
U3-21	0x7315	Usage of I/O expansion card 1's DI2 by drive unit	0–65535	0	-	Unchangeable
U3-22	0x7316	Usage of I/O expansion card 1's DI3 by drive unit	0–65535	0	-	Unchangeable
U3-23	0x7317	Usage of I/O expansion card 1's DI4 by drive unit	0–65535	0	-	Unchangeable

Code	Communication Address	Name	Value Range	Default	Unit	Change Mode
U3-24	0x7318	Usage of I/O expansion card 1's DI5 by drive unit	0–65535	0	-	Unchangeable
U3-25	0x7319	Usage of I/O expansion card 1's DI6 by drive unit	0–65535	0	-	Unchangeable
U3-26	0x731A	Usage of I/O expansion card 1's DI7 by drive unit	0–65535	0	-	Unchangeable
U3-27	0x731B	Usage of I/O expansion card 1's DI8 by drive unit	0–65535	0	-	Unchangeable
U3-30	0x731E	Usage of I/O expansion card 1's AI1 by drive unit	0–65535	0	-	Unchangeable
U3-31	0x731F	Usage of I/O expansion card 1's AI2 by drive unit	0–65535	0	-	Unchangeable
U3-40	0x7328	Usage of I/O expansion card 1's DO1 by drive unit	0–65535	0	-	Unchangeable
U3-41	0x7329	Usage of I/O expansion card 1's DO2 by drive unit	0–65535	0	-	Unchangeable
U3-42	0x732A	Usage of I/O expansion card 1's DO3 by drive unit	0–65535	0	-	Unchangeable
U3-43	0x732B	Usage of I/O expansion card 1's DO4 by drive unit	0–65535	0	-	Unchangeable
U3-44	0x732C	Usage of I/O expansion card 1's DO5 by drive unit	0–65535	0	-	Unchangeable
U3-45	0x732D	Usage of I/O expansion card 1's DO6 by drive unit	0–65535	0	-	Unchangeable
U3-46	0x732E	Usage of I/O expansion card 1's DO7 by drive unit	0–65535	0	-	Unchangeable
U3-47	0x732F	Usage of I/O expansion card 1's DO8 by drive unit	0–65535	0	-	Unchangeable
U4-00	0x7400	Type of I/O expansion card 2	0–65535	0	-	Unchangeable
U4-01	0x7401	Version of I/O expansion card 2	0.00–655.35	0.00	-	Unchangeable
U4-02	0x7402	Original DI hardware resource of I/O expansion card 2	0–65535	0	-	Unchangeable
U4-03	0x7403	Available DI hardware resource of I/O expansion card 2	0–65535	0	-	Unchangeable

Code	Communication Address	Name	Value Range	Default	Unit	Change Mode
U4-04	0x7404	Original AI hardware resource of I/O expansion card 2	0–65535	0	-	Unchangeable
U4-05	0x7405	Available AI hardware resource of I/O expansion card 2	0–65535	0	-	Unchangeable
U4-06	0x7406	Original DO hardware resource of I/O expansion card 2	0–65535	0	-	Unchangeable
U4-07	0x7407	Available DO hardware resource of I/O expansion card 2	0–65535	0	-	Unchangeable
U4-08	0x7408	Original AO hardware resource of I/O expansion card 2	0–65535	0	-	Unchangeable
U4-09	0x7409	Available AO hardware resource of I/O expansion card 2	0–65535	0	-	Unchangeable
U4-10	0x740A	DI of I/O extension card 2	0–65535	0	-	Unchangeable
U4-11	0x740B	DO of I/O extension card 2	0–65535	0	-	Unchangeable
U4-12	0x740C	AI1 input of I/O expansion card 2 (before correction)	-12.00 V to +12.00 V	0.00	V	Unchangeable
U4-13	0x740D	AI2 input of I/O expansion card 2 (before correction)	-12.00 V to +12.00 V	0.00	V	Unchangeable
U4-14	0x740E	AI1 input of I/O expansion card 2 (after correction)	-12.00 V to +12.00 V	0.00	V	Unchangeable
U4-15	0x740F	AI2 input of I/O expansion card 2 (after correction)	-12.00 V to +12.00 V	0.00	V	Unchangeable
U4-20	0x7414	Usage of I/O expansion card 2's DI1 by drive unit	0–65535	0	-	Unchangeable
U4-21	0x7415	Usage of I/O expansion card 2's DI2 by drive unit	0–65535	0	-	Unchangeable
U4-22	0x7416	Usage of I/O expansion card 2's DI3 by drive unit	0–65535	0	-	Unchangeable
U4-23	0x7417	Usage of I/O expansion card 2's DI4 by drive unit	0–65535	0	-	Unchangeable
U4-24	0x7418	Usage of I/O expansion card 2's DI5 by drive unit	0–65535	0	-	Unchangeable

Code	Communication Address	Name	Value Range	Default	Unit	Change Mode
U4-25	0x7419	Usage of I/O expansion card 2's DI6 by drive unit	0–65535	0	-	Unchangeable
U4-26	0x741A	Usage of I/O expansion card 2's DI7 by drive unit	0–65535	0	-	Unchangeable
U4-27	0x741B	Usage of I/O expansion card 2's DI8 by drive unit	0–65535	0	-	Unchangeable
U4-30	0x741E	Usage of I/O expansion card 2's AI1 by drive unit	0–65535	0	-	Unchangeable
U4-31	0x741F	Usage of I/O expansion card 2's AI2 by drive unit	0–65535	0	-	Unchangeable
U4-40	0x7428	Usage of I/O expansion card 2's DO1 by drive unit	0–65535	0	-	Unchangeable
U4-41	0x7429	Usage of I/O expansion card 2's DO2 by drive unit	0–65535	0	-	Unchangeable
U4-42	0x742A	Usage of I/O expansion card 2's DO3 by drive unit	0–65535	0	-	Unchangeable
U4-43	0x742B	Usage of I/O expansion card 2's DO4 by drive unit	0–65535	0	-	Unchangeable
U4-44	0x742C	Usage of I/O expansion card 2's DO5 by drive unit	0–65535	0	-	Unchangeable
U4-45	0x742D	Usage of I/O expansion card 2's DO6 by drive unit	0–65535	0	-	Unchangeable
U4-46	0x742E	Usage of I/O expansion card 2's DO7 by drive unit	0–65535	0	-	Unchangeable
U4-47	0x742F	Usage of I/O expansion card 2's DO8 by drive unit	0–65535	0	-	Unchangeable

4.6 Parameter List for the Drive Unit

Table 4–2 Parameter list for the drive unit

Code	Communication Address	Name	Value Range	Default	Unit	Change Mode
F0-00	0xF000	G and P type display	1: G type (constant torque load) 2: P type (fan and pump)	1	-	Unchangeable
F0-01	0xF001	Motor 1 control mode	0: SVC 1: Reserved	2	-	At stop

Code	Communication Address	Name	Value Range	Default	Unit	Change Mode
			2: V/f control 3: Reserved 4: Reserved 5: VC++			
F0-02	0xF002	Command source	0: Operating panel of the power supply unit/SOP-20 operating panel/Software 1: Terminal 2: Communication command	0	-	At stop
F0-03	0xF003	Main frequency source X	0: Digital setting (F0-08, can be changed by UP/DOWN keys, non-retentive upon power failure) 1: Digital setting (F0-08, can be changed by UP/DOWN keys, retentive upon power failure) 2: AI1 3: AI2 4: AI3 5: Reserved 6: Multi-reference 7: Simple PLC 8: PID 9: Communication command 10: Reserved	0	-	At stop
F0-04	0xF004	Auxiliary frequency source Y	0: Digital setting (F0-08, can be changed by UP/DOWN keys, non-retentive upon power failure) 1: Digital setting (F0-08, can be changed by UP/DOWN keys, retentive upon power failure) 2: AI1 3: AI2 4: AI3 5: Reserved 6: Multi-reference 7: Simple PLC 8: PID 9: Communication command 10: Reserved	0	-	At stop
F0-05	0xF005	Base value of range of auxiliary frequency source Y upon superposition	0: Relative to the maximum frequency 1: Relative to the main frequency source X	0	-	Real-time
F0-06	0xF006	Range of auxiliary frequency reference Y upon superposition	0% to 150%	100	%	Real-time

Code	Communication Address	Name	Value Range	Default	Unit	Change Mode
F0-07	0xF007	Frequency source superposition	Ones: 0: Main frequency source X 1: Calculation result (determined by tens position) 2: Switchover between main frequency source X and auxiliary frequency source Y 3: Switchover between main frequency source X and calculation result 4: Switchover between auxiliary frequency source Y and calculation result Tens: 0: Main + Auxiliary 1: Main - Auxiliary 2: Max. (main, auxiliary) 3: Min. (main, auxiliary) 4: Main x auxiliary	0	-	Real-time
F0-08	0xF008	Preset frequency	0.00 Hz to 600.00 Hz	50.00	Hz	Real-time
F0-09	0xF009	Running direction	0: Same as default direction 1: Reverse to default direction	0	-	Real-time
F0-10	0xF00A	Maximum frequency	50.00 Hz to 600.00 Hz	50.00	Hz	At stop
F0-11	0xF00B	Frequency upper limit source	0: Set by F0-12 (Frequency upper limit) 1: AI1 2: AI2 3: AI3 4: Reserved 5 Communication setting 6: Multi-speed reference	0	-	At stop
F0-12	0xF00C	Frequency upper limit	0.00 Hz to 600.00 Hz	50.00	Hz	Real-time
F0-13	0xF00D	Frequency upper limit offset	0.00 Hz to 600.00 Hz	0.00	Hz	Real-time
F0-14	0xF00E	Frequency lower limit	0.00 Hz to 600.00 Hz	0.00	Hz	Real-time
F0-15	0xF00F	Carrier frequency	0.8 kHz to 15.0 kHz	6.0	kHz	Real-time
F0-16	0xF010	Carrier frequency changing with temperature	0: No 1: Yes	1	-	Real-time
F0-17	0xF011	Acceleration time 1	0.0s to 6500.0s	20.0	s	Real-time
F0-18	0xF012	Deceleration time 1	0.0s to 6500.0s	20.0	s	Real-time
F0-19	0xF013	Acceleration/Deceleration time unit	0: 1s 1: 0.1s 2: 0.01s	1	-	At stop

Code	Communication Address	Name	Value Range	Default	Unit	Change Mode
F0-21	0xF015	Offset of auxiliary frequency source during superposition	0.00 Hz to 655.35 Hz	0.00	Hz	Real-time
F0-22	0xF016	Frequency reference resolution	1: 0.1 Hz 2: 0.01 Hz	2	Hz	At stop
F0-23	0xF017	Retention of frequency by digital setting upon stop	0: Non-retentive 1: Retentive	0	-	Real-time
F0-25	0xF019	Acceleration/Deceleration time base frequency	0: Maximum frequency (F0-10) 1: Frequency reference 2: 100 Hz	0	-	At stop
F0-26	0xF01A	Base of frequency adjusted by UP/DOWN keys during running	0: Running frequency 1: Frequency reference	0	-	At stop
F0-27	0xF01B	Main frequency coefficient	0.00% to 100.00%	10.00	%	Real-time
F0-28	0xF01C	Auxiliary frequency coefficient	0.00% to 100.00%	10.00	%	Real-time
F0-29	0xF01D	G and P type	1: G type (constant torque load) 2: P type (fan and pump)	1	-	At stop
F1-00	0xF100	Motor type	0: Common asynchronous motor 1: Variable frequency asynchronous motor 2: Synchronous motor	0	-	At stop
F1-01	0xF101	Rated motor power	0.1 kW to 1000.0 kW	3.7	kW	At stop
F1-02	0xF102	Rated motor voltage	1 V to 2000 V	380	V	At stop
F1-03	0xF103	Rated motor current	0.1 A to 6553.5 A	9.0	A	At stop
F1-04	0xF104	Rated motor frequency	0.01 Hz to 655.35 Hz	50.00	Hz	At stop
F1-05	0xF105	Rated motor speed	1 RPM to 65535 RPM	1460	RPM	At stop
F1-06	0xF106	Asynchronous motor stator resistance	0.001 Ω to 65.535 Ω	1.204	Ω	At stop
F1-07	0xF107	Asynchronous motor rotor resistance	0.001 Ω to 65.535 Ω	0.908	Ω	At stop
F1-08	0xF108	Leakage inductive reactance of asynchronous motor	0.01 mH to 655.35 mH	5.28	mH	At stop
F1-09	0xF109	Mutual inductive reactance of asynchronous motor	0.01 mH to 655.35 mH	156.8	mH	At stop
F1-10	0xF10A	No-load current of asynchronous motor	0.1 A to 6553.5 A	4.2	A	At stop
F1-11	0xF10B	Core saturation coefficient 1 of asynchronous motor	50.0% to 100.0%	86.0	%	Real-time
F1-12	0xF10C	Core saturation coefficient 2 of asynchronous motor	100.0% to 150.0%	130.0	%	Real-time

Code	Communication Address	Name	Value Range	Default	Unit	Change Mode
F1-13	0xF10D	Core saturation coefficient 3 of asynchronous motor	100.0% to 170.0%	140.0	%	Real-time
F1-14	0xF10E	Core saturation coefficient 4 of asynchronous motor	100.0% to 180.0%	150.0	%	Real-time
F1-17	0xF111	Axis D inductance of synchronous motor	1.00 mH to 65535.00 mH	1586.00	mH	At stop
F1-18	0xF112	Axis Q inductance of synchronous motor	1.00 mH to 65535.00 mH	1586.00	mH	At stop
F1-19	0xF113	Back EMF coefficient of synchronous motor	0.0 V to 6553.5 V	0.0	V	At stop
F1-24	0xF118	Number of motor pole pairs	0 to 65535	0	-	Unchangeable
F1-37	0xF125	Auto-tuning	0: No auto-tuning 1: Static auto-tuning on parameters of asynchronous motors 2: Auto-tuning on all parameters of asynchronous motors 3: With-load auto-tuning on all parameters of asynchronous motors 4: Reserved 11: No-load auto-tuning on some parameters (excluding back EMF) of synchronous motors 12: No-load dynamic auto-tuning on parameters of synchronous motors 13: Static auto-tuning on all parameters of synchronous motors 14: Reserved	0	-	At stop
F2-00	0xF200	Low speed loop Kp	1 to 200	30	-	Real-time
F2-01	0xF201	Low speed loop Ti	0.001s to 10.000s	0.500	s	Real-time
F2-02	0xF202	Switchover frequency 1	0.00 Hz to 655.35 Hz	5.00	Hz	Real-time
F2-03	0xF203	High speed loop Kp	1 to 200	20	-	Real-time
F2-04	0xF204	High speed loop Ti	0.001s to 10.000s	1.000	s	Real-time
F2-05	0xF205	Switchover frequency 2	0.00 Hz to 655.35 Hz	10.00	Hz	Real-time
F2-06	0xF206	VC slip compensation gain	50% to 200%	100	%	Real-time
F2-07	0xF207	Speed feedback filter time	0.000s to 0.100s	0.004	s	Real-time

Code	Communication Address	Name	Value Range	Default	Unit	Change Mode
F2-08	0xF208	VC deceleration over-excitation gain	0–200	64	-	Real-time
F2-09	0xF209	Torque upper limit source in speed control (motoring)	0: Digital setting (F2-10) 1: AI1 2: AI2 3: AI3 4: Reserved 5: Communication setting 6: Min. (AI1, AI2) 7: Max. (AI1, AI2)	0	-	Real-time
F2-10	0xF20A	Setting of torque upper limit in speed control (motoring)	0.0% to 200.0%	150.0	%	Real-time
F2-11	0xF20B	Torque upper limit source in speed control (generating)	0: Digital setting (F2-10) 1: AI1 2: AI2 3: AI3 4: Reserved 5: Communication setting 6: Min. (AI1, AI2) 7: Max. (AI1, AI2) 8: Digital setting (F2-12)	0	-	Real-time
F2-12	0xF20C	Setting of torque upper limit in speed control (generating)	0.0% to 200.0%	150.0	%	Real-time
F2-13	0xF20D	Current loop Kp adjustment at low speed	0.1–10.0	1.0	-	Real-time
F2-14	0xF20E	Current loop Ki adjustment at low speed	0.1–10.0	1.0	-	Real-time
F2-15	0xF20F	Current loop Kp adjustment at high speed	0.1–10.0	1.0	-	Real-time
F2-16	0xF210	Current loop Ki adjustment at high speed	0.1–10.0	1.0	-	Real-time
F2-17	0xF211	Speed loop Kp upon zero speed lock	1–100	30	-	Real-time
F2-18	0xF212	Speed loop Ki upon zero speed lock	0.001s to 10.000s	0.500	s	Real-time
F2-20	0xF214	Speed loop switchover frequency upon zero speed lock	0.00 Hz to 655.35 Hz	0.05	Hz	Real-time
F2-21	0xF215	Maximum output voltage coefficient	100–110	100	-	Real-time
F2-22	0xF216	Output voltage filter time	0.000s to 0.010s	0.000	s	Real-time
F2-23	0xF217	Zero speed lock	0: Disable 1: Enable	0	-	At stop

Code	Communication Address	Name	Value Range	Default	Unit	Change Mode
F2-24	0xF218	Overvoltage suppression Kp in vector control mode	0–1000	40	-	Real-time
F2-25	0xF219	Acceleration compensation gain	0–200	0	-	Real-time
F2-26	0xF21A	Acceleration compensation filter time	0–500	10	-	Real-time
F2-27	0xF21B	Overvoltage suppression in vector control mode	0: Disable 1: Enable	1	-	Real-time
F2-28	0xF21C	Cut-off frequency of torque filter	50 Hz to 1000 Hz	500	Hz	Real-time
F2-29	0xF21D	Current detected at initial position angle of synchronous motor	50–180	80	-	Real-time
F2-30	0xF21E	Auto-calculation of speed loop parameters	0: Disable 1: Enable	0	-	At stop
F2-31	0xF21F	Expected speed loop bandwidth at high speed	1.0 Hz to 200.0 Hz	10.0	Hz	Real-time
F2-32	0xF220	Expected speed loop bandwidth at low speed	1.0 Hz to 200.0 Hz	10.0	Hz	Real-time
F2-33	0xF221	Expected speed loop bandwidth at zero speed	1.0 Hz to 200.0 Hz	10.0	Hz	Real-time
F2-34	0xF222	Expected speed loop damping ratio (unchanged generally)	0.100–65.000	1.000	-	Real-time
F2-52	0xF234	Decoupling control	0: Disable 1: Enable	0	-	At stop
F2-53	0xF235	Power limit during generating	0: Disable 1: Enable	0	-	At stop
F2-54	0xF236	Generating power limit	0.0% to 200.0%	0.0	%	At stop
F2-55	0xF237	Flux closed loop mode	Ones: Reserved Tens: Reserved Hundreds: Reserved Thousands: Torque base value 0: Rated motor current 1: Rated motor torque current	1010	-	At stop
F2-56	0xF238	Output current upper limit of AC drive	0.0% to 170.0%	150.0	%	At stop
F3-00	0xF300	V/f curve setting	0: Linear V/f curve 1: Multi-point V/f curve 2: Square V/f curve 3: 1.2-power V/f curve 4: 1.4-power V/f curve 6: 1.6-power V/f curve	0	-	At stop

Code	Communication Address	Name	Value Range	Default	Unit	Change Mode
			8: 1.8-power V/f curve 10: V/f complete separation mode 11: V/f half separation mode			
F3-01	0xF301	Torque boost	0.0% to 30.0%	0.0	%	Real-time
F3-02	0xF302	Cutoff frequency of torque boost	0.00 Hz to 655.35 Hz	50.00	Hz	At stop
F3-03	0xF303	Multi-point V/f frequency 1	0.00 Hz to 655.35 Hz	0.00	Hz	At stop
F3-04	0xF304	Multi-point V/f voltage 1	0.0% to +100.0%	0.0	%	At stop
F3-05	0xF305	Multi-point V/f frequency 2	0.00 Hz to 655.35 Hz	0.00	Hz	At stop
F3-06	0xF306	Multi-point V/f voltage 2	0.0% to 100.0%	0.0	%	At stop
F3-07	0xF307	Multi-point V/f frequency 3	0.00 Hz to 655.35 Hz	0.00	Hz	At stop
F3-08	0xF308	Multi-point V/f voltage 3	0.0% to 100.0%	0.0	%	At stop
F3-09	0xF309	V/f slip compensation gain	0.0% to 200.0%	0.0	%	Real-time
F3-10	0xF30A	V/f over-excitation gain	0–200	64	-	Real-time
F3-11	0xF30B	V/f oscillation suppression gain	0–100	0	-	Real-time
F3-12	0xF30C	Oscillation suppression gain	0: Invalid 3: Valid	3	-	At stop
F3-13	0xF30D	Voltage source for V/f separation	0: Digital setting (F3-14) 1: AI1 2: AI2 3: AI3 4: Reserved 5: Multi-reference 6: Simple PLC 7: PID 8 Communication setting	0	-	Real-time
F3-14	0xF30E	Voltage digital setting for V/f separation	0 V to 65535 V	0	V	Real-time
F3-15	0xF30F	Voltage acceleration time for V/f separation	0.0s to 1000.0s	0.0	s	Real-time
F3-16	0xF310	Voltage deceleration time for V/f separation	0.0s to 1000.0s	0.0	s	Real-time
F3-17	0xF311	Stop mode for V/f separation	0: Frequency and voltage decline to 0. 1: Frequency declines to 0 after voltage declines to 0.	0	-	At stop
F3-18	0xF312	Action current for V/f overcurrent stall	50% to 180%	150	%	At stop
F3-19	0xF313	V/f overcurrent stall	0: Disable 1: Enable	1	-	At stop
F3-20	0xF314	V/f overcurrent stall suppression gain	0–100	20	-	Real-time

Code	Communication Address	Name	Value Range	De fault	Unit	Change Mode
F3-21	0xF315	Action current compensation coefficient for V/f speed overcurrent stall	50–180	50	-	At stop
F3-22	0xF316	V/f overvoltage stall action voltage	330.0 V to 800.0 V	770.0	V	At stop
F3-23	0xF317	V/f overvoltage stall	0: Disable 1: Enable	1	-	At stop
F3-24	0xF318	Suppression frequency gain for V/f overvoltage stall	0–100	30	-	Real-time
F3-25	0xF319	Suppression voltage gain for V/f overvoltage stall	0–100	30	-	Real-time
F3-26	0xF31A	Frequency rise threshold during overvoltage stall	0–50	5	-	At stop
F3-27	0xF31B	Slip compensation time constant	0.1–10.0	0.5	-	Real-time
F3-28	0xF31C	Automatic frequency rise	0: Disable 1: Enable	0	-	At stop
F3-29	0xF31D	Minimum motoring torque current	10 to 100	50	-	At stop
F3-30	0xF31E	Maximum generating torque current	10 to 100	20	-	At stop
F3-31	0xF31F	Automatic frequency rise Kp	0–100	50	-	Real-time
F3-32	0xF320	Automatic frequency rise Ki	0–100	50	-	Real-time
F3-33	0xF321	Online torque compensation gain	80–150	100	-	At stop
F3-34	0xF322	Slip startup	0–1	0	-	At stop
F3-35	0xF323	Slip startup threshold	0–50	10	-	Real-time
F3-36	0xF324	Slip startup Kp	0.0–200.0	10.0	-	Real-time
F3-37	0xF325	Slip startup Ki	0.00–500.00	1.00	-	Real-time
F3-38	0xF326	Current at slip startup	0–200	180	-	Real-time
F4-00	0xF400	DI1 hardware source	0: No selection 1: Power supply unit - DI1 2: Power supply unit - DI2 3: Power supply unit - DI3 4: Power supply unit - DI4 5: Power supply unit - DIO1 6: Power supply unit - DIO2 7: Power supply unit - DIO3 8: Power supply unit - DIO4 101: Expansion card 1 - DI1 102: Expansion card 1 - DI2 103: Expansion card 1 - DI3	0	-	At stop

Code	Communication Address	Name	Value Range	Default	Unit	Change Mode
			104: Expansion card 1 - DI4 105: Expansion card 1 - DI5 106: Expansion card 1 - DI6 107: Expansion card 1 - DI7 108: Expansion card 1 - DI8 201: Expansion card 2 - DI1 202: Expansion card 2 - DI2 203: Expansion card 2 - DI3 204: Expansion card 2 - DI4 205: Expansion card 2 - DI5 206: Expansion card 2 - DI6 207: Expansion card 2 - DI7 208: Expansion card 2 - DI8			
F4-01	0xF401	DI1 function	0: No function 1: Forward run (FWD) 2: Reverse run (REV) 3: Three-wire motion control 4: Forward jog (FJOG) 5: Reverse jog (RJOG) 6: Same as the UP key 7: Same as the DOWN key 8: Clear information set by UP/DOWN keys on the operating panel or by terminals functioning as the UP/DOWN keys 9: Fault reset (RESET) 10: External fault NO input 11: External fault NC input 12: User-defined fault 1 13: User-defined fault 2 14: Multi-reference terminal 1 15: Multi-reference terminal 2 16: Multi-reference terminal 3 17: Multi-reference terminal 4 18: Acceleration/Deceleration terminal 1 19: Acceleration/Deceleration terminal 2 20: Acceleration/Deceleration prohibition 21: Command source switchover terminal 1 22: Command source switchover terminal 2 23: Frequency reference switchover	1	-	At stop

Code	Communication Address	Name	Value Range	Default	Unit	Change Mode
			24:Switchover between main frequency reference X and preset frequency 25: Switchover between auxiliary frequency reference Y and preset frequency 26: Frequency modification enable 27: Counter input 28: Counter reset 29: Length input 30: Length reset			
F4-01	0xF401	DI1 function	31: PID pause 32: PID integral pause 33: PID parameter switchover 34: PID action direction reverse 35: Torque control prohibition 36: Speed control/Torque control switchover 38: Speed tracking enable 39: Immediate DC braking 40: Deceleration DC braking 41: External stop terminal 1 42: External stop terminal 2 43: Running pause 44: Coast to stop 45: Emergency stop 46: Motor selection terminal 47: Current running time clear 48: Two-wire/Three-wire motion control switchover 49: PLC state reset 50: Wobble pause 94: Braking feedback 1 95: Braking feedback 2	1	-	At stop
F4-02	0xF402	DI2 hardware source	Same as F4–00	0	-	At stop
F4-03	0xF403	DI2 function	Same as F4–01	4	-	At stop
F4-04	0xF404	DI3 hardware source	Same as F4–00	0	-	At stop
F4-05	0xF405	DI3 function	Same as F4–01	9	-	At stop
F4-06	0xF406	DI4 hardware source	Same as F4–00	0	-	At stop
F4-07	0xF407	DI4 function	Same as F4–01	14	-	At stop
F4-08	0xF408	DI5 hardware source	Same as F4–00	0	-	At stop
F4-09	0xF409	DI5 function	Same as F4–01	15	-	At stop
F4-10	0xF40A	DI6 hardware source	Same as F4–00	0	-	At stop
F4-11	0xF40B	DI6 function	Same as F4–01	0	-	At stop
F4-12	0xF40C	DI7 hardware source	Same as F4–00	0	-	At stop

Code	Communication Address	Name	Value Range	Default	Unit	Change Mode
F4-13	0xF40D	DI7 function	Same as F4–01	0	-	At stop
F4-14	0xF40E	DI8 hardware source	Same as F4–00	0	-	At stop
F4-15	0xF40F	DI8 function	Same as F4–01	0	-	At stop
F4-17	0xF411	Terminal command mode	0: Two-wire mode 1 1: Two-wire mode 2 2: Three-wire mode 1 3: Three-wire mode 2	0	-	At stop
F4-18	0xF412	Change rate of the terminal functioning as UP/DOWN keys	0.001–65.535 Hz/s	1.000	Hz/s	Real-time
F4-19	0xF413	DI1 delay	0.0s to 3600.0s	0.0	s	Real-time
F4-20	0xF414	DI2 delay	0.0s to 3600.0s	0.0	s	Real-time
F4-21	0xF415	DI3 delay	0.0s to 3600.0s	0.0	s	Real-time
F4-22	0xF416	DI valid mode settings 1	Ones: 0: Active high 1: Active low Tens: 0: Active high 1: Active low Hundreds: 0: Active high 1: Active low Thousands: 0: Active high 1: Active low Ten thousands: 0: Active high 1: Active low	0	-	At stop
F4-23	0xF417	DI valid mode settings 2	Ones: 0: Active high 1: Active low Tens: 0: Active high 1: Active low Hundreds: 0: Active high 1: Active low Thousands: 0: Reserved Ten thousands: 0: Reserved	0	-	At stop
F4-25	0xF419	AI1 hardware source	0: No selection 1: AI1 of power supply unit 2: AI2 of power supply unit 101: AI1 of expansion card 1 102: AI2 of expansion card 1 201: AI1 of expansion card 2	0	-	At stop

Code	Communication Address	Name	Value Range	Default	Unit	Change Mode
			202: AI2 of expansion card 2			
F4-27	0xF41B	AI2 hardware source	0: No selection 1: AI1 of power supply unit 2: AI2 of power supply unit 101: AI1 of expansion card 1 102: AI2 of expansion card 1 201: AI1 of expansion card 2 202: AI2 of expansion card 2	0	-	At stop
F4-29	0xF41D	AI3 hardware source	0: No selection 1: AI1 of power supply unit 2: AI2 of power supply unit 101: AI1 of expansion card 1 102: AI2 of expansion card 1 201: AI1 of expansion card 2 202: AI2 of expansion card 2	0	-	At stop
F4-31	0xF41F	Minimum input of AI curve 1	-10.00 V to +10.00 V	0.00	V	Real-time
F4-32	0xF420	Percentage corresponding to minimum input of AI curve 1	-100.0% to +100.0%	0.0	%	Real-time
F4-33	0xF421	Maximum input of AI curve 1	-10.00 V to +10.00 V	10.00	V	Real-time
F4-34	0xF422	Percentage corresponding to maximum input of AI curve 1	-100.0% to +100.0%	100.0	%	Real-time
F4-35	0xF423	Minimum input of AI curve 2	-10.00 V to +10.00 V	0.00	V	Real-time
F4-36	0xF424	Percentage corresponding to minimum input of AI curve 2	-100.0% to +100.0%	0.0	%	Real-time
F4-37	0xF425	Maximum input of AI curve 2	-10.00 V to +10.00 V	10.00	V	Real-time
F4-38	0xF426	Percentage corresponding to maximum input of AI curve 2	-100.0% to +100.0%	100.0	%	Real-time
F4-39	0xF427	Minimum input of AI curve 3	-10.00 V to +10.00 V	0.00	V	Real-time
F4-40	0xF428	Percentage corresponding to minimum input of AI curve 3	-100.0% to +100.0%	0.0	%	Real-time
F4-41	0xF429	Maximum input of AI curve 3	-10.00 V to +10.00 V	10.00	V	Real-time
F4-42	0xF42A	Percentage corresponding to maximum input of AI curve 3	-100.0% to +100.0%	100.0	%	Real-time
F4-48	0xF430	AI curve	Ones: 1: Curve 1 (2 points)	801	-	Real-time

Code	Communication Address	Name	Value Range	Default	Unit	Change Mode
			2: Curve 2 (2 points) 3: Curve 3 (2 points) 4: Curve 4 (4 points) 5: Curve 5 (4 points) Tens: 1: Curve 1 (2 points) 2: Curve 2 (2 points) 3: Curve 3 (2 points) 4: Curve 4 (4 points) 5: Curve 5 (4 points) Hundreds: 1: Curve 1 (2 points) 2: Curve 2 (2 points) 3: Curve 3 (2 points) 4: Curve 4 (4 points) 5: Curve 5 (4 points)			
F4-49	0xF431	Setting for AI lower than the minimum input	Ones: 0: Percentage corresponding to the minimum input 1: 0.0% Tens: 0: Percentage corresponding to the minimum input 1: 0.0% Hundreds: 0: Percentage corresponding to the minimum input 1: 0.0%	0	-	Real-time
F5-00	0xF500	DO1/RO1 hardware source	0: No selection 1: Power supply unit - DIO1 2: Power supply unit - DIO2 3: Power supply unit - DIO3 4: Power supply unit - DIO4 5: Power supply unit - RO1 101: Expansion card 1 - DO1/RO1 102: Expansion card 1 - DO2/RO2 103: Expansion card 1 - DO3/RO3 104: Expansion card 1 - DO4/RO4 105: Expansion card 1 - DO5/RO5 106: Expansion card 1 - DO6/RO6 107: Expansion card 1 - DO7/RO7 108: Expansion card 1 - DO8/RO8 201: Expansion card 2 - DO1/RO1 202: Expansion card 2 - DO2/RO2 203: Expansion card 2 - DO3/RO3 204: Expansion card 2 - DO4/RO4 205: Expansion card 2 - DO5/RO5 206: Expansion card 2 - DO6/RO6	0	-	Real-time

Code	Communication Address	Name	Value Range	Default	Unit	Change Mode
			207: Expansion card 2 - DO7/RO7 208: Expansion card 2 - DO8/RO8			
F5-01	0xF501	DO1/RO1 output function	0: No output 1: AC drive in running 2: Ready to run 3: Fault 1 (stop upon fault) 4: Fault 2 5: Fault 3 6: Abnormality (output upon fault or alarm) 7: Motor overload warning 8: AC drive overload warning 9: Motor overheat warning 10: AC drive load loss 11: Undervoltage 12: Output current overrange 13: Frequency detection value 1 (FDT1) 14: Frequency detection value 2 (FDT2) 15: Detection frequency 16: Detection frequency 1 17: Detection frequency 2 18: Frequency upper limit 19: Frequency lower limit (output at stop) 20: Frequency lower limit (no output at stop) 21: Preset running time 22: Accumulative power-on time 23: Accumulative running time 24: Current running time 25: Zero current state 26: Current 1 27: Current 2 28: Module temperature Reference count value 30: Designated count value	3	-	Real-time
F5-01	0xF501	DO1/RO1 output function	31: Length 32: Frequency limit 33: Torque limit 34: AI1 input overrange 35: AI1 > AI2 36: PLC cycle 37: Communication setting 38: STO-EDM 39: Reserved	3	-	Real-time

Code	Communication Address	Name	Value Range	Default	Unit	Change Mode
			40: Zero-speed running 1 (no output at stop) 41: Zero-speed running 2 (valid at stop) 42: Reserved 43: Reverse running 44: Process 1 45: Process 2 46: Process 3 47: Process 4 48: Process 5 49: Process 6 50: Process 7 53: Braking output			
F5-02	0xF502	DO2/RO2 hardware source	Same as F5–00	0	-	Real-time
F5-03	0xF503	DO2/RO2 output function	Same as F5–01	15	-	Real-time
F5-04	0xF504	DO3/RO3 hardware source	Same as F5–00	0	-	Real-time
F5-05	0xF505	DO3/RO3 output function	Same as F5–01	0	-	Real-time
F5-06	0xF506	DO4/RO4 hardware source	Same as F5–00	0	-	Real-time
F5-07	0xF507	DO4/RO4 output function	Same as F5–01	0	-	Real-time
F5-08	0xF508	DO5/RO5 hardware source	Same as F5–00	0	-	Real-time
F5-09	0xF509	DO5/RO5 output function	Same as F5–01	0	-	Real-time
F5-10	0xF50A	DO1/RO1 output delay	0.0s to 3600.0s	0.0	s	Real-time
F5-11	0xF50B	DO2/RO2 output delay	0.0s to 3600.0s	0.0	s	Real-time
F5-12	0xF50C	DO3/RO3 output delay	0.0s to 3600.0s	0.0	s	Real-time
F5-13	0xF50D	DO4/RO4 output delay	0.0s to 3600.0s	0.0	s	Real-time
F5-14	0xF50E	DO5/RO5 output delay	0.0s to 3600.0s	0.0	s	Real-time
F5-15	0xF50F	DO/RO valid state selection	Ones: 0: Positive logic 1: Negative logic Tens: 0: Positive logic 1: Negative logic Hundreds: 0: Positive logic 1: Negative logic Thousands: 0: Positive logic 1: Negative logic Ten thousands: 0: Positive logic 1: Negative logic	0	-	Real-time
F6-00	0xF600	Start mode	0: Direct start 1: Flying start (asynchronous motor)	0	-	Real-time

Code	Communication Address	Name	Value Range	Default	Unit	Change Mode
			2: Vector pre-excitation start (asynchronous motor)			
F6-01	0xF601	Flying start mode	0: From frequency at stop 1: From 50 Hz 2: From the maximum frequency 3: Flying start	0	-	At stop
F6-02	0xF602	Flying start speed	1 to 100	20	-	Real-time
F6-03	0xF603	Start frequency	0.00 Hz to 10.00 Hz	0.00	Hz	Real-time
F6-04	0xF604	Start frequency hold time	0.0s to 100.0s	0.0	s	At stop
F6-05	0xF605	DC braking/Pre-excitation current at startup	0% to 100%	0	%	At stop
F6-06	0xF606	DC braking/Pre-excitation time at startup	0.0s to 100.0s	0.0	s	At stop
F6-07	0xF607	Acceleration/Deceleration mode	0: Linear acceleration/ deceleration 1: S-curve acceleration/ deceleration 2: Four-segment S-curve acceleration/deceleration	0	-	At stop
F6-10	0xF60A	Stop mode	0: Decelerate to stop 1: Coast to stop	0	-	Real-time
F6-11	0xF60B	DC braking/Position lock start frequency at stop	0.00 Hz to 655.35 Hz	0.00	Hz	Real-time
F6-12	0xF60C	Waiting time of DC braking at stop	0.0s to 100.0s	0.0	s	Real-time
F6-13	0xF60D	DC braking current at stop	0% to 100%	50	%	Real-time
F6-14	0xF60E	DC braking time at stop	0.0s to 100.0s	0.5	s	Real-time
F6-15	0xF60F	Brake usage rate	0% to 100%	100	%	At stop
F6-16	0xF610	Closed loop current Kp of flying start	0–1000	500	-	Real-time
F6-17	0xF611	Closed loop current Ki of torque track	0–1000	800	-	Real-time
F6-18	0xF612	Current of flying start	30–200	100	-	Real-time
F6-19	0xF613	Gain coefficient of flying start	1.0–20.0	10.0	-	At stop
F6-20	0xF614	Filter cut-off frequency of flying start	0.5 Hz to 3.0 Hz	1.1	Hz	At stop
F6-21	0xF615	Demagnetization time	0.00s to 10.00s	1.00	s	Real-time
F6-22	0xF616	Start pre-torque setting	0.0% to 200.0%	0.0	%	Real-time
F6-23	0xF617	Operation command from power supply unit	0: Stop according to F6-10 1: Ignore stop command from power supply unit	0	-	At stop
F6-24	0xF618	Position lock Kp	0.0–100.0	10.0	-	Real-time

Code	Communication Address	Name	Value Range	De fault	Unit	Change Mode
F6-25	0xF619	Position lock end amplitude	0–16383	10	-	Real-time
F6-26	0xF61A	Time proportion of S-curve acceleration start segment	0.0% to 100.0%	30.0	%	At stop
F6-27	0xF61B	Time proportion of S-curve acceleration end segment	0.0% to 100.0%	30.0	%	At stop
F6-28	0xF61C	Time proportion of S-curve deceleration start segment	0.0% to 100.0%	30.0	%	At stop
F6-29	0xF61D	Time proportion of S-curve deceleration end segment	0.0% to 100.0%	30.0	%	At stop
F6-30	0xF61E	Trial current of speed track for synchronous motor	5.0% to 50.0%	20.0	%	At stop
F6-31	0xF61F	Minimum track frequency for synchronous motor speed track	0.0 Hz to 100.0 Hz	0.0	Hz	At stop
F6-32	0xF620	Angle compensation for synchronous motor speed track	0–360	0	-	At stop
F6-33	0xF621	Proportion coefficient of synchronous motor speed track	0.1–10.0	2.0	-	At stop
F6-34	0xF622	Integral coefficient of synchronous motor speed track	0.1–10.0	6.0	-	At stop
F6-35	0xF623	Reverse running inhibition for speed track	0–2	0	-	Real-time
F7-00	0xF700	Drive unit indicator test	0–2	0	-	Real-time
F7-01	0xF701	MF.K key function	0: MF.K key disabled 1: Switchover between operating panel control and remote control (terminal or communication) 2: Switchover between forward run and reverse run 3: Forward jog 4: Reverse jog	0	-	At stop
F7-02	0xF702	STOP/RES key function	0: Stop by the STOP/RES key enabled only in operating panel control mode 1: Stop by the STOP/RES key enabled in any operating mode	1	-	Real-time
F7-03	0xF703	Parameter 1 display on LED during operation	Bit 0: Running frequency (Hz) Bit 1: Frequency reference (Hz) Bit 2 Bus voltage (V) Bit 3: Output voltage (V) Bit 4: Output current (A)	31	-	Real-time

Code	Communication Address	Name	Value Range	Default	Unit	Change Mode
			Bit 5 Output power (kW) Bit 6: Output torque (%) Bit 7: DI status Bit 8: DO status Bit 9: AI1 voltage (V) Bit 10: AI2 voltage (V) Bit 11: AI3 voltage (V) Bit 12: Count value Bit 13: Length value Bit 14: Load speed display Bit 15: PID reference			
F7-04	0xF704	Parameter 2 display on LED during operation	Bit 0: PID feedback Bit 1: PLC stage Bit 2: Reserved Bit 3: Running frequency 2 (Hz) Bit 4: Remaining running time Bit 5: Reserved Bit 6: Reserved Bit 7: Reserved Bit 8: Linear speed Bit 9: Current power-on time (min.) Bit 10: Current running time (min.) Bit 11: Reserved Bit 12: Communication setting value Bit 13: Reserved Bit 14: Main frequency X display Bit 15: Auxiliary frequency Y display	0	-	Real-time
F7-05	0xF705	Parameter display on LED during stop	Bit 1: Frequency reference (Hz) Bit 1: Bus voltage (V) Bit 2: DI state Bit 3: DO state Bit 4: AI1 voltage (V) Bit 5: AI2 voltage (V) Bit 6: AI3 voltage (V) Bit 7: Count value Bit 8: Length value Bit 9: PLC stage Bit 10: Load speed display Bit 11: PID reference Bit 12: Reserved	51	-	Real-time
F7-06	0xF706	STO Software version	0.0–6553.5	0.0	-	Unchangeable
F7-07	0xF707	Drive unit heatsink temperature	-20°C to +120°C	0	°C	Unchangeable

Code	Communication Address	Name	Value Range	Default	Unit	Change Mode
F7-08	0xF708	Product No.	0–1000	0	-	Unchangeable
F7-09	0xF709	Accumulative running time	0 h to 65535 h	0	h	Unchangeable
F7-10	0xF70A	Performance software version	0.00	0.00	-	Unchangeable
F7-11	0xF70B	Function software version	0.00	0.00	-	Unchangeable
F7-12	0xF70C	Accumulative power-on time	0 h to 65535 h	0	h	Unchangeable
F7-13	0xF70D	Accumulative power output	0 kWh to 65535 kWh	0	kWh	Unchangeable
F7-14	0xF70E	Accumulative power consumption	0 kWh to 65535 kWh	0	kWh	Unchangeable
F7-15	0xF70F	Temporary performance software version	0.00	0.00	-	Unchangeable
F7-16	0xF710	Temporary function software version	0.00	0.00	-	Unchangeable
F8-00	0xF800	Jog frequency	0.00 Hz to 655.35 Hz	2.00	Hz	Real-time
F8-01	0xF801	Jog acceleration time	0.0s to 6500.0s	20.0	s	Real-time
F8-02	0xF802	Jog deceleration time	0.0s to 6500.0s	20.0	s	Real-time
F8-03	0xF803	Acceleration time 2	0.0s to 6500.0s	0.0	s	Real-time
F8-04	0xF804	Deceleration time 2	0.0s to 6500.0s	0.0	s	Real-time
F8-05	0xF805	Acceleration time 3	0.0s to 6500.0s	0.0	s	Real-time
F8-06	0xF806	Deceleration time 3	0.0s to 6500.0s	0.0	s	Real-time
F8-07	0xF807	Acceleration time 4	0.0s to 6500.0s	0.0	s	Real-time
F8-08	0xF808	Deceleration time 4	0.0s to 6500.0s	0.0	s	Real-time
F8-09	0xF809	Jump frequency 1	0.00 Hz to 655.35 Hz	0.00	Hz	Real-time
F8-10	0xF80A	Jump frequency 2	0.00 Hz to 655.35 Hz	0.00	Hz	Real-time
F8-11	0xF80B	Jump frequency amplitude	0.00 Hz to 5.00 Hz	0.00	Hz	Real-time
F8-12	0xF80C	Jump frequency state during acceleration/ deceleration	0: Invalid 1: Valid	0	-	Real-time
F8-13	0xF80D	Dead-zone time of forward/ reverse run	0.0s to 3000.0s	0.0	s	Real-time
F8-14	0xF80E	Reverse run	0: Allowed 1: Inhibited	0	-	Real-time
F8-15	0xF80F	Running mode when frequency is below the frequency lower limit	0: Run at frequency lower limit 1: Stop 2: Run at zero speed	0	-	Real-time
F8-17	0xF811	NO input mode of external fault	0: Active at any time 1: Active only in operation	0	-	At stop
F8-18	0xF812	NC input mode of external fault	0: Always active 1: Active only in running	0	-	At stop

Code	Communication Address	Name	Value Range	Default	Unit	Change Mode
F8-19	0xF813	Accumulative power-on time threshold	0 h to 65000 h	0	h	Real-time
F8-20	0xF814	Accumulative running time threshold	0 h to 65000 h	0	h	Real-time
F8-21	0xF815	Protection upon start	0: Disable 1: Enable	0	-	Real-time
F8-22	0xF816	Frequency detection value 1 (FDT1)	0.00 Hz to 655.35 Hz	50.00	Hz	Real-time
F8-23	0xF817	Frequency detection hysteresis value 1 (FDT1)	0.00 Hz to 655.35 Hz	2.50	Hz	Real-time
F8-24	0xF818	Frequency detection value 2 (FDT2)	0.00 Hz to 655.35 Hz	50.00	Hz	Real-time
F8-25	0xF819	Frequency detection hysteresis value 2 (FDT2)	0.00 Hz to 655.35 Hz	2.50	Hz	Real-time
F8-26	0xF81A	Range of detection frequency	0.00 Hz to 655.35 Hz	2.50	Hz	Real-time
F8-27	0xF81B	Detection frequency 1	0.00 Hz to 655.35 Hz	50.00	Hz	Real-time
F8-28	0xF81C	Range of detection frequency 1	0.00 Hz to 655.35 Hz	2.50	Hz	Real-time
F8-29	0xF81D	Detection mode when running frequency reaches detection frequency 1	0: Detection is performed at any time. 1: Detection is not performed during acceleration/ deceleration.	0	-	At stop
F8-30	0xF81E	Detection value 2 for frequency reach	0.00 Hz to 655.35 Hz	50.00	Hz	Real-time
F8-31	0xF81F	Range of detection frequency 2	0.00 Hz to 655.35 Hz	2.50	Hz	Real-time
F8-32	0xF820	Detection mode when running frequency reaches detection frequency 2	0: Detection is performed at any time. 1: Detection is not performed during acceleration/ deceleration.	0	-	At stop
F8-35	0xF823	Frequency of switchover between acceleration time 1 and acceleration time 2	0.00 Hz to 655.35 Hz	0.00	Hz	Real-time
F8-36	0xF824	Frequency of switchover between deceleration time 1 and deceleration time 2	0.00 Hz to 655.35 Hz	0.00	Hz	Real-time
F8-37	0xF825	Jog with priority	0: Invalid 1: Valid	0	-	At stop
F8-38	0xF826	Zero current detection level	0.0% to 300.0%	5.0	%	Real-time
F8-39	0xF827	Zero current detection delay	0.01s to 600.00s	0.10	s	Real-time

Code	Communication Address	Name	Value Range	Default	Unit	Change Mode
F8-40	0xF828	Output overcurrent threshold	0.0% to 300.0%	200.0	%	Real-time
F8-41	0xF829	Software overcurrent detection delay	0.00s to 600.00s	0.00	s	Real-time
F8-42	0xF82A	Detection level of current 1	0.0% to 300.0%	100.0	%	Real-time
F8-43	0xF82B	Detection width of current 1	0.0% to 300.0%	0.0	%	Real-time
F8-44	0xF82C	Detection level of current 2	0.0% to 300.0%	100.0	%	Real-time
F8-45	0xF82D	Detection width of current 2	0.0% to 300.0%	0.0	%	Real-time
F8-46	0xF82E	Timing function	0: Invalid 1: Valid	0	-	At stop
F8-47	0xF82F	Scheduled running time setting	0: F8-48 1: AI1 2: AI2	0	-	At stop
F8-48	0xF830	Scheduled running time	0.0 min to 6500.0 min	0.0	min	At stop
F8-49	0xF831	Lower limit of AI1 input voltage	0.00 V to 655.35 V	3.10	V	Real-time
F8-50	0xF832	Upper limit of AI1 input voltage	0.00 V to 11.00 V	6.80	V	Real-time
F8-51	0xF833	Module temperature threshold	0°C to 100°C	75	°C	Real-time
F8-52	0xF834	Fan run control	0: The fan runs forward during AC drive operation. 1: The fan runs forward at any time. 2: The fan runs forward or reversely at any time. 3: The fan runs forward or reversely during AC drive operation.	0	-	Real-time
F8-54	0xF836	Wakeup frequency	0.00 Hz to 655.35 Hz	0.00	Hz	Real-time
F8-55	0xF837	Wakeup delay	0.0s to 6500.0s	0.0	s	Real-time
F8-56	0xF838	Hibernation frequency	0.00 Hz to 655.35 Hz	0.00	Hz	Real-time
F8-57	0xF839	Hibernation delay	0.0s to 6500.0s	0.0	s	Real-time
F8-58	0xF83A	Current running time	0.0 min to 6500.0 min	0.0	min	Real-time
F8-59	0xF83B	Communication address 2000H/2001H switchover	0: General protocol 1: Specialized protocol	0	-	At stop
F8-60	0xF83C	Deceleration time for emergency stop	0.0s to 6500.0s	0.0	s	Real-time
F8-61	0xF83D	Jog enabled by LED operating panel	0	0	-	Unchangeable

Code	Communication Address	Name	Value Range	Default	Unit	Change Mode
F8-62	0xF83E	Load speed display coefficient	0.0000–6.5000	1.0000	-	Real-time
F8-63	0xF83F	Number of decimal places for load speed display	0: 0 decimal place 1: 1 decimal place 2: 2 decimal places 3: 3 decimal places	1	-	Real-time
F8-64	0xF840	7310H address data unit	0: Frequency (Hz) 1: Speed (RPM)	0	-	At stop
F9-00	0xF900	AC drive overload protection	0–1	0	-	Real-time
F9-01	0xF901	Motor overload protection gain	0.20 to 10.00	1.00	-	Real-time
F9-02	0xF902	Motor overload warning coefficient	50% to 100%	80	%	Real-time
F9-06	0xF906	Output phase loss detection before start	0: Invalid 1: Valid	0	%	Real-time
F9-07	0xF907	Detection of short circuit to ground before power-on	0: Disable 1: Enable	1	-	At stop
F9-09	0xF909	Number of automatic reset times upon fault	0–20	0	-	Real-time
F9-10	0xF90A	DO action during automatic fault reset	0: Disable 1: Enable	0	-	Real-time
F9-11	0xF90B	Interval for automatic fault reset	0.1s to 100.0s	1.0	s	Real-time
F9-12	0xF90C	Restart interval upon fault reset	0.0s to 100.0s	1.0	s	Real-time
F9-13	0xF90D	Reset mode upon STO fault	0: Manual reset 1: Automatic reset	1	-	At stop
F9-14	0xF90E	1st fault type	0–99	0	-	Unchangeable
F9-15	0xF90F	2nd fault type	0–99	0	-	Unchangeable
F9-16	0xF910	3rd (latest) fault type	0–99	0	-	Unchangeable
F9-17	0xF911	Frequency upon the 3rd (latest) fault	0	0	-	Unchangeable
F9-18	0xF912	Current upon the 3rd (latest) fault	0	0	-	Unchangeable
F9-19	0xF913	Bus voltage upon the 3rd (latest) fault	0	0	-	Unchangeable
F9-20	0xF914	Input terminal state upon the 3rd (latest) fault	0	0	-	Unchangeable
F9-21	0xF915	Output terminal state upon the 3rd (latest) fault	0	0	-	Unchangeable

Code	Communication Address	Name	Value Range	Default	Unit	Change Mode
F9-22	0xF916	AC drive state upon the 3rd (latest) fault	0	0	-	Unchangeable
F9-23	0xF917	Power-on time upon the 3rd (latest) fault	0	0	-	Unchangeable
F9-24	0xF918	Running time upon the 3rd (latest) fault	0	0	-	Unchangeable
F9-25	0xF919	IGBT temperature upon the 3rd fault (latest)	0	0	-	Unchangeable
F9-26	0xF91A	3rd (latest) fault subcode	0	0	-	Unchangeable
F9-27	0xF91B	Frequency upon the 2nd fault	0	0	-	Unchangeable
F9-28	0xF91C	Current upon the 2nd fault	0	0	-	Unchangeable
F9-29	0xF91D	Bus voltage upon the 2nd fault	0	0	-	Unchangeable
F9-30	0xF91E	Input terminal state upon the 2nd fault	0	0	-	Unchangeable
F9-31	0xF91F	Output terminal state upon the 2nd fault	0	0	-	Unchangeable
F9-32	0xF920	AC drive state upon the 2nd fault	0	0	-	Unchangeable
F9-33	0xF921	Power-on time upon the 2nd fault	0	0	-	Unchangeable
F9-34	0xF922	Running time upon the 2nd fault	0	0	-	Unchangeable
F9-35	0xF923	IGBT temperature upon the 2nd fault	0	0	-	Unchangeable
F9-36	0xF924	2nd fault subcode	0	0	-	Unchangeable
F9-37	0xF925	Frequency upon the 1st fault	0	0	-	Unchangeable
F9-38	0xF926	Current upon the 1st fault	0	0	-	Unchangeable
F9-39	0xF927	Bus voltage upon the 1st fault	0	0	-	Unchangeable
F9-40	0xF928	Input terminal state upon the 1st fault	0	0	-	Unchangeable
F9-41	0xF929	Output terminal state upon the 1st fault	0 to 0	0	-	Unchangeable
F9-42	0xF92A	AC drive state upon the 1st fault	0 to 0	0	-	Unchangeable
F9-43	0xF92B	Power-on time upon the 1st fault	0 to 0	0	-	Unchangeable
F9-44	0xF92C	Running time upon the 1st fault	0	0	-	Unchangeable

Code	Communication Address	Name	Value Range	Default	Unit	Change Mode
F9-45	0xF92D	IGBT temperature upon the 1st fault	0	0	-	Unchangeable
F9-46	0xF92E	1st fault subcode	0	0	-	Unchangeable
F9-47	0xF92F	Fault protection action selection 0	0–55555	500	-	At stop
F9-48	0xF930	Fault protection action selection 1	Ones: Value of E11 0: Coast to stop 1: Decelerate to stop 2: Special action 4: Warning 5: Disable Tens: Reserved 0: Coast to stop 1: Decelerate to stop 4: Warning 5: Disable Hundreds: Value of E13 0: Coast to stop 1: Decelerate to stop 2: Special action 4: Warning 5: Disable Thousands: Value of E14 0: Coast to stop Ten thousands: Value of E15 0: Coast to stop 1: Decelerate to stop 4: Warning 5: Disable	10050	-	At stop
F9-49	0xF931	Fault protection action selection 2	Ones: Value of E16 0: Coast to stop 1: Decelerate to stop 4: Warning 5: Disable Tens: Reserved 5: Disable Hundreds: Reserved 0: Coast to stop Thousands: Value of E19 0: Coast to stop 4: Warning 5: Disable Ten thousands: Reserved 5: Disable	50050	-	At stop
F9-50	0xF932	Fault protection action selection 3	Ones: Value of E21 0: Coast to stop Tens: Value of E22	25000	-	At stop

Code	Communication Address	Name	Value Range	De fault	Unit	Change Mode
			0: Coast to stop Hundreds: Value of E23 0: Coast to stop 5: Disable Thousands: Reserved 5: Disable Ten thousands: Value of E25 2: Decelerate to stop 5: Disable			
F9-51	0xF933	Fault protection action selection 4	Ones: Value of E26 0: Coast to stop 1: Decelerate to stop 4: Warning 5: Disable Tens: Value of E27 0: Coast to stop 1: Decelerate to stop 4: Warning 5: Disable Hundreds: Value of E28 0: Coast to stop 1: Decelerate to stop 4: Warning 5: Disable Thousands: Value of E29 0: Coast to stop 1: Decelerate to stop 4: Warning 5: Disable Ten thousands: Value of E30 0: Coast to stop 1: Decelerate to stop 4: Warning 5: Disable	5111 1	-	At stop
F9-52	0xF934	Fault protection action selection 5	Ones: Value of E31 0: Coast to stop 1: Decelerate to stop 4: Warning 5: Disable Tens: Reserved 5: Disable Hundreds: Reserved 5: Disable Thousands: Value of E42 0: Coast to stop 1: Decelerate to stop 4: Warning 5: Disable Ten thousands: Value of E43	551	-	At stop

Code	Communication Address	Name	Value Range	De fault	Unit	Change Mode
			0: Coast to stop 1: Decelerate to stop 4: Warning 5: Disable			
F9-53	0xF935	Fault protection action selection 6	Ones: Value of E45 0: Coast to stop 1: Decelerate to stop 4: Warning 5: Disable Tens: Reserved 5: Disable Hundreds: Reserved 5: Disable Thousands: Reserved 5: Disable Ten thousands: Value of E80 0: Coast to stop 1: Decelerate to stop 5: Disable	5500	-	At stop
F9-54	0xF936	Frequency for continuing to run upon fault	0: Current running frequency 1: Frequency reference 2: Frequency upper limit 3: Frequency lower limit 4: Backup frequency upon abnormality	1	-	Real-time
F9-55	0xF937	Backup frequency reference upon abnormality	0.0% to 100.0%	100.0	%	Real-time
F9-57	0xF939	Motor overheat protection threshold 1	0°C to 200°C	110	°C	Real-time
F9-58	0xF93A	Motor overheat warning threshold 1	0°C to 200°C	90	°C	Real-time
F9-59	0xF93B	Motor overheat protection threshold 2	0°C to 200°C	110	°C	Real-time
F9-60	0xF93C	Motor overheat warning threshold 2	0°C to 200°C	90	°C	Real-time
F9-61	0xF93D	Motor overheat protection threshold 3	0°C to 200°C	110	°C	Real-time
F9-62	0xF93E	Motor overheat warning threshold 3	0°C to 200°C	90	°C	Real-time
F9-63	0xF93F	Power dip ride-through function	0: Disabled 1: Decelerate 2: Decelerate to stop	0	-	At stop
F9-64	0xF940	Threshold for recovering from power dip ride-through	8.0% to 10.0%	8.5	%	Real-time

Code	Communication Address	Name	Value Range	Default	Unit	Change Mode
F9-65	0xF941	Time to determine voltage recovery from instantaneous power failure	0.0s to 100.0s	0.5	s	Real-time
F9-66	0xF942	Voltage to determine instantaneous power failure	60% to 100%	80	%	Real-time
F9-67	0xF943	Alarm threshold of continuous frame loss times for I/O module	1–1000	60	-	At stop
F9-68	0xF944	Load loss detection level	0.0% to 100.0%	10.0	%	Real-time
F9-69	0xF945	Load loss detection time	0.1s to 60.0s	1.0	s	Real-time
F9-71	0xF947	Overspeed detection level	0.0% to 50.0%	5.0	%	Real-time
F9-72	0xF948	Overspeed detection time	0.0–60.0	1.0	-	Real-time
F9-73	0xF949	Detection level of excessive speed deviation	0.0% to 50.0%	20.0	%	Real-time
F9-74	0xF94A	Detection time of excessive speed deviation	0.0s to 60.0s	5.0	s	Real-time
F9-75	0xF94B	Power dip ride-through gain	0–100	40	-	Real-time
F9-76	0xF94C	Power dip ride-through integral	0–100	30	-	Real-time
F9-77	0xF94D	Deceleration time of power dip ride-through	0.0s to 300.0s	20.0	s	Real-time
FA-00	0xFA00	PID reference source	0: PID digital reference (FA-01) 1: AI1 2: AI2 3: AI3 4: Reserved 5 Communication 6: Multi-reference	0	-	Real-time
FA-01	0xFA01	PID digital reference	0.0% to 100.0%	50.0	%	Real-time
FA-02	0xFA02	PID feedback source	0: AI1 1: AI2 2: AI3 3: AI1 – AI2 4: Reserved 5: Communication 6: AI1 + AI2 7: Max. (|AI1|, |AI2|) 8: Min. (|AI1|, |AI2|)	0	-	Real-time
FA-03	0xFA03	PID action direction	0: Forward 1: Reverse	0	-	Real-time
FA-04	0xFA04	PID reference and feedback range	0–65535	1000	-	Real-time
FA-05	0xFA05	Proportional gain Kp1	0.0–1000.0	20.0	-	Real-time

Code	Communication Address	Name	Value Range	Default	Unit	Change Mode
FA-06	0xFA06	Integral time Ti1	0.01s to 100.00s	2.00	s	Real-time
FA-07	0xFA07	Derivative time Td1	0.000s to 10.000s	0.000	s	Real-time
FA-08	0xFA08	PID cut-off frequency in reverse direction	0.00 Hz to 655.35 Hz	2.00	Hz	Real-time
FA-09	0xFA09	PID deviation limit	0.0% to 100.0%	0.0	%	Real-time
FA-10	0xFA0A	PID differential limit	0.00% to 100.00%	0.10	%	Real-time
FA-11	0xFA0B	PID reference change time	0.00s to 650.00s	0.00	s	Real-time
FA-12	0xFA0C	PID feedback filter time	0.00s to 60.00s	0.00	s	Real-time
FA-13	0xFA0D	PID error gain	0.0% to 100.0%	100.0	%	Real-time
FA-15	0xFA0F	Proportional gain Kp2	0.0–1000.0	20.0	-	Real-time
FA-16	0xFA10	Integral time Ti2	0.01s to 100.00s	2.00	s	Real-time
FA-17	0xFA11	Derivative time Td2	0.000s to 10.000s	0.000	s	Real-time
FA-18	0xFA12	PID parameter switchover condition	0: No switchover 1: Switchover by DI 2: Automatic switchover based on deviation 3: Switchover based on running frequency 6: Automatic adjustment based on roll diameter 7: Automatic adjustment based on maximum roll diameter percentage	0	-	Real-time
FA-19	0xFA13	PID parameter switchover deviation 1	0.0% to 6553.5%	20.0	%	Real-time
FA-20	0xFA14	PID parameter switchover deviation 2	0.0% to 100.0%	80.0	%	Real-time
FA-21	0xFA15	PID initial value	0.0% to 100.0%	0.0	%	Real-time
FA-22	0xFA16	PID initial value holding time	0.00s to 650.00s	0.00	s	Real-time
FA-23	0xFA17	Maximum positive deviation between two PID outputs	0.00% to 100.00%	1.00	%	Real-time
FA-24	0xFA18	Maximum negative deviation between two PID outputs	0.00% to 100.00%	1.00	%	Real-time
FA-25	0xFA19	PID integral	0: Invalid 1: Valid	0	-	Real-time
FA-26	0xFA1A	Detection level of PID feedback loss	0.0% to 100.0%	0.0	%	Real-time
FA-27	0xFA1B	Detection time of PID feedback loss	0.0s to 20.0s	0.0	s	Real-time
FB-00	0xFB00	Wobble setting mode	0: Relative to central frequency	0	-	Real-time

Code	Communication Address	Name	Value Range	De fault	Unit	Change Mode
			1: Relative to maximum frequency			
FB-01	0xFB01	Wobble amplitude	0.0% to 100.0%	0.0	%	Real-time
FB-02	0xFB02	Jump frequency amplitude	0.0% to 50.0%	0.0	%	Real-time
FB-03	0xFB03	Wobble cycle	0.1s to 3000.0s	10.0	s	Real-time
FB-04	0xFB04	Triangular wave rising time of wobble	0.1% to 100.0%	50.0	%	Real-time
FB-05	0xFB05	Reference length	0 m to 65535 m	1000	m	Real-time
FB-06	0xFB06	Actual length	0 m to 65535 m	0	m	Real-time
FB-07	0xFB07	Number of pulses per meter	0.1–6553.5	100.0	-	Real-time
FB-08	0xFB08	Reference count value	1–65535	1000	-	Real-time
FB-09	0xFB09	Designated count value	1–65535	1000	-	Real-time
FC-00	0xFC00	Multi-reference 0	-100.0% to +100.0%	0.0	%	Real-time
FC-01	0xFC01	Multi-reference 1	-100.0% to +100.0%	0.0	%	Real-time
FC-02	0xFC02	Multi-reference 2	-100.0% to +100.0%	0.0	%	Real-time
FC-03	0xFC03	Multi-reference 3	-100.0% to +100.0%	0.0	%	Real-time
FC-04	0xFC04	Multi-reference 4	-100.0% to +100.0%	0.0	%	Real-time
FC-05	0xFC05	Multi-reference 5	-100.0% to +100.0%	0.0	%	Real-time
FC-06	0xFC06	Multi-reference 6	-100.0% to +100.0%	0.0	%	Real-time
FC-07	0xFC07	Multi-reference 7	-100.0% to +100.0%	0.0	%	Real-time
FC-08	0xFC08	Multi-reference 8	-100.0% to +100.0%	0.0	%	Real-time
FC-09	0xFC09	Multi-reference 9	-100.0% to +100.0%	0.0	%	Real-time
FC-10	0xFC0A	Multi-reference 10	-100.0% to +100.0%	0.0	%	Real-time
FC-11	0xFC0B	Multi-reference 11	-100.0% to +100.0%	0.0	%	Real-time
FC-12	0xFC0C	Multi-reference 12	-100.0% to +100.0%	0.0	%	Real-time
FC-13	0xFC0D	Multi-reference 13	-100.0% to +100.0%	0.0	%	Real-time
FC-14	0xFC0E	Multi-reference 14	-100.0% to +100.0%	0.0	%	Real-time
FC-15	0xFC0F	Multi-reference 15	-100.0% to +100.0%	0.0	%	Real-time
FC-16	0xFC10	Simple PLC running mode	0: Stop after running for one cycle 1: Keep final values after running for one cycle 2: Repeat after running for one cycle	0	-	Real-time
FC-17	0xFC11	Simple PLC retention selection upon power failure	Ones: 0: Non-retentive upon power failure 1: Retentive upon power failure Tens: 0: Non-retentive upon stop 1: Retentive upon stop	0	-	Real-time
FC-18	0xFC12	Running time of speed reference 0 set by simple PLC	0.0s (h) to 6553.5s (h)	0.0	s (h)	Real-time

Code	Communication Address	Name	Value Range	De fault	Unit	Change Mode
FC-19	0xFC13	Acceleration/deceleration time of speed reference 0 set by simple PLC	0–3	0	-	Real-time
FC-20	0xFC14	Running time of speed reference 1 set by simple PLC	0.0s (h) to 6553.5s (h)	0.0	s (h)	Real-time
FC-21	0xFC15	Acceleration/deceleration time of speed reference 1 set by simple PLC	0–3	0	-	Real-time
FC-22	0xFC16	Running time of speed reference 2 set by simple PLC	0.0 s(h) to 6553.5 s(h)	0.0	s (h)	Real-time
FC-23	0xFC17	Acceleration/deceleration time of speed reference 2 set by simple PLC	0–3	0	-	Real-time
FC-24	0xFC18	Running time of speed reference 3 set by simple PLC	0.0s (h) to 6553.5s (h)	0.0	s (h)	Real-time
FC-25	0xFC19	Acceleration/deceleration time of speed reference 3 set by simple PLC	0–3	0	-	Real-time
FC-26	0xFC1A	Running time of speed reference 4 set by simple PLC	0.0s (h) to 6553.5s (h)	0.0	s (h)	Real-time
FC-27	0xFC1B	Acceleration/deceleration time of speed reference 4 set by simple PLC	0–3	0	-	Real-time
FC-28	0xFC1C	Running time of speed reference 5 set by simple PLC	0.0s (h) to 6553.5s (h)	0.0	s (h)	Real-time
FC-29	0xFC1D	Acceleration/deceleration time of speed reference 5 set by simple PLC	0–3	0	-	Real-time
FC-30	0xFC1E	Running time of speed reference 6 set by simple PLC	0.0s(h) to 6553.5s(h)	0.0	s (h)	Real-time
FC-31	0xFC1F	Acceleration/deceleration time of speed reference 6 set by simple PLC	0–3	0	-	Real-time
FC-32	0xFC20	Running time of speed reference 7 set by simple PLC	0.0s (h) to 6553.5s (h)	0.0	s (h)	Real-time
FC-33	0xFC21	Acceleration/deceleration time of speed reference 7 set by simple PLC	0–3	0	-	Real-time

Code	Communication Address	Name	Value Range	De fault	Unit	Change Mode
FC-34	0xFC22	Running time of speed reference 8 set by simple PLC	0.0s(h) to 6553.5s(h)	0.0	s (h)	Real-time
FC-35	0xFC23	Acceleration/deceleration time of speed reference 8 set by simple PLC	0–3	0	-	Real-time
FC-36	0xFC24	Running time of speed reference 9 set by simple PLC	0.0s (h) to 6553.5s (h)	0.0	s (h)	Real-time
FC-37	0xFC25	Acceleration/deceleration time of speed reference 9 set by simple PLC	0–3	0	-	Real-time
FC-38	0xFC26	Running time of speed reference 10 set by simple PLC	0.0s (h) to 6553.5s (h)	0.0	s (h)	Real-time
FC-39	0xFC27	Acceleration/deceleration time of speed reference 10 set by simple PLC	0–3	0	-	Real-time
FC-40	0xFC28	Running time of speed reference 11 set by simple PLC	0.0s (h) to 6553.5s (h)	0.0	s (h)	Real-time
FC-41	0xFC29	Acceleration/deceleration time of speed reference 11 set by simple PLC	0–3	0	-	Real-time
FC-42	0xFC2A	Running time of speed reference 12 set by simple PLC	0.0s (h) to 6553.5s (h)	0.0	s (h)	Real-time
FC-43	0xFC2B	Acceleration/deceleration time of speed reference 12 set by simple PLC	0–3	0	-	Real-time
FC-44	0xFC2C	Running time of speed reference 13 set by simple PLC	0.0s (h) to 6553.5s (h)	0.0	s (h)	Real-time
FC-45	0xFC2D	Acceleration/deceleration time of speed reference 13 set by simple PLC	0–3	0	-	Real-time
FC-46	0xFC2E	Running time of speed reference 14 set by simple PLC	0.0s (h) to 6553.5s (h)	0.0	s (h)	Real-time
FC-47	0xFC2F	Acceleration/deceleration time of speed reference 14 set by simple PLC	0–3	0	-	Real-time
FC-48	0xFC30	Running time of speed reference 15 set by simple PLC	0.0s(h) to 6553.5s(h)	0.0	s (h)	Real-time

Code	Communication Address	Name	Value Range	Default	Unit	Change Mode
FC-49	0xFC31	Acceleration/deceleration time of speed reference 15 set by simple PLC	0–3	0	-	Real-time
FC-50	0xFC32	PLC running time unit	0: second (s) 1: hour (h)	0	-	Real-time
FC-51	0xFC33	Multi-reference 0 source	0: FC-00 (Multi-reference 0) 1: AI1 2: AI2 3: AI3 4: Reserved 5: PID 6: F0-08 (Preset frequency, which can be changed by pressing UP or DOWN key)	0	-	Real-time
FD-02	0xFD02	Local address	0–247	1	-	Unchangeable
FD-03	0xFD03	Modbus response delay	0 ms to 20 ms	2	ms	Real-time
FD-04	0xFD04	Modbus communication timeout	0.0s to 60.0s	0.0	s	Unchangeable
FD-06	0xFD06	Communication fault reset	0–1	1	-	At stop
FD-08	0xFD08	Last allocated station number	0 to 65535	0	-	Unchangeable
FD-09	0xFD09	Communication status	Ones: CANopen 0: Stop 1: Initialization 2: Pre-running 8: Running Tens: CANlink 0: Stop 1: Initialization 2: Pre-running 8: Running Hundreds position: Reserved 0: Stop 1: Initialization 2-8: Running	0	-	Unchangeable
FD-10	0xFD0A	CANopen/CANlink switchover	1: CANopen 2: CANlink	1	-	Unchangeable
FD-11	0xFD0B	CiA 402	0: Disable 1: Enable	0	-	At stop
FD-13	0xFD0D	CAN station number	1–127	1	-	At stop
FD-14	0xFD0E	Number of CAN frames received per unit of time	0–65535	1	-	Unchangeable
FD-19	0xFD13	CAN communication disconnection coefficient	1–15	5	-	At stop

Code	Communication Address	Name	Value Range	De fault	Unit	Change Mode
FD-92	0xFD5C	Communication version	0.00–655.35	0.00	-	Unchange able
FE-00	0xFE00	User-defined parameter 0	0	0	-	Real-time
FE-01	0xFE01	User-defined parameter 1	0	0	-	Real-time
FE-02	0xFE02	User-defined parameter 2	0	0	-	Real-time
FE-03	0xFE03	User-defined parameter 3	0	0	-	Real-time
FE-04	0xFE04	User-defined parameter 4	0	0	-	Real-time
FE-05	0xFE05	User-defined parameter 5	0	0	-	Real-time
FE-06	0xFE06	User-defined parameter 6	0	0	-	Real-time
FE-07	0xFE07	User-defined parameter 7	0	0	-	Real-time
FE-08	0xFE08	User-defined parameter 8	0	0	-	Real-time
FE-09	0xFE09	User-defined parameter 9	0	0	-	Real-time
FE-10	0xFE0A	User-defined parameter 10	0	0	-	Real-time
FE-11	0xFE0B	User-defined parameter 11	0	0	-	Real-time
FE-12	0xFE0C	User-defined parameter 12	0	0	-	Real-time
FE-13	0xFE0D	User-defined parameter 13	0	0	-	Real-time
FE-14	0xFE0E	User-defined parameter 14	0	0	-	Real-time
FE-15	0xFE0F	User-defined parameter 15	0	0	-	Real-time
FE-16	0xFE10	User-defined parameter 16	0	0	-	Real-time
FE-17	0xFE11	User-defined parameter 17	0	0	-	Real-time
FE-18	0xFE12	User-defined parameter 18	0	0	-	Real-time
FE-19	0xFE13	User-defined parameter 19	0	0	-	Real-time
FE-20	0xFE14	User-defined parameter 20	0	0	-	Real-time
FE-21	0xFE15	User-defined parameter 21	0	0	-	Real-time
FE-22	0xFE16	User-defined parameter 22	0	0	-	Real-time
FE-23	0xFE17	User-defined parameter 23	0	0	-	Real-time
FE-24	0xFE18	User-defined parameter 24	0	0	-	Real-time
FE-25	0xFE19	User-defined parameter 25	0	0	-	Real-time
FE-26	0xFE1A	User-defined parameter 26	0	0	-	Real-time
FE-27	0xFE1B	User-defined parameter 27	0	0	-	Real-time
FE-28	0xFE1C	User-defined parameter 28	0	0	-	Real-time
FE-29	0xFE1D	User-defined parameter 29	0	0	-	Real-time
FE-30	0xFE1E	User-defined parameter 30	0	0	-	Real-time
FE-31	0xFE1F	User-defined parameter 31	0	0	-	Real-time
FF-00	0xFF00	Manufacturer password	0–65535	0	-	Real-time
FF-01	0xFF01	AC drive model	5–14	11	-	At stop
FF-03	0xFF03	AC drive power	0.0 kW to 6553.5 kW	3.7	kW	Unchange able
FF-04	0xFF04	Temperature curve	1–2	2	-	At stop

Code	Communication Address	Name	Value Range	Default	Unit	Change Mode
FF-05	0xFF05	Current sampling gain error between U and V phases	90.00% to 110.00%	100.00	%	At stop
FF-06	0xFF06	Current sampling gain error between U and W phases	90.0% to 110.0%	100.0	%	At stop
FF-07	0xFF07	Transistor voltage drop	0.00–655.35	0.00	-	Unchangeable
FF-08	0xFF08	Voltage correction coefficient	85.0% to 150.0%	100.0	%	Real-time
FF-09	0xFF09	Current correction coefficient	85.0% to 115.0%	100.0	%	Real-time
FF-12	0xFF0C	Setting of any memory data address	0–1	0	-	Real-time
FP-00	0x1F00	User password	0 to 65535	0	-	Unchangeable
FP-01	0x1F01	Parameter initialization	0: No operation 1: Restore to factory settings 1 2: Clear records 4: Back up current user parameters 501: Restore user backup parameters	1	-	Real-time
FP-02	0x1F02	Parameter display settings	Ones: 0: Hidden 1: Displayed Tens: 0: Hidden 1: Displayed Hundreds: 0: Hidden 1: Displayed Thousands: 0: Hidden 1: Displayed	111	-	Real-time
FP-03	0x1F03	Individualized parameter display settings	Ones: 0: Hidden 1: Displayed Tens: 0: Hidden 1: Displayed	0	-	Real-time
FP-04	0x1F04	Parameter modification	0: Enable 1: Disable	0	-	Real-time
A0-00	0xA000	Speed/Torque control	0: Speed control 1: Torque control	0	-	At stop
A0-01	0xA001	Torque setting source	0: Torque digital setting (A0-03) 1: AI1 2: AI2 3: AI3	0	-	At stop

Code	Communication Address	Name	Value Range	Default	Unit	Change Mode
			4: Reserved 5: Communication setting (1000H) 6: Min. (AI1, AI2) 7: Max. (AI1, AI2)			
A0-03	0xA003	Torque digital setting	-200.0% to +200.0%	1.0	%	Real-time
A0-04	0xA004	Torque filter time	0.000s to 5.000s	0.000	s	Real-time
A0-05	0xA005	Speed limit digital setting	-120.0% to +120.0%	0.0	%	Real-time
A0-07	0xA007	Torque acceleration time	0.00s to 650.00s	1.00	s	Real-time
A0-08	0xA008	Torque deceleration time	0.00s to 650.00s	1.00	s	Real-time
A0-09	0xA009	Speed limit reference source	0: A0-05 1: Frequency source	0	-	Real-time
A0-10	0xA00A	Speed limit offset	0.00–655.35	5.00	-	Real-time
A0-11	0xA00B	Effective mode of speed limit offset	0: Bidirectional offset 1: Unidirectional offset	0	-	At stop
A0-12	0xA00C	Frequency acceleration time	0.0s to 6500.0s	1.0	s	Real-time
A0-13	0xA00D	Frequency deceleration time	0.0s to 6500.0s	1.0	s	Real-time
A0-14	0xA00E	Torque mode switchover	0: No switchover 1: Switch to speed control at stop. 2: Set the target torque to 0 at stop.	1	-	At stop
A1-00	0xA100	VDI1 function	0: No function 1: Forward run (FWD) 2: Reverse run (REV) 3: Three-wire motion control 4: Forward jog (FJOG) 5: Reverse jog (RJOG) 6: Same as the UP key 7: Same as the DOWN key 8: Clear information set by UP/DOWN keys on the operating panel or by terminals functioning as the UP/DOWN keys 9: Fault reset (RESET) 10: External fault NO input 11: External fault NC input 12: User-defined fault 1 13: User-defined fault 2 14: Multi-reference terminal 1 15: Multi-reference terminal 2 16: Multi-reference terminal 3 17: Multi-reference terminal 4	0	-	At stop

Code	Communication Address	Name	Value Range	De fault	Unit	Change Mode
			18: Acceleration/Deceleration terminal 1 19: Acceleration/Deceleration terminal 2 20: Acceleration/Deceleration prohibition 21: Command source switchover terminal 1 22: Command source switchover terminal 2 23: Frequency reference switchover 24:Switchover between main frequency reference X and preset frequency 25: Switchover between auxiliary frequency reference Y and preset frequency 26: Frequency modification enable 27: Counter input 28: Counter reset 29: Length input 30: Length reset			
A1-00	0xA100	VDI1 function	31: PID pause 32: PID integral pause 33: PID parameter switchover 34: PID action direction reverse 35: Torque control prohibition 36: Speed control/Torque control switchover 38: Speed tracking enable 39: Immediate DC braking 40: Deceleration DC braking 41: External stop terminal 1 42: External stop terminal 2 43: Running pause 44: Coast to stop 45: Emergency stop 46: Motor selection terminal 47: Current running time clear 48: Two-wire/Three-wire motion control switchover 49: PLC state reset 50: Wobble pause 94: Braking feedback 1 95: Braking feedback 2	0	-	At stop
A1-01	0xA101	VDI2 function	Same as A1–00	0	-	At stop

Code	Communication Address	Name	Value Range	Default	Unit	Change Mode
A1-02	0xA102	VDI3 function	Same as A1–00	0	-	At stop
A1-03	0xA103	VDI4 function	Same as A1–00	0	-	At stop
A1-04	0xA104	VDI5 function	Same as A1–00	0	-	At stop
A1-05	0xA105	VDI state setting mode	Ones: 0: Set by A1-06 1: DO state 2: DI state Tens: 0: Set by A1-06 1: DO state 2: DI state Hundreds: 0: Set by A1-06 1: DO state 2: DI state Thousands: 0: Set by A1-06 1: DO state 2: DI state Ten thousands: 0: Set by A1-06 1: DO state 2: DI state	0	-	At stop
A1-06	0xA106	VDI state	Ones: 0: Invalid 1: Valid Tens: 0: Invalid 1: Valid Hundreds: 0: Invalid 1: Valid Thousands: 0: Invalid 1: Valid Ten thousands: 0: Invalid 1: Valid	0	-	Real-time
A1-07	0xA107	AI1 function (used as DI)	Same as A1–00	0	-	At stop
A1-08	0xA108	AI2 function (used as DI)	Same as A1–00	0	-	At stop
A1-09	0xA109	AI3 function (used as DI)	Same as A1–00	0	-	At stop
A1-10	0xA10A	State of AI used as DI	Ones: 0: Active high 1: Active low Tens: 0: Active high 1: Active low	0	-	At stop

Code	Communication Address	Name	Value Range	Default	Unit	Change Mode
			Hundreds: 0: Active high 1: Active low			
A5-00	0xA500	Frequency upper limit for DPWM switchover	0.00 Hz to 50.00 Hz	12.00	Hz	Real-time
A5-01	0xA501	PWM modulation mode	0: Asynchronous modulation 1: Synchronous modulation	0	-	Real-time
A5-02	0xA502	Dead-zone compensation	0: Disable 1: Enable	1	-	At stop
A5-03	0xA503	Random PWM depth	0–10	0	-	Real-time
A5-04	0xA504	Fast current limit	0: Disable 1: Enable	0	-	Real-time
A5-05	0xA505	Sampling delay	1–13	5	-	Real-time
A5-06	0xA506	Undervoltage threshold	150.0 V to 455.0 V	350.0	V	Real-time
A5-07	0xA507	SVC optimization	0: No optimization 1: Optimization mode 1 2: Optimization mode 2	1	-	At stop
A6-00	0xA600	Curve 4 minimum input	-10.00 V to +10.00 V	0.00	V	Real-time
A6-01	0xA601	Percentage corresponding to curve 4 minimum input	-100.0% to +100.0%	0.0	%	Real-time
A6-02	0xA602	Input of curve 4 inflexion point 1	-10.00 V to +10.00 V	3.00	V	Real-time
A6-03	0xA603	Percentage corresponding to input of curve 4 inflexion point 1	-100.0% to +100.0%	30.0	%	Real-time
A6-04	0xA604	Input of curve 4 inflexion 2	-10.00 V to +10.00 V	6.00	V	Real-time
A6-05	0xA605	Percentage corresponding to input of curve 4 inflexion 2	-100.0% to +100.0%	60.0	%	Real-time
A6-06	0xA606	Curve 4 maximum input	-10.00 V to +10.00 V	10.00	V	Real-time
A6-07	0xA607	Percentage corresponding to curve 4 maximum input	-100.0% to +100.0%	100.0	%	Real-time
A6-08	0xA608	Curve 5 minimum input	-10.00 V to +10.00 V	-10.00	V	Real-time
A6-09	0xA609	Percentage corresponding to curve 5 minimum input	-100.0% to +100.0%	-100.0	%	Real-time
A6-10	0xA60A	Input of curve 5 inflexion 1	-10.00 V to +10.00 V	-3.00	V	Real-time
A6-11	0xA60B	Percentage corresponding to input of curve 5 inflexion 1	-100.0% to +100.0%	-30.0	%	Real-time
A6-12	0xA60C	Input of curve 5 inflexion 2	-10.00 V to +10.00 V	3.00	V	Real-time

Code	Communication Address	Name	Value Range	Default	Unit	Change Mode
A6-13	0xA60D	Percentage corresponding to input of curve 5 inflexion 2	-100.0% to +100.0%	30.0	%	Real-time
A6-14	0xA60E	Curve 5 maximum input	-10.00 V to 10.00 V	10.00	V	Real-time
A6-15	0xA60F	Percentage corresponding to curve 5 maximum input	-100.0% to +100.0%	100.0	%	Real-time
A6-16	0xA610	AI1 gain	-10.00 to +10.00	1.00	-	Real-time
A6-17	0xA611	AI1 offset	-100.0% to +100.0%	0.0	%	Real-time
A6-18	0xA612	AI2 gain	-10.00 to +10.00	1.00	-	Real-time
A6-19	0xA613	AI2 offset	-100.0% to +100.0%	0.0	%	Real-time
A6-20	0xA614	AI3 gain	-10.00 to +10.00	1.00	-	Real-time
A6-21	0xA615	AI3 offset	-100.0% to +100.0%	0.0	%	Real-time
A6-24	0xA618	Jump point of AI1 input corresponding setting	-100.0% to +100.0%	0.0	%	Real-time
A6-25	0xA619	Jump amplitude of AI1 input corresponding setting	0.0% to +100.0%	0.5	%	Real-time
A6-26	0xA61A	Jump point of AI3 setting	-100.0% to +100.0%	0.0	%	Real-time
A6-27	0xA61B	Jump amplitude of AI3 setting	0.0% to +100.0%	0.5	%	Real-time
A6-28	0xA61C	Jump point of AI2 setting	-100.0% to +100.0%	0.0	%	Real-time
A6-29	0xA61D	Jump amplitude of AI2 setting	0.0% to +100.0%	0.5	%	Real-time
A9-00	0xA900	Online auto-tuning on the rotor time constant of asynchronous motors	0: Disabled 1: Enabled	0	-	Real-time
A9-04	0xA904	Maximum torque limit coefficient in the field-weakening range for asynchronous motors	30 to 150	80	-	Real-time
A9-05	0xA905	Speed filter of asynchronous motors in SVC mode	5 ms to 32 ms	15	ms	Real-time
A9-06	0xA906	Speed feedback handling in speed control of asynchronous motors in SVC mode	0: No operation 1: Minimum synchronization frequency limited based on load change 2: Reserved 3: Reserved	0	-	Real-time
A9-07	0xA907	Magnetic field regulation bandwidth of asynchronous motor in SVC mode	0.0 to 8.0	2.0	-	Real-time

Code	Communication Address	Name	Value Range	De fault	Unit	Change Mode
A9-08	0xA908	Low-speed running current of asynchronous motor in SVC mode	30 to 170	100	-	Real-time
A9-09	0xA909	Switchover frequency of output fixed current for asynchronous motor in SVC mode	2.0 Hz to 100.0 Hz	3.0	Hz	Real-time
A9-10	0xA90A	Speed fluctuation suppression coefficient of asynchronous motor in SVC mode	0–6	3	-	Real-time
A9-11	0xA90B	Acceleration/Deceleration time of asynchronous motors in SVC mode	0.1s to 3000.0s	20.0	s	Real-time
A9-12	0xA90C	Quick auto-tuning of stator resistance before asynchronous motor startup	0: Disabled 1: Enabled	0	-	Real-time
A9-13	0xA90D	Quick auto-tuning of stator resistance coefficient 1 of asynchronous motors	0 to 65535	10	-	At stop
A9-14	0xA90E	Quick auto-tuning of stator resistance coefficient 2 for asynchronous motors	0 to 65535	10	-	At stop
A9-15	0xA90F	Quick auto-tuning of stator resistance coefficient 3 for asynchronous motors	0 to 65535	0	-	At stop
A9-17	0xA911	Synchronous motor real-time angle	0 to 65535	0	-	Unchange able
A9-18	0xA912	Initial position angle detection of synchronous motor	0: Detected upon running 1: Not detected 2: Detected upon initial power-on	0	-	Real-time
A9-20	0xA914	Flux weakening mode	0: Automatic mode 1: Synchronous motor adjustment mode 2: Synchronous motor hybrid mode 3: Disabled	1	-	At stop
A9-21	0xA915	Flux weakening gain of synchronous motors	0 to 50	5	-	Real-time
A9-22	0xA916	Upper limit margin of synchronous motor output voltage	0% to 50%	5	%	Real-time
A9-23	0xA917	Maximum force adjustment gain of synchronous motors	20% to 300%	100	%	Real-time

Code	Communication Address	Name	Value Range	De fault	Unit	Change Mode
A9-24	0xA918	Exciting current adjustment gain calculated by synchronous motor	40% to 200%	100	%	Real-time
A9-25	0xA919	Estimated speed integral gain of synchronous motor in SVC mode	5 to 1000	30	-	Real-time
A9-26	0xA91A	Estimated speed proportional gain of synchronous motor in SVC mode	5 to 300	20	-	Real-time
A9-27	0xA91B	Estimated speed filter of synchronous motor in SVC mode	10 to 2000	100	-	Real-time
A9-28	0xA91C	Minimum carrier frequency of synchronous motor in SVC mode	8 to 65535	20	-	Real-time
A9-29	0xA91D	Low speed excitation current of synchronous motor in SVC mode	0% to 80%	30	%	Real-time
A9-40	0xA928	Closed-loop current at low speed (used for PMVVC)	0: Disable 1: Enable	0	-	At stop
A9-41	0xA929	Low-speed closed-loop current (used for PMVVCVVC)	30 to 200	50	-	At stop
A9-42	0xA92A	Oscillation suppression damping coefficient (used for PMVVCVVC)	0 to 500	100	-	Real-time
A9-43	0xA92B	Reserved	0 to 65535	0	-	Unchange able
A9-44	0xA92C	Initial position compensation angle (used for PMVVCVVC)	0 to 5	0	-	At stop
A9-45	0xA92D	Low-speed handling of synchronous motor	0: Disable 1: Enable	0	-	At stop
A9-46	0xA92E	Switchover frequency for low-speed handling of synchronous motor	0.01 Hz to 655.35 Hz	5.00	Hz	At stop
A9-47	0xA92F	Low-speed handling current of synchronous motor	10 to 200	100	-	At stop
A9-48	0xA930	Feedback suppression coefficient for Low-speed handling of synchronous motor	0 to 300	32	-	At stop

Code	Communication Address	Name	Value Range	Default	Unit	Change Mode
A9-51	0xA933	Advanced settings for parameter auto-tuning of asynchronous motor	Ones: Rotor resistance and leakage inductance DC offset 0: Standard offset 1: Large offset Tens: New rotor resistance and leakage inductance auto-tuning algorithm 0: Disable 1: Enable Hundreds: New mutual inductance static auto-tuning algorithm 0: Disable 1: Enable Thousands: Stator resistance auto-tuning algorithm 0: Current open loop 1: Current closed loop	111	-	At stop
A9-52	0xA934	Feedback torque (U0-06)	0: The motoring torque direction is positive and the generating torque direction is negative. 1: The torque direction that is the same as the forward speed direction is positive, and the torque direction that is the same as the reverse speed direction is negative.	1	-	Real-time
AD-00	0xAD00	Background oscilloscope start/stop	0 to 1	1	-	Real-time
AD-01	0xAD01	Channel 1 parameter	0 to 999	0	-	Real-time
AD-02	0xAD02	Channel 2 parameter	0 to 999	0	-	Real-time
AD-03	0xAD03	Channel 3 parameter	0 to 999	0	-	Real-time
AD-04	0xAD04	Channel 4 parameter	0 to 999	0	-	Real-time
AD-05	0xAD05	Sampling interval (carrier cycle)	1 to 65535	1	-	Real-time
AD-06	0xAD06	Triggering object A	0 to 999	1	-	Real-time
AD-07	0xAD07	Triggering condition A	0: > 1: = 2: <	0	-	Real-time
AD-08	0xAD08	Triggering level A	0 to 65535	0	-	Real-time
AD-09	0xAD09	Triggering object B	0 to 999	1	-	Real-time
AD-10	0xAD0A	Triggering condition B	0: > 1: = 2: <	0	-	Real-time
AD-11	0xAD0B	Triggering level B	0 to 65535	0	-	Real-time
AD-12	0xAD0C	Triggering condition	0: When condition A is satisfied	0	-	Real-time

Code	Communication Address	Name	Value Range	Default	Unit	Change Mode
			1: When condition B is satisfied 2: When condition A and condition B are satisfied			
AD-13	0xAD0D	Carrier frequency cycle during data storage	0 to 65535	0	-	Unchangeable
AD-14	0xAD0E	Fault value	0 to 65535	0	-	Unchangeable
AD-15	0xAD0F	Data saving cycle	0: Carrier cycle 1: 0.5 ms 2: 2 ms	0	-	Real-time
AD-16	0xAD10	Data reading mode for host controller	0: From RAM 1: From flash	0	-	Real-time
AD-17	0xAD11	Flash rewriting	0: Disable 1: Enable	1	-	Real-time
AF-00	0xAF00	RPDO1-SubIndex0-H	0 to 65535	0	-	Real-time
AF-01	0xAF01	RPDO1-SubIndex0-L	0 to 65535	0	-	Real-time
AF-02	0xAF02	RPDO1-SubIndex1-H	0 to 65535	0	-	Real-time
AF-03	0xAF03	RPDO1-SubIndex1-L	0 to 65535	0	-	Real-time
AF-04	0xAF04	RPDO1-SubIndex2-H	0 to 65535	0	-	Real-time
AF-05	0xAF05	RPDO1-SubIndex2-L	0 to 65535	0	-	Real-time
AF-06	0xAF06	RPDO1-SubIndex3-H	0 to 65535	0	-	Real-time
AF-07	0xAF07	RPDO1-SubIndex3-L	0 to 65535	0	-	Real-time
AF-08	0xAF08	RPDO2-SubIndex0-H	0 to 65535	0	-	Real-time
AF-09	0xAF09	RPDO2-SubIndex0-L	0 to 65535	0	-	Real-time
AF-10	0xAF0A	RPDO2-SubIndex1-H	0 to 65535	0	-	Real-time
AF-11	0xAF0B	RPDO2-SubIndex1-L	0 to 65535	0	-	Real-time
AF-12	0xAF0C	RPDO2-SubIndex2-H	0 to 65535	0	-	Real-time
AF-13	0xAF0D	RPDO2-SubIndex2-L	0 to 65535	0	-	Real-time
AF-14	0xAF0E	RPDO2-SubIndex3-H	0 to 65535	0	-	Real-time
AF-15	0xAF0F	RPDO2-SubIndex3-L	0 to 65535	0	-	Real-time
AF-16	0xAF10	RPDO3-SubIndex0-H	0 to 65535	0	-	Real-time
AF-17	0xAF11	RPDO3-SubIndex0-L	0 to 65535	0	-	Real-time
AF-18	0xAF12	RPDO3-SubIndex1-H	0 to 65535	0	-	Real-time
AF-19	0xAF13	RPDO3-SubIndex1-L	0 to 65535	0	-	Real-time
AF-20	0xAF14	RPDO3-SubIndex2-H	0 to 65535	0	-	Real-time
AF-21	0xAF15	RPDO3-SubIndex2-L	0 to 65535	0	-	Real-time
AF-22	0xAF16	RPDO3-SubIndex3-H	0 to 65535	0	-	Real-time
AF-23	0xAF17	RPDO3-SubIndex3-L	0 to 65535	0	-	Real-time
AF-24	0xAF18	RPDO4-SubIndex0-H	0 to 65535	0	-	Real-time
AF-25	0xAF19	RPDO4-SubIndex0-L	0 to 65535	0	-	Real-time
AF-26	0xAF1A	RPDO4-SubIndex1-H	0 to 65535	0	-	Real-time
AF-27	0xAF1B	RPDO4-SubIndex1-L	0 to 65535	0	-	Real-time
AF-28	0xAF1C	RPDO4-SubIndex2-H	0 to 65535	0	-	Real-time
AF-29	0xAF1D	RPDO4-SubIndex2-L	0 to 65535	0	-	Real-time
AF-30	0xAF1E	RPDO4-SubIndex3-H	0 to 65535	0	-	Real-time

Code	Communication Address	Name	Value Range	De fault	Unit	Change Mode
AF-31	0xAF1F	RPDO4-SubIndex3-L	0 to 65535	0	-	Real-time
AF-32	0xAF20	TPDO1-SubIndexO-H	0 to 65535	0	-	Real-time
AF-33	0xAF21	TPDO1-SubIndexO-L	0 to 65535	0	-	Real-time
AF-34	0xAF22	TPDO1-SubIndex1-H	0 to 65535	0	-	Real-time
AF-35	0xAF23	TPDO1-SubIndex1-L	0 to 65535	0	-	Real-time
AF-36	0xAF24	TPDO1-SubIndex2-H	0 to 65535	0	-	Real-time
AF-37	0xAF25	TPDO1-SubIndex2-L	0 to 65535	0	-	Real-time
AF-38	0xAF26	TPDO1-SubIndex3-H	0 to 65535	0	-	Real-time
AF-39	0xAF27	TPDO1-SubIndex3-L	0 to 65535	0	-	Real-time
AF-40	0xAF28	TPDO2-SubIndex0-H	0 to 65535	0	-	Real-time
AF-41	0xAF29	TPDO2-SubIndex0-L	0 to 65535	0	-	Real-time
AF-42	0xAF2A	TPDO2-SubIndex1-H	0 to 65535	0	-	Real-time
AF-43	0xAF2B	TPDO2-SubIndex1-L	0 to 65535	0	-	Real-time
AF-44	0xAF2C	TPDO2-SubIndex2-H	0 to 65535	0	-	Real-time
AF-45	0xAF2D	TPDO2-SubIndex2-L	0 to 65535	0	-	Real-time
AF-46	0xAF2E	TPDO2-SubIndex3-H	0 to 65535	0	-	Real-time
AF-47	0xAF2F	TPDO2-SubIndex3-L	0 to 65535	0	-	Real-time
AF-48	0xAF30	TPDO3-SubIndex0-H	0 to 65535	0	-	Real-time
AF-49	0xAF31	TPDO3-SubIndex0-L	0 to 65535	0	-	Real-time
AF-50	0xAF32	TPDO3-SubIndex1-H	0 to 65535	0	-	Real-time
AF-51	0xAF33	TPDO3-SubIndex1-L	0 to 65535	0	-	Real-time
AF-52	0xAF34	TPDO3-SubIndex2-H	0 to 65535	0	-	Real-time
AF-53	0xAF35	TPDO3-SubIndex2-L	0 to 65535	0	-	Real-time
AF-54	0xAF36	TPDO3-SubIndex3-H	0 to 65535	0	-	Real-time
AF-55	0xAF37	TPDO3-SubIndex3-L	0 to 65535	0	-	Real-time
AF-56	0xAF38	TPDO4-SubIndex0-H	0 to 65535	0	-	Real-time
AF-57	0xAF39	TPDO4-SubIndex0-L	0 to 65535	0	-	Real-time
AF-58	0xAF3A	TPDO4-SubIndex1-H	0 to 65535	0	-	Real-time
AF-59	0xAF3B	TPDO4-SubIndex1-L	0 to 65535	0	-	Real-time
AF-60	0xAF3C	TPDO4-SubIndex2-H	0 to 65535	0	-	Real-time
AF-61	0xAF3D	TPDO4-SubIndex2-L	0 to 65535	0	-	Real-time
AF-62	0xAF3E	TPDO4-SubIndex3-H	0 to 65535	0	-	Real-time
AF-63	0xAF3F	TPDO4-SubIndex3-L	0 to 65535	0	-	Real-time
AF-66	0xAF42	Number of valid RPDOs	0 to 65535	0	-	Unchange able
AF-67	0xAF43	Number of valid TPDOs	0 to 65535	0	-	Unchange able
B7-00	0xB700	Target frequency limit	0.00 Hz to 20.00 Hz	2.00	Hz	Real-time
B7-01	0xB701	Brake release frequency (forward)	0.00 Hz to 20.00 Hz	2.00	Hz	Real-time
B7-02	0xB702	Brake release frequency (reverse)	0.00 Hz to 20.00 Hz	2.00	Hz	Real-time
B7-03	0xB703	Brake release torque (forward)	0.0% to 200.0%	30.0	%	Real-time

Code	Communication Address	Name	Value Range	De fault	Unit	Change Mode
B7-04	0xB704	Brake release torque (reverse)	0.0% to 200.0%	30.0	%	Real-time
B7-05	0xB705	Brake release time	0.00s to 5.00s	0.50	s	Real-time
B7-06	0xB706	Brake engage frequency (forward)	0.00 Hz to 20.00 Hz	2.00	Hz	Real-time
B7-07	0xB707	Brake engage frequency (reverse)	0.00 Hz to 20.00 Hz	2.00	Hz	Real-time
B7-08	0xB708	Brake engage delay	0.00s to 5.00s	0.00	s	Real-time
B7-09	0xB709	Brake engage time	0.00s to 5.00s	0.50	s	Real-time
B7-10	0xB70A	Excitation time at stop	0.00s to 500.00s	0.00	s	Real-time
B7-11	0xB70B	Restart waiting time	0.00s to 15.00s	0.30	s	Real-time
B7-12	0xB70C	Startup direction	0: Same as the running direction 1:Forward	0	-	Real-time
B7-13	0xB70D	Pre-torque source	0: Digital setting 1: Pre-torque 2: Disable	2	-	Real-time
B7-14	0xB70E	Pre-torque setting value (forward)	0.0% to 200.0%	30.0	%	Real-time
B7-15	0xB70F	Pre-torque setting value (reverse)	0.0% to 200.0%	30.0	%	Real-time
B7-16	0xB710	Current acceleration/ deceleration time	0.00s to 5.00s	0.50	s	Real-time
B7-17	0xB711	Reverse running	0: Disable 1: Enable (FVC)	0	-	Real-time
B7-18	0xB712	Brake release timeout period	0.00s to 5.00s	2.00	s	Real-time
B7-21	0xB715	Abnormality detection period of frequency	0.00s to 1.00s	0.50	s	Real-time
B7-22	0xB716	Frequency following error	0% to 30%	20	%	Real-time
B7-23	0xB717	Frequency following detection time	0.00s to 1.00s	0.50	s	Real-time
B7-24	0xB718	Detection time for torque to reach the limit	0.00s to 5.00s	0.00	s	Real-time
U0-00	0x7000	Running frequency	0.00 Hz	0.00	Hz	Unchange able
U0-01	0x7001	Frequency reference	0.00 Hz	0.00	Hz	Unchange able
U0-02	0x7002	Bus voltage	0.0 V	0.0	V	Unchange able
U0-03	0x7003	Output voltage	0 V	0	V	Unchange able
U0-04	0x7004	Output current	0.00 A	0.00	A	Unchange able
U0-05	0x7005	Output power	0.0 kW	0.0	kW	Unchange able

Code	Communication Address	Name	Value Range	De fault	Unit	Change Mode
U0-06	0x7006	Output torque	0.0%	0.0	%	Unchangeable
U0-07	0x7007	DI state	0	0	-	Unchangeable
U0-08	0x7008	DO/RO output mode	0	0	-	Unchangeable
U0-09	0x7009	AI1 voltage	0.00 V	0.00	V	Unchangeable
U0-10	0x700A	AI2 voltage	0.00 V	0.00	V	Unchangeable
U0-11	0x700B	AI3 voltage	0.00 V	0.00	V	Unchangeable
U0-12	0x700C	Count value	0	0	-	Unchangeable
U0-13	0x700D	Length value	0	0	-	Unchangeable
U0-14	0x700E	Load speed display	0	0	-	Unchangeable
U0-15	0x700F	PID reference	0	0	-	Unchangeable
U0-16	0x7010	PID feedback	0	0	-	Unchangeable
U0-17	0x7011	PLC stage	0	0	-	Unchangeable
U0-19	0x7013	Feedback speed	0.00 Hz	0.00	Hz	Unchangeable
U0-20	0x7014	Remaining running time	0.0 min	0.0	min	Unchangeable
U0-21	0x7015	AI1 gain and voltage after offset	0.000 V	0.000	V	Unchangeable
U0-22	0x7016	AI2 gain and voltage after offset	0.000 V	0.000	V	Unchangeable
U0-23	0x7017	AI3 gain and voltage after offset	0.000 V	0.000	V	Unchangeable
U0-24	0x7018	Linear speed	0 m/min	0	m/min	Unchangeable
U0-25	0x7019	Current power-on time	0 min	0	min	Unchangeable
U0-26	0x701A	Current running time	0.0 min	0.0	min	Unchangeable
U0-28	0x701C	Reference value set through communication	0.00%	0.00	%	Unchangeable
U0-30	0x701E	Main frequency X display	0.00 Hz	0.00	Hz	Unchangeable
U0-31	0x701F	Auxiliary frequency Y display	0.00 Hz	0.00	Hz	Unchangeable

Code	Communication Address	Name	Value Range	De fault	Unit	Change Mode
U0-33	0x7021	Synchronous motor rotor position	0.0°	0.0	°	Unchangeable
U0-35	0x7023	Target torque	0.0%	0.0	%	Unchangeable
U0-37	0x7025	Power factor angle	0.0°	0.0	°	Unchangeable
U0-39	0x7027	Target voltage upon V/f separation	0 V	0	V	Unchangeable
U0-40	0x7028	Output voltage upon V/f separation	0 V	0	V	Unchangeable
U0-41	0x7029	DI input state visual display	0	0	-	Unchangeable
U0-42	0x702A	DO/RO output state visual display	0	0	-	Unchangeable
U0-43	0x702B	DI function state visual display 1	0	0	-	Unchangeable
U0-44	0x702C	DI function state visual display 2	0	0	-	Unchangeable
U0-45	0x702D	Fault code	0	0	-	Unchangeable
U0-46	0x702E	Fault subcode	0	0	-	Unchangeable
U0-47	0x702F	Drive unit temperature	0°C	0	°C	Unchangeable
U0-48	0x7030	Voltage received through PTC channel 1	0.000 V	0.000	V	Unchangeable
U0-49	0x7031	Voltage received through PTC channel 2	0.000 V	0.000	V	Unchangeable
U0-50	0x7032	Voltage received through PTC channel 3	0.000 V	0.000	V	Unchangeable
U0-51	0x7033	PTC1 temperature	0°C	0	°C	Unchangeable
U0-52	0x7034	PTC2 temperature	0°C	0	°C	Unchangeable
U0-53	0x7035	PTC3 temperature	0°C	0	°C	Unchangeable
U0-54	0x7036	Motor speed	0 RPM	0	RPM	Unchangeable
U0-55	0x7037	Station number allocated automatically	0	0	-	Unchangeable
U0-56	0x7038	Recognized axis type	0	0	-	Unchangeable
U0-61	0x703D	AC drive operation status word 1	0	0	-	Unchangeable
U0-64	0x7040	Special protocol status word	0	0	-	Unchangeable

Code	Communication Address	Name	Value Range	De fault	Unit	Change Mode
U0-68	0x7044	AC drive operation status word 2	0	0	-	Unchange able
U0-78	0x704E	Rated AC drive current	0.0 A	0.0	A	Unchange able
U0-79	0x704F	AC drive power	0.0 kW	0.0	kW	Unchange able
U0-81	0x7051	Local LED status	0	0	-	Unchange able
U0-88	0x7058	Warning code	0	0	-	Unchange able
U0-89	0x7059	Warning subcode	0	0	-	Unchange able
U0-90	0x705A	Percentage of preset fan speed	0	0	-	Unchange able
U0-91	0x705B	PTC1 mode	0	0	-	Unchange able
U0-92	0x705C	PTC2 mode	0	0	-	Unchange able
U0-93	0x705D	PTC3 mode	0	0	-	Unchange able
U0-95	0x705F	STO initialization flag	0	0	-	Unchange able
U0-96	0x7060	STO status word monitoring	0	0	-	Unchange able
U0-97	0x7061	STO model	0	0	-	Unchange able
U0-98	0x7062	STO AD sampling value	0	0	-	Unchange able
U0-99	0x7063	STO internal execution flag	0	0	-	Unchange able
U3-16	0x7310	Frequency set by communication	0 to 65535	0	-	Unchange able
U3-17	0x7311	Communication control command	0 to 65535	0	-	Unchange able
U3-18	0x7312	Communication control DO/RO	0 to 65535	0	-	Unchange able
U4-00	0x7400	Support mode (6502h high-order bit)	0 to 65535	0	-	Unchange able
U4-01	0x7401	Support mode (6502h low-order bit)	0 to 65535	0	-	Unchange able
U4-02	0x7402	Fault code (603Fh)	0 to 65535	0	-	Unchange able
U4-03	0x7403	Control word (6040h)	0 to 65535	0	-	Unchange able
U4-04	0x7404	Status word (6041h)	0 to 65535	0	-	Unchange able

Code	Communication Address	Name	Value Range	De fault	Unit	Change Mode
U4-05	0x7405	Target speed (6042h)	-32767 to +32767	0	-	Unchange able
U4-14	0x740E	Acceleration time (6048h-2)	0 to 65535	0	-	Unchange able
U4-16	0x7410	Deceleration setting (6049h-1 low-order bit)	0 to 65535	0	-	Unchange able
U4-17	0x7411	Deceleration time (6049h-2)	0 to 65535	0	-	Unchange able
U4-18	0x7412	Stop mode upon emergency (605Ah)	-32767 to +32767	0	-	Unchange able
U4-22	0x7416	Stop mode upon fault (605Eh)	-32767 to +32767	0	-	Unchange able
U5-00	0x7500	Power supply unit DI - hardware resource	0 to 65535	0	-	Unchange able
U5-01	0x7501	Power supply unit DO/RO - hardware resource	0 to 65535	0	-	Unchange able
U5-02	0x7502	Power supply unit AI - hardware resource	0 to 65535	0	-	Unchange able
U5-04	0x7504	Expansion card 1 - DI hardware resource	0 to 65535	0	-	Unchange able
U5-05	0x7505	Expansion card 1 - DO/RO hardware resource	0 to 65535	0	-	Unchange able
U5-06	0x7506	Expansion card 1 - AI hardware resource	0 to 65535	0	-	Unchange able
U5-08	0x7508	Expansion card 2 - DI hardware resource	0 to 65535	0	-	Unchange able
U5-09	0x7509	Expansion card 2 - DO/RO hardware resource	0 to 65535	0	-	Unchange able
U5-10	0x750A	Expansion card 2 - AI hardware resource	0 to 65535	0	-	Unchange able
U5-12	0x750C	Expansion card 3 - DI hardware resource	0 to 65535	0	-	Unchange able
U5-13	0x750D	Expansion card 3 - DO/RO hardware resource	0 to 65535	0	-	Unchange able
U5-14	0x750E	Expansion card 3 - AI hardware resource	0 to 65535	0	-	Unchange able
U5-20	0x7514	Power supply unit DI - mapping relation	0 to 65535	0	-	Unchange able
U5-21	0x7515	Power supply unit DO/RO - mapping relation	0 to 65535	0	-	Unchange able
U5-22	0x7516	Power supply unit AI - mapping relation	0 to 65535	0	-	Unchange able
U5-24	0x7518	Expansion card 1 - DI mapping relation	0 to 65535	0	-	Unchange able

Code	Communication Address	Name	Value Range	Default	Unit	Change Mode
U5-25	0x7519	Expansion card 1 - DO/RO mapping relation	0 to 65535	0	-	Unchangeable
U5-26	0x751A	Expansion card 1 - AI mapping relation	0 to 65535	0	-	Unchangeable
U5-28	0x751C	Expansion card 2 - DI mapping relation	0 to 65535	0	-	Unchangeable
U5-29	0x751D	Expansion card 2 - DO/RO mapping relation	0 to 65535	0	-	Unchangeable
U5-30	0x751E	Expansion card 2 - AI mapping relation	0 to 65535	0	-	Unchangeable
U5-32	0x7520	Expansion card 3 - DI mapping relation	0 to 65535	0	-	Unchangeable
U5-33	0x7521	Expansion card 3 - DO/RO mapping relation	0 to 65535	0	-	Unchangeable
U5-34	0x7522	Expansion card 3 - AI mapping relation	0 to 65535	0	-	Unchangeable
U5-40	0x7528	Power supply unit - DI data	0 to 65535	0	-	Unchangeable
U5-41	0x7529	Expansion card 1 - DI data	0 to 65535	0	-	Unchangeable
U5-42	0x752A	Expansion card 2 - DI data	0 to 65535	0	-	Unchangeable
U5-43	0x752B	Expansion card 3 - DI data	0 to 65535	0	-	Unchangeable
U5-45	0x752D	Drive unit DO/ RO data	0 to 65535	0	-	Unchangeable
U5-50	0x7532	Power supply unit - AI1 function	0 to 65535	0	-	Unchangeable
U5-51	0x7533	Power supply unit - AI2 function	0 to 65535	0	-	Unchangeable
U5-52	0x7534	Expansion card 1 - AI1 function	0 to 65535	0	-	Unchangeable
U5-53	0x7535	Expansion card 1 - AI2 function	0 to 65535	0	-	Unchangeable
U5-54	0x7536	Expansion card 2 - AI1 function	0 to 65535	0	-	Unchangeable
U5-55	0x7537	Expansion card 2 - AI2 function	0 to 65535	0	-	Unchangeable
U5-56	0x7538	Expansion card 3 - AI1 function	0 to 65535	0	-	Unchangeable
U5-57	0x7539	Expansion card 3 - AI2 function	0 to 65535	0	-	Unchangeable
U5-58	0x753A	Reserved	0 to 65535	0	-	Unchangeable
U5-59	0x753B	Reserved	0 to 65535	0	-	Unchangeable

Code	Communication Address	Name	Value Range	De fault	Unit	Change Mode
U5-60	0x753C	Power supply unit - AI1 voltage	-32767 to 32767	0	-	Unchange able
U5-61	0x753D	Power supply unit - AI2 voltage	-32767 to +32767	0	-	Unchange able
U5-62	0x753E	Expansion card 1 - AI1 voltage	-32767 to +32767	0	-	Unchange able
U5-63	0x753F	Expansion card 1 - AI2 voltage	-32767 to +32767	0	-	Unchange able
U5-64	0x7540	Expansion card 2 - AI1 voltage	-32767 to +32767	0	-	Unchange able
U5-65	0x7541	Expansion card 2 - AI2 voltage	-32767 to +32767	0	-	Unchange able
U5-66	0x7542	Expansion card 3 - AI1 voltage	-32767 to +32767	0	-	Unchange able
U5-67	0x7543	Expansion card 3 - AI2 voltage	-32767 to +32767	0	-	Unchange able

4.7 List of Fault Codes

The following faults may occur during the use of the AC drive. Troubleshoot the faults according to the solutions described in the following table.

Table 4–3 Fault codes

Fault Name	Panel Display	Possible Cause	Solution	Fault Type
STO model identification error	E01.06	The hardware is faulty.	Check the AC drive nameplate to confirm whether the AC drive has the STO function. If not, contact the technical support personnel.	Axis fault
AC drive axis type identification setting error	E01.07	The hardware is faulty.	Check the AC drive nameplate to confirm the axis type (single-axis or dual-axis) of the AC drive.	Axis fault
Overcurrent during acceleration	E02.04	1. A grounding fault or short circuit exists in the output circuit of the AC drive. 2. The SVC control mode is adopted, and motor auto-tuning is not performed. 3. The set acceleration time is too short.	1. Check the motor and the relay contactor and make sure that they are not short-circuited. 2. Set the motor parameters according to the motor nameplate and perform motor auto-tuning. 3. Increase the acceleration time (F0-17). 4. Ensure that overcurrent stall suppression (F3-19) is enabled.The overcurrent stall action current (F3-18) is too large. Adjust it to a value between 120% and	Axis fault
	E02.05			Axis fault
	E02.06			Axis fault

Fault Name	Panel Display	Possible Cause	Solution	Fault Type
		4. The overcurrent stall suppression setting is improper. 5. The manual torque boost or V/f curve is improper. 6. The motor is started while rotating. 7. The AC drive suffers external interference.	160%.The overcurrent stall suppression gain (F3-20) is too small. Adjust it to a value between 20 and 40. 5. Adjust the manual torque boost or V/f curve. 6. Select the flying start mode or start the AC drive after the motor stops. 7. Check whether the fault current reaches the overcurrent stall suppression current (F3-18) by viewing the fault log. If not, the fault is possibly caused by external interference. In this case, find out the external interference source and rectify the fault.If no external interference source is found, the drive board or Hall device may be damaged. In this case, contact the manufacturer for replacement.	
Overcurrent during deceleration	E03.04	1. A grounding fault or short circuit exists in the output circuit of the AC drive. 2. The SVC control mode is adopted, and motor auto-tuning is not performed. 3. The set deceleration time is too short. 4. The overcurrent stall suppression setting is improper. 5. The power supply unit is not provided with a braking unit and no braking resistor is installed. 6. The AC drive suffers external interference.	1. Check the motor and make sure that the motor is not short-circuited or open-circuited. 2. Set the motor parameters according to the motor nameplate and perform motor auto-tuning. 3. Increase the deceleration time (F0-18). 4. Ensure that overcurrent stall suppression (F3-19) is enabled.The overcurrent stall action current (F3-18) is too large. Adjust it to a value between 120% and 150%.The overcurrent stall suppression gain (F3-20) is too small. Adjust it to a value between 20 and 40. 5. Replace the power supply unit with one that has a braking unit and install a braking resistor. 6. Check whether the fault current reaches the overcurrent stall suppression current (F3-18) by viewing the fault log. If not, the fault is possibly caused by external interference. In this case, find out the external interference source and rectify the fault.If no external interference source is found, the drive board or Hall device may be damaged. In this case, contact the manufacturer for replacement.	Axis fault
	E03.05			Axis fault
	E03.06			Axis fault

Fault Name	Panel Display	Possible Cause	Solution	Fault Type
Overcurrent at constant speed	E04.04	1. A grounding fault or short circuit exists in the output circuit of the AC drive. 2. The SVC control mode is adopted, and motor auto-tuning is not performed. 3. The overcurrent stall suppression setting is improper. 4. The AC drive power rating is too low. 5. The AC drive suffers external interference.	1. Check the motor and make sure that the motor is not short-circuited or open-circuited. 2. Set the motor parameters according to the motor nameplate and perform motor auto-tuning. 3. Ensure that overcurrent stall suppression (F3-19) is enabled.The overcurrent stall action current (F3-18) is too large. Adjust it to a value between 120% and 150%.The overcurrent stall suppression gain (F3-20) is too small. Adjust it to a value between 20 and 40. 4. During stable running, if the running current exceeds the rated motor current or rated output current of the AC drive, replace the AC drive with one of higher power rating. 5. Check whether the fault current reaches the overcurrent stall suppression current (F3-18) by viewing the fault log. If not, the fault is possibly caused by external interference. In this case, find out the external interference source and rectify the fault.If no external interference source is found, the drive board or Hall device may be damaged. In this case, contact the manufacturer for replacement.	Axis fault
	E04.05			Axis fault
	E04.06			Axis fault
Overvoltage during acceleration	E05.00	The input grid voltage is too large.	Adjust the input grid voltage to the normal range.	Axis fault
		An external force drives the motor during acceleration.	Cancel the external force or install a braking resistor. The maximum rise frequency during overvoltage stall suppression (F3-26) is too low. Adjust it to a value between 5 Hz and 15 Hz when an external force is applied.	
		The overvoltage stall suppression parameters are set improperly.	Ensure that the overvoltage stall suppression function (F3-23) is enabled. The overvoltage stall suppression voltage (F3-22) is too large. Adjust it to a value between 700 V and 770 V. The overvoltage stall suppression frequency gain (F3-24) is too small. Adjust it to a value between 30 and 50.	

Fault Name	Panel Display	Possible Cause	Solution	Fault Type
		The power supply unit is not provided with a braking unit and no braking resistor is installed.	Replace the power supply unit with one that has a braking unit and install a braking resistor.	
		The acceleration time is too short.	Increase the acceleration time (F0-17).	
Overvoltage during deceleration	E06.00	The overvoltage stall suppression parameters are set improperly.	Ensure that the overvoltage stall suppression function (F3-23) is enabled. The overvoltage stall suppression voltage (F3-22) is too large. Adjust it to a value between 700 V and 770 V. The overvoltage stall suppression frequency gain (F3-24) is too small. Adjust it to a value between 30 and 50.	Axis fault
		An external force drives the motor during deceleration.	Cancel the external force or install a braking resistor. The maximum rise frequency during overvoltage stall suppression (F3-26) is too low. Adjust it to a value between 5 Hz and 15 Hz when an external force is applied.	
		The deceleration time is too short.	Increase the deceleration time (F0-18).	
		The power supply unit is not provided with a braking unit and no braking resistor is installed.	Replace the power supply unit with one that has a braking unit and install a braking resistor.	
Overvoltage at constant speed	E07.00	The overvoltage stall suppression parameters are set improperly.	Ensure that the overvoltage stall suppression function (F3-23) is enabled. The overvoltage stall suppression voltage (F3-22) is too large. Adjust it to a value between 700 V and 770 V. The overvoltage stall suppression frequency gain (F3-24) is too small. Adjust it to a value between 30 and 50.	Axis fault
		An external force drives the motor during running.	Cancel the external force or install a braking resistor. The maximum rise frequency during overvoltage stall suppression (F3-26) is too low. Adjust it to a value between 5 Hz and 15 Hz when an external force is applied.	
	E07.01	The bus voltage of the single-phase AC drive is too large.	Check whether the bus voltage of the single-phase AC drive exceeds 410.0 V.	Axis fault
Undervoltage	E09.00	An instantaneous power failure occurs.	Enable the power dip ride-through function (F9-63).	Axis fault

Fault Name	Panel Display	Possible Cause	Solution	Fault Type
		The input voltage of the AC drive is beyond the specified range.	Adjust the input voltage of the AC drive to the normal range.	
		The bus voltage is abnormal.	Contact the technical support personnel.	
		The power supply unit, the drive board of the drive unit, or the control board of the drive unit is abnormal.	Contact the technical support personnel.	
AC drive overload	E10.00	The load is too heavy or locked-rotor occurs.	Reduce the load and check the motor and mechanical conditions.	Axis fault
		The AC drive power rating is too low.	Replace the AC drive with one of higher power rating.	
		The SVC control mode is adopted, and motor auto-tuning is not performed.	Set the motor parameters according to the motor nameplate and perform motor auto-tuning.	
		The control mode is V/f control.	Reduce the torque boost (F3-01) reference in decrements of 1.0%, or set it to 0 (auto torque boost).	
Motor overload	E11.00	F9-01 (motor overload protection gain) is set improperly.	Set F9-01 correctly. Increase its value to prolong the motor overload time.	Axis fault
		The load is too heavy or locked-rotor occurs.	Reduce the load and check the motor and mechanical conditions.	
Input voltage exception	E12.01	Input voltage phase loss	Check the three-phase power supply and make sure that it is normal. Check the input cables and make sure that they are not broken. Check the input terminals and make sure that they are properly connected.	Power supply unit fault
	E12.04	The input three-phase voltage is too large.	Ensure that the input voltage does not exceed the rated value: Three-phase 380 V models: 576 V Single-phase 220 V models: 288 V	Power supply unit fault
Output phase loss	E13.00	The motor is faulty.	Check the motor for open circuit.	Axis fault
		The cable connecting the AC drive and the motor is abnormal.	Check the cable between the AC drive and the motor.	
		The three-phase outputs of the AC drive are unbalanced when the motor is running.	Check whether the motor three-phase winding is normal. If not, eliminate the fault.	
		The drive board or the IGBT is abnormal.	Contact the technical support personnel.	

Fault Name	Panel Display	Possible Cause	Solution	Fault Type
IGBT overheat	E14.00	The ambient temperature is too high.	Reduce the ambient temperature.	Power supply unit fault
		The air filter is blocked.	Clean the air filter.	
		The fan is damaged.	Replace the fan.	
		The IGBT thermistor is damaged.	Contact the technical support personnel.	
		The IGBT is damaged.	Contact the technical support personnel.	
External device fault	E15.01	An external fault signal is input through the multi-functional DI (NO).	Eliminate the external fault, ensure that the mechanical condition allows restart (F8-21), and reset the operation.	Axis fault
	E15.02	An external fault signal is input through the multi-functional DI (NC).	Eliminate the external fault, ensure that the mechanical condition allows restart (F8-21), and reset the operation.	Axis fault
Communication fault	E16.01	Modbus communication timeout	Check whether the Modbus master sends data within the set timeout period. Check whether the RS485 circuit is disconnected or suffers interference.	Axis fault
	A16.02	The protective cover for the connector is not installed.	Install a protective cover on the connector of the rightmost drive unit.	Axis fault
	E16.03	Station number allocation fails.	Power on all equipment. If the fault persists, replace the AC drive.	Axis fault
	E16.04	Continuous frame loss occurs on the extension card.	Ensure that the extension card is connected properly. Check whether F9-67 is set too small.	Axis fault
	E16.11	CANopen communication timeout	EtherCAT is disconnected. Make sure that the CAN communication cable is connected properly. Check parameters Fd-15 to Fd-17 to eliminate possible interference.	Axis fault
	E16.12	The PDO mapping configured for CANopen is inconsistent with the actual communication mapping.	The EtherCAT mapping is inconsistent with the PDO mapping. Check the PDO mapping parameters in group AF to make sure that the PDO configuration is correct.	Axis fault
	E16.13	Data exchange from the power supply unit to the drive unit times out.	Check whether the power supply unit works properly. If the power supply unit is faulty, contact the technical support personnel.	Axis fault
	E16.14	Data exchange from the power supply unit to the drive unit is abnormal.	The power supply unit is faulty. Contact the technical support personnel.	Axis fault
	E16.21	CANlink heartbeat times out.	Check that the CAN communication cable is correctly connected.	Axis fault

Fault Name	Panel Display	Possible Cause	Solution	Fault Type
			Check parameters Fd-15 to Fd-17 to eliminate possible interference.	
	E16.22	A CANlink station number conflict occurs.	Change duplicate CAN station numbers in the network to different ones by using Fd-13.	Axis fault
	E16.52	The EEPROM of the EtherCAT communication card is faulty.	1. If the programming or upgrading of the communication card fails, program the communication card again. 2. If this fault occurs during normal use, replace the communication card.	Axis fault
	E16.53	The slave control chip of the EtherCAT communication card is faulty.	1. If the programming or upgrading of the communication card fails, program the communication card again. 2. If this fault occurs during normal use, replace the communication card.	Axis fault
	E16.55	The EtherCAT system parameters are incorrect.	If the master station goes wrong, check whether it sends the sync frame (Fd-78). If not, make sure that TPDO and RPDO have been configured for the master PDO. If the master PDO is configured correctly, check the network port status (Fd-72 to Fd-77) and make sure that the communication cable is connected properly.	Axis fault
	E16.71	The master station goes offline during operation of the communication card.	Check whether the connection between the communication card and PLC is in poor contact. Make sure that they are properly connected.	Axis fault
	E16.72	The internal slave station goes offline during operation of communication card.	Check whether the connection between the communication card and power supply unit is in poor contact. Make sure that they are properly connected.	Axis fault
	E16.74	The communication card configuration is incorrect.	Check whether the configured slave station exists and ensure that startup with station lost is disabled (Fd-50 of the power supply unit is set to 0).	Axis fault
	E16.75	The drive unit mapping configured by using the communication card is incorrect.	Check the process data and the number of mapping relations configured for the drive unit, and make sure that they match.	Axis fault
	E16.76	The power supply unit mapping configured by using the communication card is incorrect.	Check the process data and the number of mapping relations configured for the power supply unit, and make sure that they match.	Axis fault

Fault Name	Panel Display	Possible Cause	Solution	Fault Type
Current sampling circuit damage	E18.01	Current sampling of the AC drive is abnormal.	Check whether the main circuit is powered on. Contact the manufacturer if the Hall sensor or the current sampling current is damaged.	Axis fault
Motor auto-tuning fault	E19.02 E19.04	Auto-tuning on the magnetic pole position angle of the synchronous motor fails.	Check whether the motor is disconnected or output phase loss occurs.	Axis fault
	E19.05	Auto-tuning on the magnetic pole initial position angle of the synchronous motor fails.	Increase the initial position angle detection current (F2-29).	Axis fault
	E19.06 E19.07 E19.08	Auto-tuning on the stator resistance fails.	Ensure that the motor is connected properly. Ensure that the rated motor current (F1-03) is set according to the motor nameplate.	Axis fault
	E19.09 E19.10	Auto-tuning on the transient leakage inductance of the asynchronous motor fails.	The motor is not connected or output phase loss occurs. Ensure that the motor is connected properly or the motor is disconnected from the load.	Axis fault
	E19.12	The auto-tuning times out.	The motor is not connected or output phase loss occurs. Ensure that the motor is connected properly or the motor is disconnected from the load.	Axis fault
	E19.13			Axis fault
	E19.14			Axis fault
	E19.15			Axis fault
	E19.16			Axis fault
	E19.17			Axis fault
	E19.19			Axis fault
	E19.20	Auto-tuning on the zero position angle of the no-load synchronous motor times out.	Check the Z feedback signal.	Axis fault
	E19.22			Axis fault
	E19.23	Auto-tuning on the pole position of the synchronous motor fails.	Ensure that the rated motor current (F1-03) is set according to the motor nameplate. Decrease the initial position angle detection current (F2-29).	Axis fault
	E19.24	Auto-tuning on the transient leakage inductance of the asynchronous motor fails.	The AC drive power rating is too low. Select an AC drive of proper power rating according to the motor power.	Axis fault
EEPROM read-write fault	E21.01	EEPROM read-write is abnormal.	For parameters written to EEPROM through communication, check the RAM addresses of the parameters. For the RAM address	Axis fault
	E21.02			Axis fault
	E21.03			Axis fault
	E21.04			Axis fault

Fault Name	Panel Display	Possible Cause	Solution	Fault Type
			mapping of parameters, see "Parameter Address Rules". If the EEPROM chip is damaged, contact the manufacturer to replace the main control board.	
Motor auto-tuning error	E22.00	The stator resistance obtained through auto-tuning exceeds the allowed range.	Check whether the rated motor voltage and current are correctly set, and set F1-02 (Rated motor voltage) and F1-03 (Rated motor current) according to the motor nameplate. Perform auto-tuning after the motor stops.	Axis fault
	E22.01	The rotor resistance of the asynchronous motor obtained through auto-tuning exceeds the allowed range.		Axis fault
	E22.02	The no-load current and mutual inductance of the asynchronous motor obtained through auto-tuning exceed the allowed range. If such an alarm is generated, the AC drive calculates no-load current and mutual inductance based on known parameters, which may be different from the optimal values.	Set motor parameters in group F1 according to the motor nameplate. Before auto-tuning, ensure that the motor has no load.	Axis fault
	E22.03	The back EMF of the synchronous motor obtained through auto-tuning exceeds the allowed range.	Ensure that the rated motor voltage (F1-02) is set according to the motor nameplate. Before auto-tuning, ensure that the motor has no load.	Axis fault
Short circuit to ground	E23.00	The motor is short circuited to the ground.	Check the motor cables and motor for short circuit to ground.	Axis fault
	E23.01	A hardware overcurrent fault occurs during short-to-ground detection upon power-on.		
	E23.02	A hardware overvoltage fault occurs during short-to-ground detection upon power-on.		
	E23.03	A great risk is detected during short-to-ground		

Fault Name	Panel Display	Possible Cause	Solution	Fault Type
		detection upon power-on.		
	E23.04	A lower bridge overcurrent fault occurs during short-to-ground detection before startup.		
	E23.05	A bus overcurrent fault occurs during short-to-ground detection before startup.		
	E23.06	A lower bridge and bus overcurrent fault occurs during short-to-ground detection before startup.		
Power supply unit fault	E25.00	The power supply unit is faulty.	Eliminate the power supply unit faults, such as input phase loss and overtemperature. Check the terminal configuration of the power supply unit. If any one of the following functions is selected, a fault is reported when there is no feedback signal: 1: Running enable 2: Incoming circuit breaker feedback 3: Auxiliary circuit breaker feedback 4: Residual current device feedback If any one of the following functions is selected, a fault is reported when the terminal is active: 6: Operation prohibition for drive unit 7: Coast-to-stop for drive unit 8: Stop-according-to-preset-mode for drive unit	Axis fault
Accumulative running duration reach	E26.00	The accumulative running duration reaches the setpoint.	Clear the record through parameter initialization.	Axis fault
User-defined fault 1	E27.00	The signal of user-defined fault 1 is input through the multi-functional DI terminal. The signal of user-defined fault 1 is input through virtual I/O.	Reset.	Axis fault
User-defined fault 2	E28.00	The signal of user-defined fault 2 is input through the multi-functional DI terminal.	Reset.	Axis fault

Fault Name	Panel Display	Possible Cause	Solution	Fault Type
		The signal of user-defined fault 2 is input through virtual I/O.		
Accumulative power-on duration reach	E29.00	The accumulative power-on duration reaches the setpoint.	Clear the record through parameter initialization.	Axis fault
Load loss	E30.00	The running current of the AC drive is lower than that set by F9-68.	Check whether the load is disconnected or the setting of F9-68 and F9-69 satisfies actual running conditions.	Axis fault
PID feedback loss during running	E31.00	The PID feedback is smaller than that set by FA-26.	Check the PID feedback signal or set FA-26 properly.	Axis fault
Local parameter backup failure	E32.00	An exception occurs during local parameter backup.	Check whether the backed-up drive unit station number exceeds the quantity of drive units installed.	Power supply unit fault
Torque limiting timeout	E36.00	The motoring torque upper limit defined by F2-10 is improper or the load is too heavy.	Set the motoring torque upper limit properly based on the working conditions, or reduce the load and use an AC drive with higher power.	Axis fault
Frequency direction fault	E37.00	The load is too heavy.	Set the frequency exception detection cycle (B7-21) properly based on the working conditions, or reduce the load and use an AC drive with higher power.	Axis fault
Frequency following error	E38.00	The load is too heavy.	Set the frequency following detection parameters (B7-22 and B7-23) properly based on the working conditions, or reduce the load and use an AC drive with higher power.	Axis fault
Excessive speed deviation	E42.00	Motor auto-tuning is not performed.	Perform motor auto-tuning.	Axis fault
		Parameters related to detection of excessive speed deviation (F9-73 and F9-74) are set incorrectly.	Set the related parameters (F9-73 and F9-74) correctly based on actual conditions.	Axis fault
Motor overtemperature	E45.00	The temperature sensor is connected loosely.	Check the temperature sensor connection. Re-connect the temperature sensor if necessary.	Axis fault
		The motor temperature is too high.	Increase the carrier frequency or take other heat dissipation measures to cool the motor.	Axis fault
		The motor overtemperature protection thresholds (F9-57, F9-59, and F9-61) are too low.	Increase the motor overtemperature protection thresholds (90°C to 100°C for common motors).	Axis fault

Fault Name	Panel Display	Possible Cause	Solution	Fault Type
STO fault	STO	STO1 and STO2 signals are disconnected simultaneously.	Check the wiring of STO1 and STO2.	Axis fault
	E47.02	STO1 and STO2 signals are disconnected separately.	Check the wiring of STO1 and STO2.	Axis fault
	E47.03	Undervoltage or overvoltage occurs on the STO circuit.	Contact the technical support personnel.	Axis fault
	E47.04	The STO circuit input subsystem is abnormal.	Contact the technical support personnel.	Axis fault
	E47.05	The STO blocking output chip is abnormal.	Contact the technical support personnel.	Axis fault
Braking unit fault	E61.01	The braking transistor is short-circuited at stop.	Check whether the resistance and power of the braking resistor are too low. Check whether the braking resistor is short-circuited.	Power supply unit fault
	E61.02	Braking transistor open circuit occurs.	Contact the technical support personnel.	Power supply unit fault
	E61.03	The braking transistor is short-circuited during running.	Check whether the resistance and power of the braking resistor are too low. Check whether the braking resistor is short-circuited.	Power supply unit fault
Fan fault	E80.00	The fan is faulty.	Ensure that the fan on the drive unit is connected properly. Ensure that the fan rotates freely.	Axis fault
Braking feedback fault	E90.00	The braking feedback signal is abnormal.	Ensure that the brake release signal of the AC drive is correctly transmitted to the brake device. Manually release the brake to confirm that the feedback signal is correctly transmitted to the AC drive. Replace the brake device.	Axis fault
	E90.01			
	E90.02			
Brake release timeout	E91.00	The running frequency does not reach the setpoint of B7-01 or B7-02.	Ensure that the motoring torque upper limit defined by F2-10 is greater than the setpoints of B7-03 and B7-04. Increase the brake release timeout detection time defined by B7-18.	Axis fault
	E91.01	The output torque or output current does not reach the setpoint of B7-03 or B7-04.		
	E91.02	The running frequency does not reach the setpoint of B7-01 or B7-02, and the output torque or output		

Fault Name	Panel Display	Possible Cause	Solution	Fault Type
		current does not reach the setpoint of B7-03 or B7-04.		
Command direction conflict	E93.00	Both the forward and reverse running commands of the DI terminal are active at the same time.	Ensure that only one of the forward and reverse running commands of the DI terminal is active.	Axis fault
Internal communication error	A98.01	The power supply unit detects that the consecutive frame loss of the drive unit exceeds the value of A0-01.	Check that the base terminals of the power supply unit and drive unit are properly connected, and eliminate the interference if any.	Power supply unit fault
	A98.02	The power supply unit detects that the consecutive frame loss of the I/O extension card exceeds the value of A0-02.	Check that the power supply unit and the extension card are properly connected, and eliminate the interference if any.	Power supply unit fault
	A98.03	The power supply unit detects that the consecutive frame loss of both the I/O extension card and the drive unit exceed the setpoints.	Check the wiring and eliminate the interference if any.	Power supply unit fault
Hardware I/O resource loss	A99.01	The selected DI hardware resource does not exist.	Ensure that the power supply unit and extension cards are firmly installed. Check parameters F4-00 to F4-15 of the drive unit to ensure that no non-existing DI hardware resource is selected.	Axis fault
	A99.02	The selected DO/RO hardware resource does not exist.	Ensure that the power supply unit and extension cards are firmly installed. Check the DO/RO hardware resources of the drive unit to ensure that no non-existing DO/RO hardware resource is selected.	Axis fault
	A99.03	The selected AI hardware resource does not exist.	Ensure that the power supply unit and extension cards are firmly installed. Check parameters F4-25 to F4-29 of the drive unit to ensure that no non-existing AI hardware resource is selected.	Axis fault
	A99.04	The selected DI and DO/RO hardware resources do not exist.	Ensure that the power supply unit and extension cards are firmly installed. Check the drive unit according to the solutions to A99.01 and A99.02.	Axis fault

Fault Name	Panel Display	Possible Cause	Solution	Fault Type
	A99.05	The selected DI and AI hardware resources do not exist.	Ensure that the power supply unit and extension cards are firmly installed. Check the drive unit according to the solutions to A99.01 and A99.03.	Axis fault
	A99.06	The selected DO/RO and AI hardware resources do not exist.	Ensure that the power supply unit and extension cards are firmly installed. Check the drive unit according to the solutions to A99.01 and A99.03.	Axis fault
	A99.07	The selected DI, DO/RO, and AI hardware resources do not exist.	Ensure that the power supply unit and extension cards are firmly installed. Check the drive unit according to the solutions to A99.01, A99.02, and A99.03.	Axis fault

Appendix Electrical Wiring Diagram

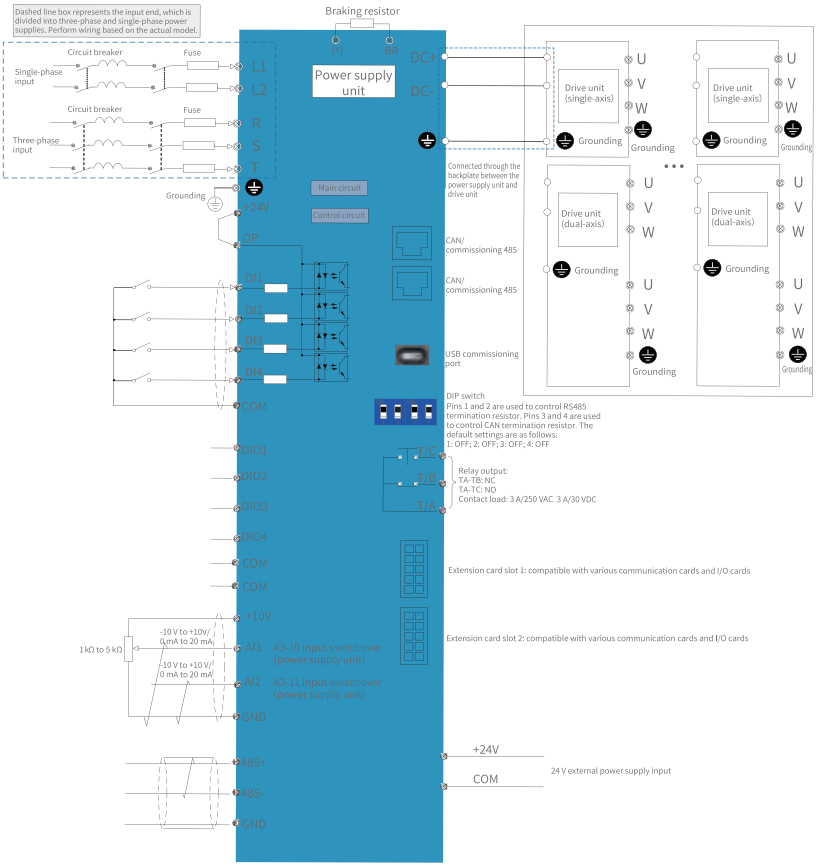

Figure -5 Electrical wiring diagram

19011494A04

Copyright © Shenzhen Inovance Technology Co., Ltd.

Shenzhen Inovance Technology Co., Ltd.

www.inovance.com

Add.: Inovance Headquarters Tower, High-tech Industrial Park, Guanlan Street, Longhua New District, Shenzhen

Tel: (0755) 2979 9595 Fax: (0755) 2961 9897

Suzhou Inovance Technology Co., Ltd.

www.inovance.com

Add.: No. 16 Youxiang Road, Yuexi Town, Wuzhong District, Suzhou 215104, P.R. China

Tel: (0512) 6637 6666 Fax: (0512) 6285 6720