INOVANCE

FORWARD, ALWAYS PROGRESSING

Robot System

Safety User Guide

Industrial Automation | Intelligent Elevator | New Energy Vehicle | Industrial Robot | Rail Transit

Data code PS00012378A01

Preface

Introduction

To ensure the operator and equipment safety, you need to perform operations in accordance with the safety requirements stipulated in the standards and regulations of the country/region where the robot is located. Before operating the robot, you need to get sufficiently familiar with the operation and handling information of industrial robots mentioned in this manual.

The information does not include how to design, install, and operate a complete robot system.

Any safety information mentioned in this manual should not be regarded as a guarantee by Inovance that "Following all safety instructions can prevent any industrial robot damage or injury."

Intended Audience

- Mechanical engineers
- Electrical engineers
- System engineers

Relevant Models

This safety manual applies to all models of Inovance robots.

More Documents

Name	Data Code	Description
IR-S20&GS20 Series SCARA Robot User Guide - Mechanical	PS00011394	Describes basic specifications, installation, and maintenance of the product.
IR-R20 Series 6-Axis Robot User Guide - Mechanical	PS00017802	Describes the specifications, installation, wiring, and maintenance of the product.
IR-R50&60&80 Series 6-Axis Robot User Guide	PS00005549	Describes the basic specifications, installation, wiring, motion range, and maintenance of the product.
IRTP80 Series Teach Pendant User Guide	19012261	Describes the product information, wiring, and operation of the IRTP80 series teach pendant.
IRCB101 Series High-Protection Robot Control Cabinet User Guide	PS00015414	Describes the basic specifications, installation and wiring, common fault diagnosis and troubleshooting, and maintenance of the IRCB101 series high-protection control cabinets.
Robot System Safety User Guide (this manual)	PS00012378	Describes robot system safety information.

Revision History

Date	Version	Description
October 2024	A01	• *" Safety Standards" on page 1*Added the instruction reference list. • *"2.1 Concept Description" on page 11*Added the concept description section. • *"3.3 Rescuing Personnel Trapped by Robot Arms" on page 18*Added the SCARA robot handling section. • *"6.1 Storage" on page 32*Added the storage section. • *"6.3 Handling" on page 32*Added the handling section. • *"6.6 Operating Mode" on page 39*Modified the operating mode table.
July 2023	A00	First release

Access to the Guide

This guide is not delivered with the product. The version may be updated without further notice. You can obtain the PDF version in the following ways:

- **Inovance website:** Visit *www.inovance.com*, go to "Support" > "Download", search by keyword, and then download the PDF file.
- **QR code**: Scan the QR code on the product with your smart phone.
- **My Inovance app:** Scan the QR code below to install the My Inovance app, and search for the file in the app.

Warranty

For faults and damage incurred during normal use in the warranty period, Inovance provides free repair service. (For details of the warranty period, see the purchase order.) A maintenance fee will be charged out of the warranty period.

Even in the warranty period, a maintenance fee will be charged for repair of the following damage:

- Damage caused by operations not following the instructions in the guide
- Damage caused by fire, flood, or abnormal voltage
- Damage caused by unintended use of the product

- Damage caused by use beyond the specified scope of application of the product
- Damage or secondary damage caused by force majeure (such as natural disaster, earthquake, and lightning strike)

The maintenance fee will be charged according to our latest Price List if not otherwise agreed upon.

For details, see the Product Warranty Card.

Safety Standards

Safety standards

EU Directive	Reference Standards
Machinery Directive 2006/42/EC (functional safety)	ISO 10218-1:2011 ISO 13849-1: 2023 ISO 13849-2: 2012 EN ISO 10218-1:2011 EN ISO 13849-1: 2023 EN ISO 13849-2: 2012
EMC Directive	IEC 61800-5-2:2016 IEC 61800-3:2017 IEC 61000-6-4/A1:2010 EN 61000-6-4/A1:2011 EN 61800-5-2: 2017 EN 61800-3: 2018

Robot Product Standards	
IEC 60204-1 EN 60204-1 GB5226.1	Safety of machinery - Electrical equipment of machines - Part 1: General requirements
ISO 10218-1 EN ISO 10218-1 GB11291.1	Robots and robotic devices - Safety requirements for industrial robots - Part 1: Robots
ISO 12100 EN ISO 12100 GB/T 15706	Safety of machinery - General principles for design - Risk assessment and risk reduction
IEC 61000-6-2 EN 61000-6-2 GB/T 17799.2	Electromagnetic compatibility (EMC) - Part 6-2: Generic standards - Immunity for industrial environments
IEC 61000-6-4 EN 61000-6-4 GB 17799.4	Electromagnetic compatibility (EMC) - Part 6-4: Generic standards - Emission standard for industrial environments

Table of Contents

Preface 1
Safety Standards 1
1 Safety Instructions 4
1.1 Safety Precautions 4
1.2 User Definition 9
1.3 Liability Statement 10
2 Emergency Safety Information 11
2.1 Concept Description 11
2.2 Emergency Stop and Stop 12
2.3 Emergency Stop Methods 14
2.4 Restoring from Emergency Stop 17
3 Safety Instructions for Human 18
3.1 Possible Fetal Result of Robot Movement 18
3.2 Possible Personnel Injury or Damage in Initial Trial Run 18
3.3 Rescuing Personnel Trapped by Robot Arms 18
3.4 Burns Caused by Hot Parts 21
3.5 Safety Risks When Lubricating Grease Is Applied 22
3.6 Fire Extinguishment 22
4 Robot System Composition 24
5 Safety Devices 25
5.1 Safety Enable Switch 25
5.2 Safety Fence 25
5.3 Safety Door 26
5.4 Lockout 27
5.5 Tagout 29
5.6 Live Part Risks 29
5.7 Brake Release Switch 30
6 Operation Procedure Precautions 32
6.1 Storage 32
6.2 Unpacking 32
6.3 Handling 32
6.4 Installation 36
6.5 Wiring 37

6.6 Operating Mode 39
6.7 Operation. 41
6.7.1 Safety Requirements Before Operation 41
6.7.2 Programming and Teaching 41
6.7.3 Automatic Operation. 42
6.8 Troubleshooting 42
6.9 Maintenance 43
6.10 Backup 44

1 Safety Instructions

1.1 Safety Precautions

Safety Disclaimer

Read and comply with the safety precautions during installation, operation, and maintenance of the equipment.

- To ensure personal and equipment safety, follow all safety precautions marked on the product and described in the user guide when installing, operating, and maintaining this product.
- "CAUTION", "WARNING", and "DANGER" messages in the guide are only examples and do not cover all safety precautions.
- Use this product in an environment that complies with the design specifications. Malfunctions or component damage caused by improper use is not covered by warranty.
- Inovance shall not be liable for any physical injuries or property loss caused by improper use.

Safety Categories and Definitions

DANGER indicates that failure to comply with the notice will result in severe physical injuries or even death.

WARNING indicates that failure to comply with the notice may result in severe physical injuries or even death.

CAUTION indicates that failure to comply with the notice may result in minor or moderate physical injuries or equipment damage.

Warning Label

For safe operation and maintenance, follow the instructions on safety labels on the equipment. Do not stain or remove the safety labels. The following table describes the safety labels.

Safety Label	Name	Description	Remarks
Control cabinet			
	High touch current warning Cover removal warning	• Ground the control cabinet before connecting it to a power supply. In case of a high leakage current, touching energized parts may result in an electric shock. • Do not remove the cover since there are no user-serviceable parts inside. Ask qualified maintenance personnel for maintenance.	-
	Electric shock Internal capacitor discharge warning	• Do not open the cover or door within 10 minutes after cutting off the power supply. Failure to comply may result in an electric shock due to residual voltage. • Do not touch the energized parts during power-on. Failure to comply may result in an electric shock.	-
	Burn warning	Prevent burns when touching machine parts.	It is applicable when the enclosure temperature is too high.
	Referring to user guide	Before operating the equipment, refer to the installation instructions and user manual for installation, operation, and maintenance instructions.	-
	Power-on/ power-off warning	Do not touch the terminals or remove the cover while power is on or within 10 min after power-off. Failure to comply may result in an electric shock.	-
Robot body			
	Dangerous rotating parts warning	Keep away from dangerous moving parts.	-
	Electric shock	Do not touch the energized parts during power-on. Failure to comply may result in an electric shock.	-

Safety Label	Name	Description	Remarks
	Collision warning	Never enter the robot motion range during robot running. Otherwise, you may bump into the robot, and severe safety issues may occur.	-
	Brake release warning	Be careful of the robot arm falling due to its weight when releasing the brake. This warning label is affixed to the robot and optional brake release box.	-
	Stepping warning	Do not step on the robot joint motor.	It is applicable when the upper arm can be stepped on (available for all models).
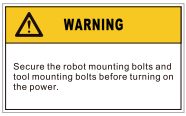	Mounting bolt fastening warning	Secure the robot mounting bolts and tool mounting bolts before turning on the power.	-
  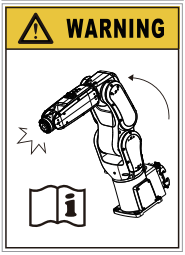	Tipping warning	Fasten the robot first before removing the fastening screws of the base to prevent the robot from tilting forward due to its center of gravity, which may cause equipment damage or personal injury.	-
	Falling warning	Secure the J2 and J3 gravity bearing axes with a sling before releasing the brake to prevent robot body falling. Failure to comply may cause object damage or personnel injury.	It is applicable when the robot arm is too heavy.

Safety Label	Name	Description	Remarks
	Pre-operation warning	Before starting to operate the robot, read and comply with the robot safety instructions to ensure the personnel and robot safety.	-
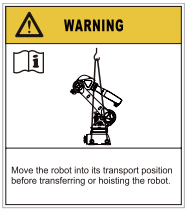	Lifting warning	Allow only qualified personnel to carry out transportation including rigger operation, hoisting by crane, and forklift driving. Failure to comply may result in serious injury or significant damage.	It is applicable for handling by lifting.
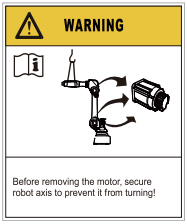	Motor mainte nance warning	When you disassemble the joint motor, the joint may rotate or fall due to gravity, causing injury to personnel or damage to the machine. Before disassembly, fix the robot joint needs to prevent it from rotating or falling.	It is applicable for the upper arm with a risk of falling and causing injury.
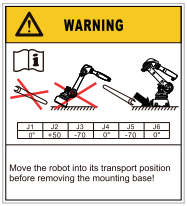	Joint adjustment warning	Set the robot to its transport position before removing the mounting base.	The motion range on the label is based on the data of the specific model.
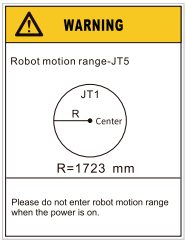	Motion range warning	When the robot is powered on, it is prohibited to enter its working radius area to prevent personal injury.	The motion radius on the label is based on the data of the specific model.
Optional Warning Labels			

Safety Label	Name	Description	Remarks
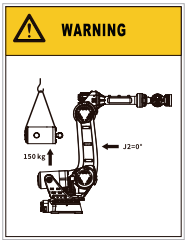	Warning of balance cylinder disassembly by lifting	When disassembling the balance cylinder by lifting, adjust J2 to the zero position.	-
	Warning of disassem bling balance cylinder front cover	Disassembly of the balance cylinder front cover is not allowed.	-
	Stepping warning	Do not step on the high-load robot joint motor.	It is applicable when the upper arm can be stepped on (high-load robot body, such as R220).

Safety Label	Name	Description	Remarks
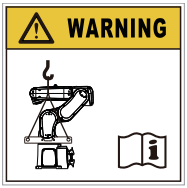	Lifting warning	Allow only qualified personnel to carry out transportation including rigger operation, hoisting by crane, and forklift driving. Failure to comply may result in serious injury or significant damage.	It is applicable when there are user mounting screws on the side of the turntable, such as the IR-R11 series.
	Lifting warning	Allow only qualified personnel to carry out transportation including rigger operation, hoisting by crane, and forklift driving. Failure to comply may result in serious injury or significant damage.	It is applicable when there are no user mounting screws for the turntable, such as the IRS311-7 and IR-R7H series.

1.2 User Definition

Personnel Classification	Responsibilities	Remarks
Operators	• Carry out daily OFF/ON operations of the robot system. • Carry out emergency stop in case of emergency. • Monitor the normal operation of the robot program.	Working within the safety fence is not allowed.
Programmer	• Carry out normal operations of the robot. • Carry out programming and debugging of the robot program. • Carry out teaching operations of the robot.	Working within the safety fence is allowed.
Maintenance personnel	• Carry out normal operations of the robot. • Maintain the robot.	Working within the safety fence is allowed.

Programmers and maintenance personnel must receive training on the following projects related to operations and maintenance:

- Basic knowledge of robots
- Composition and functions of robots
- Connectors between robots and surrounding devices
- Technical safety regulations of robots
- Disassembly and assembly of robots
- Manual and automatic operating modes of robots
- Creation, teaching, and reproduction of programs
- Automatic operation of programs
- Zero point calibration
- Setting of coordinate systems
- Handling of common problems
- Regular inspections and replacements
- File backup

1.3 Liability Statement

All operators must receive safety training and comply with technical safety regulations before operating robots. Violation of these rules may lead to personal injury and damage to industrial robots and other equipment.

Any safety information mentioned in this manual should not be regarded as a guarantee by Inovance that "Following all safety instructions can prevent any industrial robot damage or injury."

2 Emergency Safety Information

2.1 Concept Description

Emergency stop

Overriding control of any other manipulators, emergency stop can disconnect the drive power and manipulator motor, stop all moving parts, and disconnect the power supply from any potentially dangerous functions controlled by the manipulator system.

The emergency stop state means that all power supplies are disconnected from the manipulator, excluding the manual brake release circuit. A recovery step must be performed. That is, reset the emergency stop button and press the motor start button to return to the normal operation.

The manipulator system is configurable. Therefore, emergency stop may lead to the following results:

- Uncontrolled stop: The motor power supply is disconnected to quickly stop the manipulator operation.
- Controlled stop: A power supply is provided for the motor to maintain the manipulator route, stopping the manipulator operation. After the operation is completed, the power supply is disconnected.

By default, uncontrolled stop is selected. However, controlled stop can minimize unnecessary wear on the manipulator and the operations required to return the manipulator system to the production state. Therefore, it should be considered first. For the configuration method of the manipulator system, see the factory or workshop documentation.

Safety stop

Safety stop means only the power supply to the manipulator motor is disconnected so no recovery steps are needed. Reconnecting the power supply for the motor can recover from the safety stop state to the normal operation. Therefore, safety stop is also called protective stop. The manipulator system is configurable. Therefore, safety stop may lead to the following results:

- Uncontrolled stop: The motor power supply is disconnected to quickly stop the manipulator operation.
- Controlled stop: A power supply is provided for the motor to maintain the manipulator route, stopping the manipulator operation. After the operation is completed, the power supply is disconnected.

By default, controlled stop is selected.

Controlled stop can minimize unnecessary wear on the robot and the operations required to return the robot to production state. Therefore, it should be considered first. For the configuration method of the robot system, see the factory or workshop documentation.

Safety stop applies to safety protection, which is detailed as follows.

Safety protection

Safety protection means that protective devices are used to keep operators away from some dangers that cannot be reasonably eliminated or completely excluded by design in actual operations.

When certain safety protection mechanisms (such as light curtains) are activated, protective devices can prevent danger by stopping the manipulator in a controlled manner. You can connect protective devices to any safety stop input on the manipulator controller for safety protection.

2.2 Emergency Stop and Stop

Emergency stop

When someone in the robot's work area is in danger or when the robot is damaging a device, immediately press any emergency stop button.

When the emergency stop button is pressed, the motor power is cut off, and the braking system makes the robot stop moving in the shortest distance.

In case of emergency, use the emergency stop button.	In case of non-emergency, do not use the emergency stop button.
In case of the following abnormalities or sudden emergencies during operation of the robot, immediately press the emergency stop button: • There are workers in the working scope during operation of the robot. • The robot injures workers or damages devices.	When the robot is moving properly, do not use the emergency stop button in case of non-emergency. • Frequent braking will shorten the lifetime of the motor brake release switch. • If you press the emergency stop button during high-speed heavy-load operation of the robot, the robot's accuracy may exceed the index range and even damage the robot in severe cases. • If the normal operation trajectory of the robot is destroyed, the action may be executed incorrectly. In severe cases, it may hit nearby objects and cause dangerous accidents.

Teach pendant emergency stop button

Figure 2-1 Teach pendant emergency stop button

Control cabinet emergency stop button

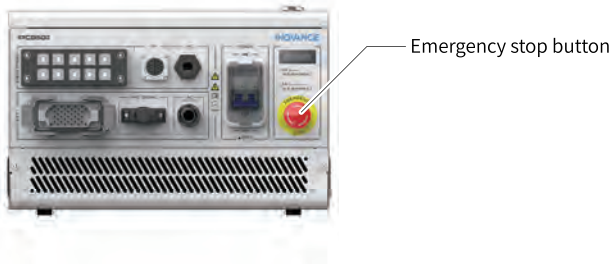

Figure 2-2 IRCB500 high-protection control cabinet emergency stop button

Figure 2-3 IRCB101 high-protection control cabinet emergency stop button

Other emergency stop buttons

Users can externally connect emergency stop buttons at appropriate locations outside the controller. For the emergency stop button layout, see instructions related to user operational space in the relevant standard.

Note

One or more emergency stop buttons can be set according to the workshop design.

Stop

In case of a non-emergency stop, press the stop button on the teach pendant. At this time, the motor power will not be cut off, the brake release switch remains in the released state, and it does not affect the service life of the brake release switch.

Stop button of the handheld teach pendant

Stop button of the PC-based teach pendant

2.3 Emergency Stop Methods

Emergency stop is implemented in accordance with the standards GB 11921.1/ISO 10218-1 and IEC 60204-1. Emergency stop is the highest level of stop method. It cuts off the power

source of the motor and provides the fastest deceleration method, preventing other hazards to the greatest extent. Emergency stop is effective in any operating mode.

Emergency stop modes

- Category 0 stop
  An uncontrolled stop mode, corresponding to Category 0 stop according to IEC 60204-1:2005. The drive stops output and dynamic braking is applied. When the speed decreases, the brake release switch is closed.
- Category 1 stop
  A controlled stop mode, corresponding to Category 1 stop according to IEC 60204-1:2005. The stop is planned by the controller. When the planning is complete, the drive is disabled and the brake release switch is closed.

Emergency stop trigger modes

- Mode 1: emergency stop button of the handheld teach pendant
- Mode 2: emergency stop button of the PC-based teach pendant or the PC programming platform
- Mode 3: external wiring (such as the SAFETY terminal and safety door)

The emergency stop method can be configured according to the model of the control cabinet. The default emergency stop mode is category 1 stop only for the emergency stop button of the PC-based teach pendant, and category 0 stop for other emergency stop functions.

When the emergency stop mode is configured as a category 0 stop, the emergency stop is an uncontrolled stop, and a corresponding stop distance needs to be reserved in the robot's working space.

Caution

- Emergency stop trigger mode 2 is implemented by network communication. In actual applications, emergency stop may be triggered by poor communication, increasing the response time. It is recommended to use mode 1 or mode 3.
- Emergency stop is used only for emergencies and cannot replace normal program stop. Frequently stopping a robot in motion by using the emergency stop button can cause robot failure and reduce its service life.
- During system troubleshooting, maintenance, or fixture installation, an emergency stop cannot replace power-off of the control cabinet. External misoperation may pose a risk of emergency stop recovery, which can power on the motor, leading to safety accidents.
- The stop distance and stop time of category 1 stop are longer than those of category 0 stop. When using category 1 stop, consider the factors that cause stop distance and stop time extension, and carry out a full risk assessment of the entire system.

Inertia movement distance upon emergency stop

When the control system enters a robot emergency stop, the robot does not stop immediately due to kinetic energy. There is a stop time and stop distance after emergency stop is activated. The stop time (inertia movement time) and stop distance (inertia movement angle) of emergency stop vary with stop modes.

The stop time and stop distance are determined by the stop mode and stop parameters of different models. For detailed parameters, see the user guide.

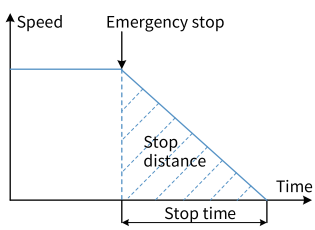

Category 0 stop process

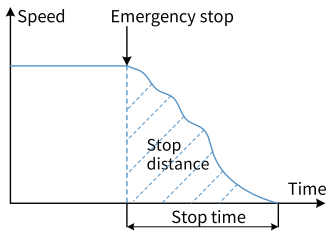

Category 1 stop process

Release of emergency stop

Operators need to manually restore the emergency stop state based on the safety standard.

The normal stop procedure is as follows:

1. Check whether the robot system and peripheral devices allow restoration of the emergency stop state.

2. If the emergency stop state can be restored, it can be released in the following ways:
   - Release the emergency stop button of the handheld teach pendant to restore the emergency stop state.
   - Click the emergency stop icon of the PC-based teach pendant again.
   - Restore the level for external wiring.
   - Troubleshoot system faults to restore the system to a non-emergency stop state.
3. Check whether the controller restored to a non-emergency stop state is still in an alarm state. If yes, clear the alarm.

2.4 Restoring from Emergency Stop

After the fault is cleared, manually rotate the emergency stop button to release the emergency stop state. After turning on the motor power, starting the robot, and restoring from the fault state, the operator should hold the emergency stop switch so as to cut off the motor power immediately in the event of any abnormality.

3 Safety Instructions for Human

3.1 Possible Fetal Result of Robot Movement

Before running a robot, ensure that the emergency stop device is correctly installed and connected. Ensure that there is no personnel in the motion range of a robot before pressing the start button.

A robot with unexpected or non-standard movement may generate a great force, which may lead to serious injury to personnel or damage to the robot.

3.2 Possible Personnel Injury or Damage in Initial Trial Run

After installation or maintenance is completed, the following conditions must be met before initial trial run:

- Before power-on, ensure that the robot is correctly secured in place with screws.
- Install all safety devices to ensure proper functions.
- If maintenance or repair is completed, ensure that the maintained or repaired parts function properly.
- Keep a safe distance between all personnel and the robot, and ensure that no one is within the safety fence.

Warning

During automatic operation of the robot, personnel within the safety fence may be collided with by robot arms, causing serious injury or even death.

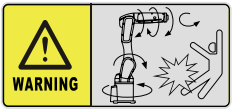

3.3 Rescuing Personnel Trapped by Robot Arms

In the event of an abnormal robot operation, such as a collision that causes a jam and injury to personnel, do not use the teach pendant to operate the robot to prevent secondary injury. Use the brake release switch to assist in relieving the jam or rescuing the injured personnel.

Ensure that the control cabinet is connected to a power supply. If the robot is not connected to the control cabinet, or the control cabinet is powered off, connect the robot base connector to an external power supply.

The position of the brake release switch unit may vary with robot models.

SCARA robot handling

Note

Some SCARA robots, such as the IR-S4 and IR-S7 series robots, only have the brake release switch for J3. For the brake release switch position of a specified model, see the user guide of the robot model.

Take the IR-S20&GS20 series SCARA robot as an example, as shown in the following figure.

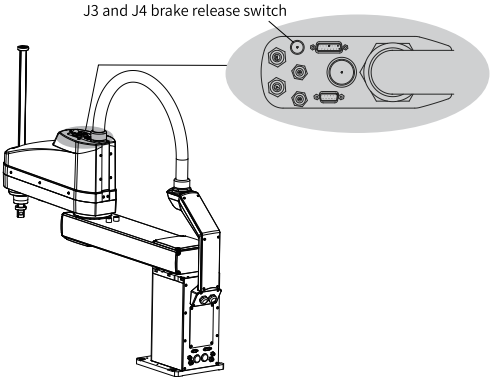

Figure 3-1 Brake release switch of the SCARA robot

Press the brake release switch and then rotate J3 and J4 (ball screws) up and down to be away from collision objects.

6-axis robot handling

Note

The hand-held brake release box is an option.

Take the IR-R60 series 6-axis robot as an example. The procedure for connecting and using the brake release switch is as follows.

1. Connect the cable of the brake release switch box to the brake release signal interface of the robot body, as shown in the figure below.

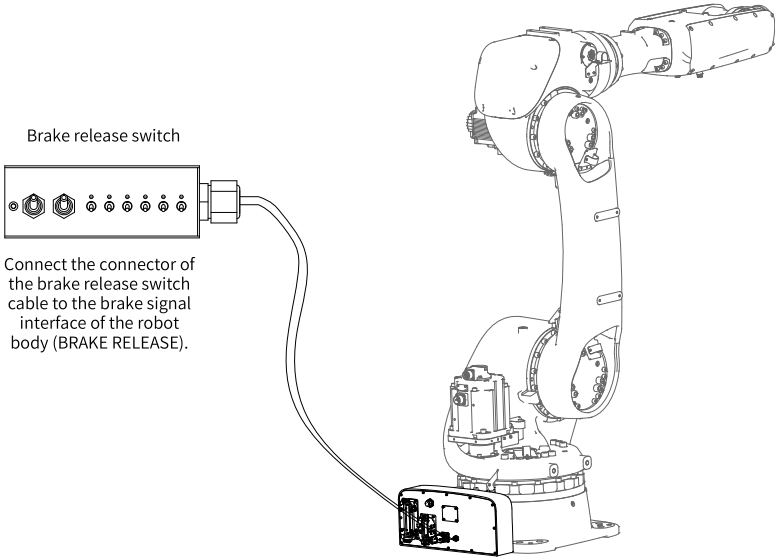

Figure 3-2 Connection of the brake release switch

2. Toggle the PWR switch to ON, turn the group switch to J1, J3, and J5 or J2, J4, and J6, then toggle the switch of the corresponding axis to ON, and keep pressing to release the brake of the corresponding axis.
3. Manually rotate the robot arm to move it away from he collision object.

Note

- When the group switch is turned to J1, J3, and J5, the corresponding J1, J3, and J5 single-axis switches must be turned to the ON position to open the corresponding axis brake. When the group switch is turned to J2, J4, and J6, the corresponding J2, J4, and J6 single-axis switches must be turned to the ON position to open the corresponding axis brake.
- For example, to release the brake of J1, first turn the PWR switch to the ON position, turn the group switch to J1, J3, and J5, then turn J1 to ON, and keep pressing to release the brake of J1.

Caution

- For system safety, perform brake release operation on a single axis.
- Before releasing the brake, ensure that the arm weight will not increase the pressure on trapped personnel. Otherwise, the risk of injury may be increased.
- When releasing the brake, note that the robot arm may fall due to gravity, resulting in injury, pinching, or equipment damage or malfunction.
- After the brake release is completed, be sure to disconnect the brake release box to avoid accidental operation that may result in injury to personnel.
- For the release of the brake for any robot arm with a weight greater than 20 kg, two people are required for the operation.

The J2 and J3 axes are gravity bearing axes. Secure them with a sling before releasing the brake to prevent falling and injury, as shown in the figure below.

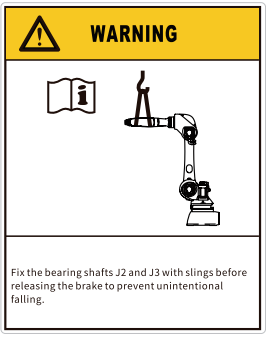

4. After the brake release operation is completed, disconnect the brake release switch box.

3.4 Burns Caused by Hot Parts

When a robot is running, many parts heat up. Touching these parts may cause burns. Before touching, feel for potentially hot parts at a certain distance with your hand, or wear heat-resistant gloves.

To disassemble a part that potentially heats up, wait for it to cool down or take other measures.

Caution

Never place paper, plastic, or any other materials on hot metal surfaces. Placing flammable materials on hot surfaces may cause a fire.

3.5 Safety Risks When Lubricating Grease Is Applied

Before replacing the lubricating grease for the reducer or ball screws, focus on the following safety information:

- Replacing grease by non-professional personnel is not allowed. If maintenance is needed, contact Inovance after-sales maintenance personnel.
- Before handling corrosive media, take appropriate skin protection measures. Wear goggles and gloves.
- Handling lubricating greases may lead to injury to personnel and damage to the product. If the lubricant gets into your eyes, mouth, or on your skin, follow the instructions below:
  - If the lubricant gets into your eyes, flush them thoroughly with clean water, and then see a doctor immediately.
  - If the lubricant gets into your mouth, wash out your mouth with water thoroughly, If swallowed, see a doctor immediately.
  - If the lubricant gets on your skin, wash the area thoroughly with soap and water.

3.6 Fire Extinguishment

Caution

In case of a fire, ensure that all personnel are safely evacuated before attempting to extinguish the fire. Injured personnel should be treated first.

In case of fire in an electrical device (such as a robot or controller), use a carbon dioxide extinguisher. Do not use water or foam.

4 Robot System Composition

A robot system consists of the following devices:

- Robot body
- Robot control cabinet
- Robot teach pendant
- Safety fence
- End effector
- Other safety devices
- Other peripheral equipment
- Workpiece

Inovance ensures the safety of the robot body, control cabinet, and teach pendant, while the customer should prepare a system profile for the safety of other parts.

5 Safety Devices

5.1 Safety Enable Switch

There is a safety enable switch on the back of the teach pendant. When operating the teach pendant, press switch for the robot to respond. If you release or tightly grip the switch, the robot will stop.

5.2 Safety Fence

Operations within the safety fence include handling, wiring, programming teaching, and maintenance. Personnel to perform operations within the safety fence must receive professional training on robots.

The safety fence must comply with the following items:

- Ensure that the safety fence can withstand predicted forces from machine operations and the surrounding environment.
- Ensure that the safety fence has no sharp angles or protrusions and is not a dangerous object.
- Ensure that the safety fence is always in a fixed state and cannot be disassembled without tools.
- Set the safety fence at the maximum distance from the robot.
- To prevent electric shock, connect the safety fence to protective grounding.
- Enter the fence only after the robot completely stops.

Warning

Ensure that unrelated personnel do not unknowingly enter the safety fence during teaching or maintenance. Otherwise, they may be caught or collided with by the robot, causing serious injury or fatal accidents.

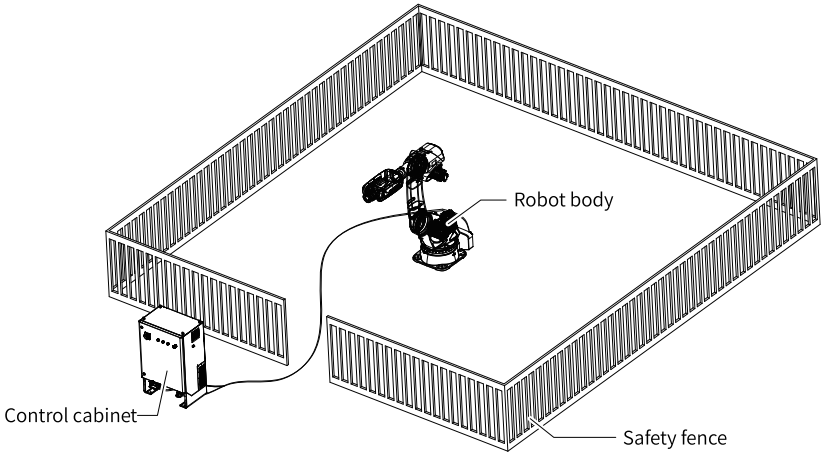

5.3 Safety Door

According to the GB 11291.1 and GB 5226.1 standards, a robot should have one or more protective stop circuits.

Safety door-based stop modes:

1. Category 0: Immediately cut off the drive source, which is an uncontrolled stop mode.
2. Category 1: Apply a braking force to stop and then cut off the drive source, which is a controlled stop mode.
3. Category 2: Apply a braking force to stop, monitor the static state after stop, and do not cut off the drive source, which is a controlled stop mode.

Safety door features:

1. To stop the robot by using the safety door, the category 0, category 1, or category 2 (with the function of monitoring the static state after stop) mode is available.
2. All dangerous movements are terminated.
3. Warnings are provided, which are kept effective.
4. The stop function can be started manually or by control logic.

Three stop modes are configurable for the controller. Currently, only the category 0 mode meets the functional safety requirements. For usage requirements, the category 1 and category 2 modes also can be used.

If the safety door-based stop mode is not configured to category 0, other category 0 stop interfaces need to be reserved.

5.4 Lockout

Lockout refers to the operation of preventing others from inadvertently turning on the robot system power when entering the safety fence for maintenance, repair, or other needs.

Before maintenance or repair, perform the following lockout steps.

Caution

- When the system is powered on, the cabinet door must be closed and the door lock switches must be locked with a key.
- To perform wiring, daily inspection, and maintenance, cut off the power supply on the I/O side, wait for 15 minutes, and open the control cabinet door for operations.

Opening the control cabinet door

Operate the door lock switch (① in the figure below) and molded case circuit breaker (② in the figure below) to open the cabinet door. The steps are as follows.

1. Use the key to open the door lock switches.
2. Turn the door lock switches clockwise (① in the figure below).
3. Turn the molded case circuit breaker (② in the figure below) to the OFF position, and open the cabinet door.
4. After completing operations, close the control cabinet door, and turn the molded case circuit breaker to the ON position.

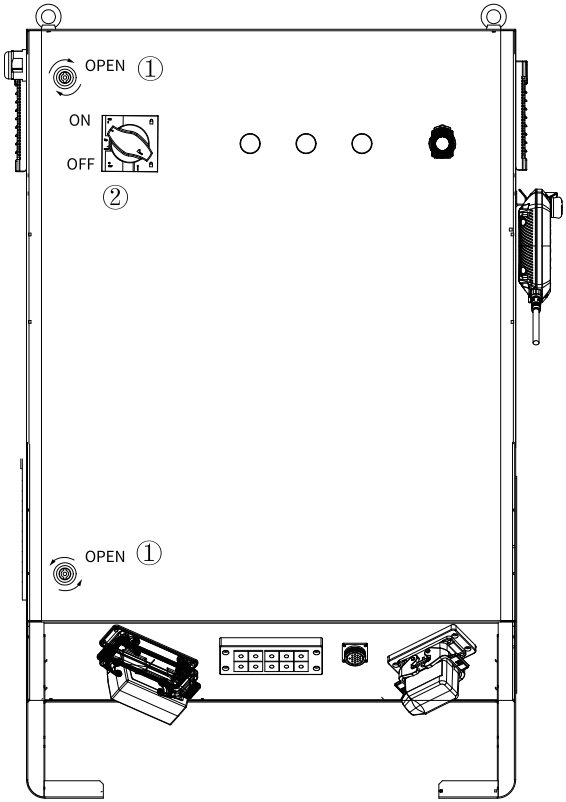

Powering off and locking out the molded case circuit breaker

During power-off maintenance of other equipment within the safety fence, it is essential to power off the control cabinet and ensure that it will not be inadvertently powered on during the work. For this, the molded case circuit breaker provides the power-off lockout protection function. The steps are as follows.

Power off the molded case circuit breaker, turn it to the OFF position, pull out the plastic part on the handle, and then lock the molded case circuit breaker.

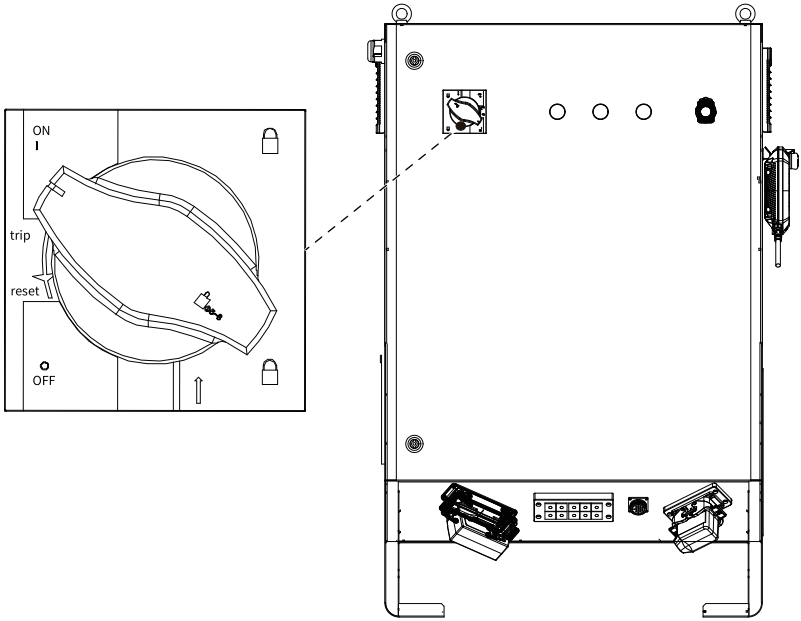

5.5 Tagout

Tagout refers to the operation of preventing others from inadvertently entering the safety fence or powering on the robot system during robot operation or maintenance and repair.

Place clear sign tags to prompt that installation, operation, shutdown, or maintenance and repair is in progress to prevent inadvertent power-on. Failure to comply may cause a dangerous accident.

5.6 Live Part Risks

High voltage risks

In the robot system, the following parts carry a high voltage:

- Robot control cabinet (power storage devices such as the transformer, servo drive, and ultra-capacitor)
- Devices powered by an external power supply, such as the I/O module

- Main power supply, main switch, and main power socket
- Motor and other additional live tools of the robot body
- Power line connecting the robot control cabinet and the robot body
- Power supply for other additional connection devices

After the robot is powered off, the robot control cabinet is still energized due to the residual voltage of the ultra-capacitor inside. Wait at least 10 minutes before further operations because residual voltage exists after power-off.

When the robot system is turned off, related tools or material devices may also pose a voltage danger.

Power cords in operation during the work process may be damaged, which can pose a risk of electrification.

ESD risk

Electrostatic discharge (ESD) is the static electricity conduction between two objects with different potentials. It can be conducted by direct contact or an induced electric field. When handling components or component containers, ungrounded personnel may conduct a large amount of static electricity. This discharge process may damage sensitive electronic devices.

Perform the following operations to eliminate the danger of static electricity:

- Wear wristbands. Check wristbands regularly to ensure correct use and no damage.
- Use an ESD grounding mat. Use a current limiting resistor to ground the mat.
- Use an anti-static table mat. Ground the mat and ensure that the mat can control electrostatic discharge.

5.7 Brake Release Switch

Brake precautions

No.	Description
1	If the brake may fail to work, use other methods to ensure the safety of the robot arm system before operation.
2	To disable the brake by connecting an external power supply, abide by the following requirements: • Never stand within the motion range of the robot when the brake is disabled (unless the arm system is supported in other ways). • Never stand under any robot axis under any circumstances.

Description of the brake release switch

- When the power is disconnected or the motor is not enabled during robot operation, the brake release switch is closed. Be aware of axis falling and hitting peripheral devices due to the weight of the end effector, to prevent dangerous accidents.

- When the brake release switch is released, the motor axis is affected by gravity and may be hit by moving arm parts and squeezed by parallel arms.
- During operation, the brake release switch of each axis motor will experience normal wear. Before operation, check whether the brake release switch can be properly used.
- To move a motor axis up or down when installing the end effector, power on the control cabinet and press the brake release switch.
- The brake release switch is a momentary switch. It releases the brake only while pressed.

6 Operation Procedure Precautions

6.1 Storage

No.	Precautions
1	Use and store robots under the ambient conditions specified in the user guide. This product is intended to be used indoors. If the robot system is not used or stored according to the environment requirements, the robot lifetime may be reduced, the robot may be damaged, and even safety accidents may be caused. ● The temperature of the work area ranges from 0°C to 45°C, with a maximum temperature variation of 1.5°C/min. ● The relative humidity of the environment ranges from 5% RH to 95% RH, without condensation. ● Keep away from direct sunlight and avoid places with salt or moisture and other rust-prone places. ● Avoid places with dust, oil fume, iron filings, or other dust pollution. Avoid places with flammable gas, explosive gas, and corrosive liquid and gas. ● Avoid places with great shock and vibration (vibration acceleration below 4.9 m/s^2) ● Keep away from sources of electrical interference.
2	Use the robot system within the range specified by the product specifications in the user guide. Never use the robot system with overlength, overlimit, overload, or overspeed. Failure to comply may reduce the robot lifetime, damage the robot, and even cause safety accidents.

6.2 Unpacking

No.	Precautions
1	Use a claw hammer for unpacking, which is more secure.
2	The steel tongue piece is quite sharp. Wear protective gloves to prevent scratches, and operate carefully to avoid damage to the machine. Take out the machine carefully to avoid bumping.
3	Only qualified personnel can unpack the robot. Failure to comply may result in serious injury or significant damage.
4	When removing the body fixing bolts, another person must hold the equipment during the whole process to prevent it from tilting over due to unbalanced center of gravity when the fixing base is removed, which may cause personal injury or equipment damage. Otherwise, the manipulator will tip over, which may trap your hands or feet.
5	Do not remove the cable ties fixing the robot arms before the setup is completed. Otherwise, your fingers may be caught by robot arms.

6.3 Handling

No.	Precautions
1	Transport the equipment with a crane or forklift with the original package.
2	Before using a crane or a forklift to handle a robot, clear all obstacles on the transportation route to ensure that the robot is safely transported to the designated installation position.

No.	Precautions
3	Allow only qualified personnel to carry out transportation including hoisting by crane and forklift driving. Failure to comply may result in serious injury or significant damage.
4	Wear personal protective equipment (PPE) during transportation with a crane or forklift. Prohibit any personnel from standing or staying around the transportation route.
5	When using eye bolts, do not use steel sling to bind the robot arms for hoisting. Failure to comply may cause device damage or personal injury due to uneven force distribution.
6	Keep the equipment balance when hoisting the equipment. Otherwise, the equipment may fall, resulting in serious injury or damage.
7	Handle the product with gloves and anti-smash shoes.
8	The equipment is heavy. Do not handle it with bare hands.
9	When removing the anchor bolts or mounting bolts from the manipulator fixed on the pallet, support the manipulator in advance to prevent it from tipping over. Otherwise, the manipulator will tip over, which may trap your hands or feet.
10	The robot body contains many precision parts. Therefore, prevent excessive shocks and vibrations when handling it.
11	When using a crane or forklift to handle a robot, never support the robot body by personnel.
12	Do not lie on the robot or stand under the lifted robot during handling.

Handling with a crane

In principle, use a crane to move and transport the robot.

Note

To use a crane to handle a robot body, the steel sling load capacity must be greater than the total weight of the robot body and other auxiliary handling accessories. Example:

- For the IR-R300 series model with a body weight of 1,480 kg, the steel sling load capacity must be at least 1,500 kg.
- For the IR-R50&60&80 series model with a body weight of 680 kg, the steel sling load capacity must be at least 700 kg.
- For the IR-R20 series model with a body weight of 245 kg, the steel sling load capacity must be at least 500 kg.

For the weight of the robot body, see the specifications table in the "Product Information" chapter in the robot body user guide.

For the steel sling load capacity, see the "Handling" section in the "Unpacking and Handling" chapter in the robot body user guide.

---

1. Set up the robot in the factory posture as shown in the figure below, then install four eye bolts (M16) on the rotation base, and lift it with four steel slings. It is recommended that the steel sling length be 2 m. Use rubber hoses or similar protection at contact points between steel slings and the robot body.

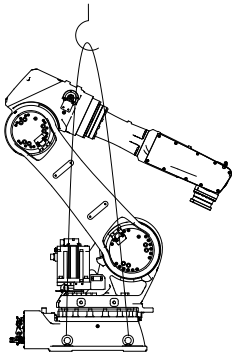

Figure 6-1 Lifting the robot

2. Use four steel slings to lift the robot. Ensure that the robot is balanced before moving the crane.
3. Move the robot independently or collaboratively, provided that the operation requirements of the crane are met. Slowly raise the robot body and transport it to the installation base table.

Handling the control cabinet and robot body by using a forklift

Caution

- The load capacity of the forklift used to handle the control cabinet must be greater than the total weight of the robot body, control cabinet, and auxiliary pallet.
- For the weight of the robot body, see the specifications table in the "Product Information" chapter in the robot body user guide.
- For the weight of the control cabinet, see the specifications table in the "Product Information" chapter in the control cabinet user guide.
- For the forklift load capacity, see the "Handling" section in the "Unpacking and Handling" chapter in the robot body user guide.

When handling the robot using a forklift, secure the robot onto its original pallet or a baseplate with sufficient load-carrying capacity with screws. Insert the fork of the forklift under the pallet or baseplate and lift the robot together with the pallet or baseplate.

Transport the robot slowly and carefully to prevent it from toppling or tilting over.

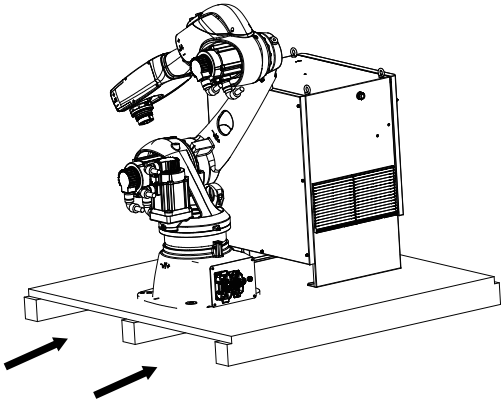

Figure 6-2 Handling the robot with a forklift

Handling the robot body (handling options)

Caution

To use a forklift to handle a robot body, select the forklift with suitable load capacity, fork width, and fork distance. The details are listed as follows:

- The load capacity of the forklift used to handle the robot body must be greater than the total weight of the robot body and the auxiliary pallet.
- For specific parameters of fork width and fork distance, see the "Handling" section in the "Unpacking and Handling" chapter in the corresponding robot body user guide.
- For the weight of the robot body, see the specifications table in the "Product Information" chapter in the robot body user guide.
- For the forklift load capacity, see the "Handling" section in the "Unpacking and Handling" chapter in the robot body user guide.

Options	Code	Description
Forklifting tool	01660012	Tools used by the forklift to transport the robot body fixed on the base

1. Take the IR-R20 series 6-axis robot as an example. Install four forklifting tools at the four M16 threaded holes on the robot base according to the posture, as shown in the following figure. The forklift load capacity is at least 1,000 kg, the fork width is no more than 150 mm, and the distance between two forks is greater than 520 mm.

2. Ensure that the robot body is balanced before moving the forklift, so that it does not tip or tilt. Do not approach the forklift during transportation. Slowly raise the robot body and transport it to the installation base table.

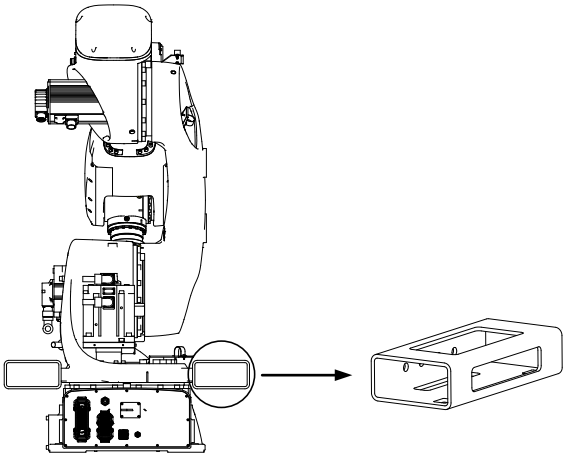

Figure 6-3 Installation of forklifting tools

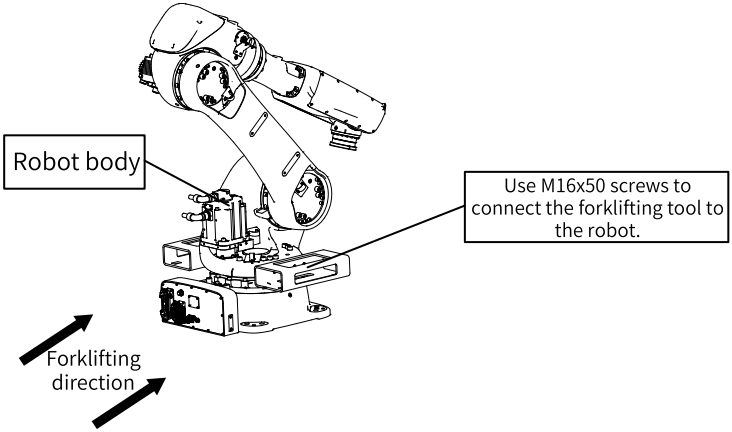

Figure 6-4 Forklifting direction

6.4 Installation

No.	Precautions
1	Do not allow non-professionals to perform equipment installation, wiring, maintenance, inspection, or parts replacement.
2	Install a safety fence for the system. Failure to comply may result in severe safety issues.

No.	Precautions
3	Reserve sufficient space between the equipment and surrounding buildings, structural parts, and devices. Failure to comply may cause serious injury or major damage.
4	Fix the robot body before turning on the power or operating the system. Otherwise, the robot body may fall over and cause serious injury or major damage.
5	Disconnect the controller power supply and main power supply before installation.
6	During installation, set up conspicuous signs in mounting sections, and lock the main power supply switch or hang a conspicuous sign on it, to prevent accidental power-on by operators or other personnel. Failure to comply will cause unpredictable collisions, electric shocks, and other accidents.
7	To start a robot, ensure that the robot is properly installed before powering on the controller, and adjust the robot to the specified posture. Disconnect the controller power supply and main power supply again, lock the power switch, and set up conspicuous signs before starting related operations.

Reminders for fixture installation:

Before use, ensure that the fixture is firmly connected and that the power sources (such as the air pressure source and voltage source) for the fixture are stable. Ensure that no workpiece or tool falls off unexpectedly.

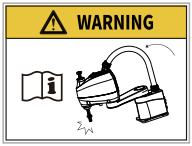

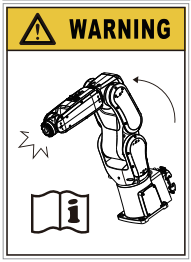

6.5 Wiring

No.	Precautions
1	Do not allow non-professionals to perform equipment installation, wiring, maintenance, inspection, or parts replacement.
2	Cut off the power before wiring. Failure to comply may result in an electric shock or system failure.
3	Before wiring, cut off all the power supplies of the equipment. Wait at least 10 minutes before further operations because residual voltage exists after power-off.
4	Ensure that safety input signals, such as the emergency stop switch and safety door switch, are connected correctly. Otherwise, safety protection functions will not work properly in emergency cases, causing serious injury or damage.
5	To ensure the safety of the equipment and operators and prevent electric shocks, use cables with sufficient diameters to reliably ground the equipment.

No.	Precautions
6	During wiring, follow the ESD procedures and wear an ESD wrist strap. Failure to comply may result in damage to internal circuits of the equipment.
7	Connect the cables securely. Do not lay heavy objects on the cables, or bend or drag the cables forcibly. Failure to comply will result in cable damage, wire breaking, or poor contact, causing electric shocks or system faults.
8	Ensure that the diameter and shielding of the cables used meet corresponding requirements, and that the cable shield is grounded reliably at one end.
9	Make the connections in correct sequence. Otherwise, the system may not work properly, which may cause safety hazards.
10	After wiring, make sure that no dropped screws and exposed cables are inside the equipment.

Take the IRCB101 series high-protection robot control cabinet as an example.

Power supply specifications

The product needs a single-phase 220 VAC power supply or a three-phase 380 V (±10%) power supply, with a frequency of 50 Hz/60 Hz and an electrical fast transient/burst immunity less than 2 kV. For specific power supply specifications, see the user guide for each series of robot.

AC power cord

Installation, wiring, maintenance, and inspection of the product must be carried out only by trained technicians with electrical expertise.

Cut off all external power supplies before wiring. Failure to comply may cause electric shocks, equipment faults, or no actions.

Ensure that the AC power cord is correctly connected to the power plug, not directly to the factory power source. Before delivery, Inovance has equipped the product with corresponding cables. If customers need to select cables, the cables should comply with applicable safety regulations, with the rated current over 10 A.

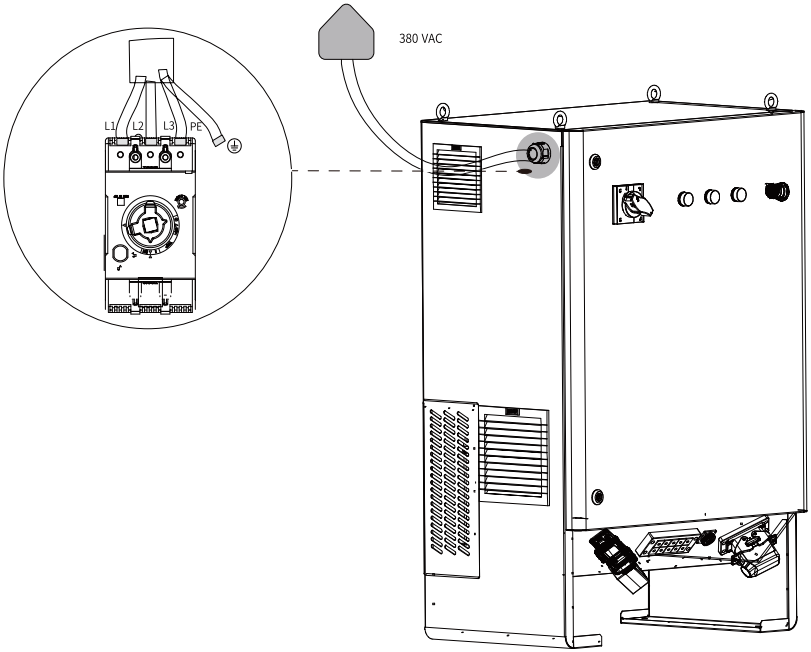

Figure 6-5 Power supply connection

Make sure the power supply is blocked by unplugging the power supply connector. Connecting to the factory power source to work may cause electric shocks or failure.

Be sure to connect the grounding wire (green/yellow) of the AC power cord to the PE terminal of the power distribution system.

Incorrect connection of the grounding wire may cause electric shocks. Always use a plug for power connecting cable. Do not connect the control cabinet directly to a factory power source.

6.6 Operating Mode

Precautions

No.	Description
1	Before operation, operators should read the safety section of this user guide carefully. Failure to understand or follow the specifications may cause serious accidents and major losses.
2	Before power-on, ensure that there are no operators in the motion range of the robot.
3	Operators should not enter the motion range of the robot before powering off the robot, even if the robot is stationary since it may operate in a sudden.
4	Operate the robot system from a low speed to a high speed gradually. Starting with a high speed will cause equipment damage and safety accidents.

No.	Description
5	In case of robot action exceptions during robot system operation, press the emergency stop switch immediately. Never continue the operation upon exceptions. Failure to comply may cause unpredictable damage.
6	Disconnect the plug for complete power-off. Be sure to use the power cord and plug that come with the system, and do not replace the power cord or directly connect the chassis to the factory power source.
7	Power off all parts to be maintained and replaced, and disconnect the plug. Do not perform operations while the power is on. Failure to comply may result in an electric shock.
8	In principle, the system should be operated by one operator. If multiple operators are needed, make sure that all operators can communicate effectively and take necessary safety measures.

Operating modes

Operating Mode	Description	Switchover Method
Manual mode (MANUAL)	This mode allows operators to approach the robot and use the teach pendant for point data teaching, confirmation, or program inspection. In this mode, the robot always operates at a low power, which is the manual speed reduction mode defined in the safety standard, with the end effector moving at a speed no more than 250 mm/s. Common tasks in this mode include: • Creating and editing RAPID programs • Starting, step-by-step running, and stopping program execution, such as program testing • Correcting I/O signal values upon errors • Adjusting the preset position • Single-step program execution • Starting/Stopping program execution for final program validation • Setting program pointers	Press the mode switchover button, enter the password, and switch to "MANUAL". Then the mode switches from the automatic mode (AUTO) to the manual mode (MANUAL). If the program is switched to the manual mode (MANUAL) during execution, the program is interrupted, and the running robot immediately stops.
Automatic mode (AUTO)	This mode is used for automatic operation (program execution), programming, debugging, adjustment, and maintenance of robot system running. In this mode, robot actions or program execution are not allowed when the safety door is opened. Common tasks in this mode include: • Starting and stopping processes • Loading, starting, and stopping RAPID programs • Returning the manipulator to its original path during restoration after an emergency stop • Monitoring the operation status	Press the mode switchover button, enter the password, switch to "AUTO", and close the start confirmation switch. Then the mode switches to from the manual mode (MANUAL) to the automatic mode (AUTO). If the start confirmation switch is turned on, the mode automatically switches to the manual mode (MANUAL), the program is interrupted, and the running robot immediately stops.

6.7 Operation

6.7.1 Safety Requirements Before Operation

Space

- Robot motion space

Before operation, ensure that sufficient space is reserved for normal movement and emergency stop of the robot to prevent collisions during operation and stop.

- Working space

The working space includes the safety and maintenance space and the space required by operators.

The safety distance over or through mechanical protection should meet the requirements of ISO 13857. The minimum distance from interlock protection devices and other disconnection devices should meet the requirements of ISO 13855. The distance to prevent squeezing by maintaining a minimum clearance should meet the requirements of ISO 13854.

The minimum distance for high-speed operation in manual mode is 0.5 m.

The reserved clearance should not be less than 0.5 m when the safety door is open. The minimum distance for guard devices should meet the requirements of ISO 13857.

The height of guard devices (such as a fence) should not be less than 1.4 m.

Overload capacity

Never use a load exceeding the maximum load of each model. For details about the maximum load of each model, see the corresponding user guide.

6.7.2 Programming and Teaching

Robot teaching is in manual mode.

The linear speed at the flange of the robot is restricted within 250 mm/ms. It is also risky for an operator to operate the robot system in close distance. Therefore, the teach pendant should be controllable in a timely manner. Before leaving the teach pendant, the operator should power off the controller or enter the emergency stop state and hang a "maintenance" sign.

During program verification, all personnel should be outside the safe range. The operator needs to undergo pre-training and supervise the entire process.

Before initial teaching, check the safety of the robot system. The check items are as follows.

Stage	Item
Enable	Check for mechanical exceptions when enabling the robot system. In case of no exceptions, electrical wiring problems caused by transportation or maintenance can be preliminarily excluded.
Single-joint teaching	Check the movement direction, speed, and vibration of each joint. In case of no exceptions, electrical wiring is normal, preliminarily excluding motion-related system parameter problems.
Zero point confirmation	In single-joint teaching mode, return each joint to its zero point and check whether each zero point is correct. Zero points are normal.
Unidirectional teaching	Check the straightness of the trajectory. In case of no exceptions, motion-related system parameter problems are excluded.
Operation in automatic mode	Trigger an emergency stop in the static state and check the response of the safety circuit. In case of no exceptions, safety circuit problems are excluded.

6.7.3 Automatic Operation

Programs of properly produced robots run in automatic mode.

If the robot speed exceeds 250 mm/ms, the robot program runs without human intervention, and all personnel should stay outside the safe range.

In automatic mode, robot programs are executed according to the set process. External intervention during the process may disrupt the entire process, such as pause, stop, emergency stop, collision, power-off, and submodule failure. Production should be restored by personnel who are familiar with the entire process to prevent unforeseen exceptions.

Before automatic operation, ensure that safety protection functions such as the safety door take effect.

Ensure that the protection functions such as the speed limit are disabled.

6.8 Troubleshooting

To troubleshoot robot system faults, only the personnel who have completed special training for this robot model or similar models can perform the troubleshooting.

For unpacking check, ensure that the power has been off for more than 12 minutes. Failure to comply may result in an electric shock.

If troubleshooting must be carried out with the power on, two persons are required. One of them must be prepared to press the stop button immediately, while the other must keep alert and work quickly within the robot's motion range to prevent electric shocks.

An evacuation path must be provided before operation.

For common fault diagnosis and solutions, see the user guide of each robot model.

6.9 Maintenance

Before maintenance, read the precautions for maintenance, this guide, and other related guides carefully to fully understand the methods of safe maintenance. The robot system must only be maintained by qualified personnel.

In case of a fault, report all detailed information to Inovance, including the robot model, control cabinet model, teach pendant model, and option status.

Strictly comply with the following specifications and refer to relevant international and Chinese safety standards.

No.	Precautions
1	Robots that automatically run for a long time should be periodically inspected and maintained.
2	Before entering the safety fence, confirm that all necessary safety measures are prepared.
3	Before entering the safety fence, disable the automatic mode. If the robot moves abnormally, immediately press the emergency stop switch and evacuate from the designated evacuation route.
4	In addition to the emergency stop switch in the operator's hand, install another one for the inspector in a place where the motion ranges of all robots can be observed outside the safety fence. If the robot moves abnormally during maintenance, the emergency stop switch must be easily accessible to the inspector. After an emergency stop, reset and restart the robot outside the fence.
5	Before maintenance, ensure sufficient space around the robot to prevent interference with peripheral devices. In addition, fix the peripheral devices to prevent any sudden movements that may pose risks to personnel.
6	With compressed air or water supplied, cut off the supply and clear all residual voltage in pipelines before maintenance.
7	Use lockout and tagout signs to prevent anyone from inadvertently powering on the robot.
8	Before part replacement, turn off the power supply of the controller and related devices and unplug the power connector. There are high-voltage parts inside the control cabinet, which may cause electric shocks even when the power supply is off.
9	During operation, check for abnormal movements and possible collision points of the robot system.
10	Do not install or remove the motor connector with the power on. Otherwise, it may lead to abnormal movements of the manipulator.
11	Overhaul and maintenance must be carried out with the power on. In this case, two persons are required. One of them must be prepared to press the stop button immediately, while the other must keep alert and work quickly within the robot's motion range In addition, an evacuation path must be provided before operation.
12	When replacing an optional expansion card, wear ESD gloves for operation. Do not touch the circuit board area directly with your hands. Otherwise, electronic components may be damaged.
13	To touch the components on the board, completely discharge the static electricity on the human body in advance.

6.10 Backup

To ensure the safety of system data, it is necessary to back up teaching files and system parameters in the following situations. Prepare a USB 2.0 flash drive before backup.

- Back up system parameters before system upgrade or flashing.
- Back up system parameters after key parameters are modified.
- Back up system parameters to the root directory of the USB flash drive, and name the files as robotcfg.cfg.bk. To prevent file overwrite, change the name of the backup file before the next backup.
- Back up teaching files after the teaching program is completed.
- Back up teaching files to the root directory of the USB flash drive, and name the folders as TeachProgram, PalletInfo, TecParameter, and robot_other_pfile. To prevent file overwrite, change the name of the backup folder before the next backup.

PS00012378A01

Copyright © Shenzhen Inovance Technology Co., Ltd.

Shenzhen Inovance Technology Co., Ltd.

www.inovance.com

Add.: Inovance Headquarters Tower, High-tech Industrial Park,
Guanlan Street, Longhua New District,
Shenzhen 518000, P.R. China
Tel: (0755) 2979 9595 Fax: (0755) 2961 9897

Suzhou Inovance Technology Co., Ltd.

www.inovance.com

Add.: No. 52, Tian'e Dang Road, Wuzhong District,
Suzhou 215104, P.R. China
Tel: (0512) 6637 6666 Fax: (0512) 6285 6720