INOVANCE

FORWARD, ALWAYS PROGRESSING

SV670P Series Servo Drive

Selection Guide

Industrial Automation | Intelligent Elevator | New Energy Vehicle | Industrial Robot | Rail Transit

Data code 19011852 A03

Preface

Introduction

Thank you for purchasing the SV670P series servo drive developed by Inovance.

The SV670P series servo drive is a high-end servo drive designed based on global-leading standards and high-end application needs. It is featured with high speed, high precision, high performance, and tuning-free Function.

The servo drive covers a power range from 0.05 kW to 7.5 kW and carries Modbus communication interfaces to work with the host controller for a networked operation of multiple servo drives. The drive comes with the ITune function which supports adaptive stiffness level setting, inertia auto-tuning, and vibration suppression for easy use. The SV670P series servo drive, together with an MS1 series high-response servo motor (with ultra-low, low or medium inertia) equipped with a 23-bit single-turn/multi-turn absolute encoder, aims to deliver quiet and stable operation and accurate process control through the fully closed-loop function and internal process segment function.

The drive also offers dynamic braking. The drive aims to achieve quick and accurate position control, speed control, and torque control through high-performance solutions for automation equipment in such industries as electronic manufacturing, lithium batteries, manipulators, packaging, and machine tools.

This manual provides instructions on product selection, including the list of supporting components, technical data on the drive and motor, and the selection guide of cables.

More Documents

Name	Data Code	Description
SV670P Series Servo Drive Selection Guide	19011852	Provides instructions on product selection, including the list of supporting components, technical data on the drive and motor, and the selection guide of cables.
SV670P Series Servo Drive installation Guide	19011868	Presents installation of the servo drive, including installation steps, , mechanical installation, and electrical installation.
SV670P Series Servo Drive Hardware Guide	19011854	Presents electrical design guidance of the equipment, description of terminals, required certificates and standards and solutions to common EMC problems.
SV670P Series Servo Drive Commissioning Guide	19011856	Presents servo commissioning, parameter descriptions, including the operating panel, commissioning software, commissioning procedure and a parameter list.
SV670P Series Servo Drive Function Guide	19011866	Presents functions and parameters, including function overview, basic servo functions, adjustment and parameter list.
SV670P Series Servo Drive Communication Guide	19011871	Presents functions and parameters of the servo drive, including Modbus communication configuration, parameter descriptions, and communication application cases.
SV670P Series Servo Drive Troubleshooting Guide	19011869	Introduces faults and fault levels, the troubleshooting process, warning codes and fault codes.

Name	Data Code	Description
SV670P Series Servo Drive Maintenance Guide	19011870	Provides instructions on maintenance and repair of the equipment.
SV670P Series Servo Drive Safety Guide	19011867	Presents the safety function and related certifications and standards, wiring, commissioning process, troubleshooting, and functions.
SV670P Series Servo Drive Manual Package	PS00005526	Provides information on selection, installation, commissioning, function, troubleshooting and parameters of the equipment.

Revision History

Date of Revision	Version	Description
2022-07	A03	• Updated the selection list. • Added information on power loss in electrical specifications. • Deleted manufacturer and model recommendation for the absolute encoder battery. • Updated the schematic diagram of the drive.
2022-05	A02	• Changed the control circuit and main circuit to 380 VAC to 440 VAC in electrical specifications of the drive (three-phase 380 V). • Modified the description of the model number.
2022-05	A01	• Added cable model naming. • Added motor selection examples.
2022-04	A00	First release.

Document Acquisition

This manual is not delivered with the product. You can obtain the PDF version by visiting:

- http://www.inovance.com.
- Scan the QR code on the equipment to acquire more.

Table of Contents

Preface 1

1 Selection 6

2 SV670P Series 9

2.1 Product Information 9

2.1.1 Nameplate and Model Number 9

2.1.2 Components 10

2.1.2.1 Servo Drives in Size A and Size C (Rated Power: 0.2 kW to 1.5 kW) 10

2.1.2.2 Servo Drives in Size D (Rated Power: 1.5 kW to 3.0 kW) 12

2.1.2.3 Servo Drives in Size E (Rated Power: 5.0 kW to 7.5 kW) 14

2.1.1 Product Dimensions 15

2.2 General Specifications 16

2.2.1 Electrical Specifications 16

2.2.2 Basic Specifications 19

2.2.3 Dynamic Brake Characteristics 21

3 MS1 Motor Series 23

3.1 Product Information 23

3.1.1 Nameplate and model number of the servo drive 23

3.1.2 Components of Servo Drives and Servo Motors 24

3.1.3 Motor Models 26

3.2 General Specifications 26

3.2.1 Mechanical characteristics 26

3.2.2 Overload Characteristics 28

3.2.3 Derating Characteristics 29

3.2.4 Temperature curve of the oil sealing 29

3.2.5 Load moment of inertia 29

3.2.6 Ratio Characteristics for Allowable Load Moment of Inertia of Servo Unit Without Built-in Regenerative Resistor 30

3.3 Selection Precautions 30

3.4 Motor with Low Inertia and Small Capacity (MS1H1) 32

3.4.1 MS1H1-05B30CB-A33*Z(-S) 32

3.4.2 MS1H1-10B30CB-A33*Z(-S) 33

3.4.3 MS1H1-20B30CB-A33*Z(-S) 34

3.4.4 MS1H1-40B30CB-A33*Z(-S) 35

3.4.5 MS1H1-55B30CB-A331Z(-S) 36

3.4.6 MS1H1-75B30CB-A33*Z(-S) 37

3.4.7 MS1H1-10C30CB-A331Z(-S) 38
3.5 Motor with Low Inertia and Medium Capacity (MS1H2) 39
3.5.1 MS1H2-10C30CB-A33*Z 39
3.5.2 MS1H2-10C30CD-A33*Z 40
3.5.3 MS1H2-15C30CB-A33*Z 41
3.5.4 MS1H2-15C30CD-A33*Z 42
3.5.5 MS1H2-20C30CD-A331Z 43
3.5.6 MS1H2-20C30CD-A334Z-S4 44
3.5.7 MS1H2-25C30CD-A331Z 45
3.5.8 MS1H2-25C30CD-A334Z-S4 46
3.5.9 MS1H2-30C30CD-A331Z 47
3.5.10 MS1H2-30C30CD-A334Z-S4 48
3.5.11 MS1H2-40C30CD-A331Z 49
3.5.12 MS1H2-40C30CD-A334Z-S4 50
3.5.13 MS1H2-50C30CD-A331Z 51
3.5.14 MS1H2-50C30CD-A334Z-S4 52
3.6 Motor with Medium Inertia and Medium Capacity (MS1H3) 53
3.6.1 MS1H3-85B15CB-A33*Z 53
3.6.2 MS1H3-85B15CD-A33*Z 54
3.6.3 MS1H3-13C15CB-A33*Z 55
3.6.4 MS1H3-13C15CD-A33*Z 56
3.6.5 MS1H3-18C15CD-A33*Z 57
3.6.6 MS1H3-29C15CD-A33*Z 58
3.6.7 MS1H3-44C15CD-A33*Z 59
3.6.8 MS1H3-55C15CD-A33*Z 60
3.6.9 MS1H3-75C15CD-A33*Z 61
3.7 Motor with Medium Inertia and Small Capacity (MS1H4) 62
3.7.1 MS1H4-10B30CB-A33*Z 62
3.7.2 MS1H4-40B30CB-A33*Z(-S) 63
3.7.3 MS1H4-75B30CB-A33*Z(-S) 64
4 Optional parts 66
4.1 List of Optional Parts 66
4.2 Cables 67
4.2.1 Description of the Model Number 67
4.2.2 Cable Type 69
4.2.3 Cable Selection 70
4.3 Peripheral components 74

4.3.1 Fuse 74
4.3.2 Electromagnetic contactor 75
4.3.3 Circuit breaker 75
4.3.4 AC Input Reactor 76
4.3.5 EMC filter 78
4.3.6 Magnetic Ring and Magnetic Buckle 80
4.4 Absolute Encoder Batteries 82
5 Compliance List 84
6 Capacity Selection Example for Servo Motor 85
6.1 Capacity Selection Example for Position Control 85
6.2 Capacity Selection Example for Speed Control 88

1 Selection

MS1 series servo motors

Servo Drive (SV670*****I)				Servo Motor			
Voltage Class	Size	Recom mended Drive Model	H01.10 No.	Motor without brake	Motor with brake	Flange Size	Power (kW)
MS1H1 (n_N=3000rpm, n_{max} =6000rpm) series ratings							
Single-phase/ Three-phase 220 V	A	S1R6	00002	MS1H1-05B30CB-A330Z	MS1H1-05B30CB-A332Z	40	0.05
				MS1H1-10B30CB-A330Z	MS1H1-10B30CB-A332Z	40	0.1
				MS1H1-20B30CB-A331Z MS1H1-20B30CB-A331Z-S	MS1H1-20B30CB-A334Z MS1H1-20B30CB-A334Z-S	60	0.2
Single-phase/ Three-phase 220 V		S2R8	00003	MS1H1-40B30CB-A331Z MS1H1-40B30CB-A331Z-S	MS1H1-40B30CB-A334Z MS1H1-40B30CB-A334Z-S	60	0.4
Single-phase/ Three-phase 220 V	C	S5R5	00005	MS1H1-55B30CB-A331Z MS1H1-55B30CB-A331Z-S	-	80	0.55
Single-phase/ Three-phase 220 V		S5R5	00005	MS1H1-75B30CB-A331Z MS1H1-75B30CB-A331Z-S	MS1H1-75B30CB-A334Z MS1H1-75B30CB-A334Z-S	80	0.75
Single-phase/ Three-phase 220 V	C	S7R6	00006	MS1H1-10C30CB-A331Z MS1H1-10C30CB-A331Z-S	-	80	1.0
MS1H2 (n_N=3000rpm, n_{max} =6000rpm/5000rpm) series ratings							
Single-phase/ Three-phase 220 V	C	S7R6	00006	MS1H2-10C30CB-A331Z	MS1H2-10C30CB-A334Z	100	1.0
Three-phase 380 V		T5R4	10002	MS1H2-10C30CD-A331Z	MS1H2-10C30CD-A334Z	100	1.0
Single-phase/ Three-phase 220 V	D	S012	00007	MS1H2-15C30CB-A331Z	MS1H2-15C30CD-A334Z	100	1.5
Three-phase 380 V	C	T5R4	10002	MS1H2-15C30CD-A331Z	MS1H2-15C30CB-A334Z	100	1.5
Three-phase 380 V	D	T8R4	10003	MS1H2-20C30CD-A331Z	MS1H2-20C30CD-A334Z-S4	100	2.0
Three-phase 380 V		T8R4	10003	MS1H2-25C30CD-A331Z	MS1H2-25C30CD-A334Z-S4	100	2.5
Three-phase 380 V		T012	10004	MS1H2-30C30CD-A331Z	MS1H2-30C30CD-A334Z-S4	130	3.0
Three-phase 380 V	E	T017	10005	MS1H2-40C30CD-A331Z	MS1H2-40C30CD-A334Z-S4	130	4.0
Three-phase 380 V		T017	10005	MS1H2-50C30CD-A331Z	MS1H2-50C30CD-A334Z-S4	130	5.0
MS1H3 (n_N=1500rpm, n_{max} =3000rpm) series ratings							
Single-phase/ Three-phase 220 V	C	S7R6	00006	MS1H3-85B15CB-A331Z	MS1H3-85B15CB-A334Z	130	0.85
Three-phase 380 V		T3R5	10001	MS1H3-85B15CD-A331Z	MS1H3-85B15CD-A334Z	130	0.85
Single-phase/ Three-phase 220 V	D	S012	00007	MS1H3-13C15CB-A331Z	MS1H3-13C15CB-A334Z	130	1.3
Three-phase 380 V	C	T5R4	10002	MS1H3-13C15CD-A331Z	MS1H3-13C15CD-A334Z	130	1.3

Servo Drive (SV670*****I)				Servo Motor			
Voltage Class	Size	Recom mended Drive Model	H01.10 No.	Motor without brake	Motor with brake	Flange Size	Power (kW)
Three-phase 380 V	D	T8R4	10003	MS1H3-18C15CD-A331Z	MS1H3-18C15CD-A334Z	130	1.8
Three-phase 380 V		T012	10004	MS1H3-29C15CD-A331Z	MS1H3-29C15CD-A334Z	180	2.9
Three-phase 380 V	E	T017	10005	MS1H3-44C15CD-A331Z	MS1H3-44C15CD-A334Z	180	4.4
Three-phase 380 V		T021	10006	MS1H3-55C15CD-A331Z	MS1H3-55C15CD-A334Z	180	5.5
Three-phase 380 V		T026	10007	MS1H3-75C15CD-A331Z	MS1H3-75C15CD-A334Z	180	7.5
MS1H4 (n_N=3000rpm, n_{max} =6000rpm) series ratings							
Single-phase/ Three-phase 220 V	A	S1R6	00002	MS1H4-10B30CB-A330Z	MS1H4-10B30CB-A332Z	40	0.1
Single-phase/ Three-phase 220 V		S2R8	00003	MS1H4-40B30CB-A331Z MS1H4-40B30CB-A331Z-S	MS1H4-40B30CB-A334Z MS1H4-40B30CB-A334Z-S	60	0.4
Single-phase/ Three-phase 220 V	C	S5R5	00005	MS1H4-75B30CB-A331Z MS1H4-75B30CB-A331Z-S	MS1H4-75B30CB-A334Z MS1H4-75B30CB-A334Z-S	80	0.75

MCS1 series servo motors with deceleration

Servo Drive (SV670*****I)				Servo Motor				
Voltage Class	Size	Recom mended Drive Model	H01.10 No.	Model	Motor without brake	Motor with brake	Flange Size	Power (kW)
Single-phase/ Three-phase 220 V	A	S2R8	00003	MCS1H4-40B30CB-	60F/70Y053-A331R	60F/70Y053-A334R	60	0.4
Single-phase/ Three-phase 220 V					60F/70Y103-A331R	60F/70Y103-A334R		
Single-phase/ Three-phase 220 V					60F/70Y255-A331R	60F/70Y255-A334R		
Single-phase/ Three-phase 220 V	C	S5R5	00005	MCS1H4-753B30CB-	90F/90Y053-A331R	90F/90Y053-A334R	80	0.75
Single-phase/ Three-phase 220 V					90F/90Y103-A331R	90F/90Y103-A334R		
Single-phase/ Three-phase 220 V					90F/90Y255-A331R	90F/90Y255-A334R		
Single-phase/ Three-phase 220 V	C/D	S7R6/S012	00006/00007	MCS1H1-10C30CB-	90F/90Y053-A331R	-		1.0
Single-phase/ Three-phase 220 V					90F/90Y103-A331R			
Single-phase/ Three-phase 220 V					90F/90Y255-A331R			

Servo Drive (SV670*****I)				Servo Motor				
Voltage Class	Size	Recom mended Drive Model	H01.10 No.	Model	Motor without brake	Motor with brake	Flange Size	Power (kW)
Single-phase/ Three-phase 220 V	C	S7R6	00006	MCS1H3-85B15CB-	115F/120Y053-A331R	115F/120Y053-A334R	130	0.85
Single-phase/ Three-phase 220 V					115F/120Y103-A331R	115F/120Y103-A334R		
Single-phase/ Three-phase 220 V					115F/120Y255-A331R	115F/120Y255-A334R		
Three-phase 380 V		T3R5	10001	MCS1H3-85B15CD-	115F/120Y053-A331R	115F/120Y053-A334R		
Three-phase 380 V					115F/120Y103-A331R	115F/120Y103-A334R		
Three-phase 380 V					115F/120Y255-A331R	115F/120Y255-A334R		
Single-phase/ Three-phase 220 V	D	S012	00007	MCS1H3-13C15CB-	115F/120Y053-A331R	115F/120Y053-A334R		1.3
Single-phase/ Three-phase 220 V					115F/120Y103-A331R	115F/120Y103-A334R		
Single-phase/ Three-phase 220 V					115F/120Y255-A331R	115F/120Y255-A334R		
Three-phase 380 V	C	T5R4	10002	MCS1H3-13C15CD-	115F/120Y053-A331R	115F/120Y053-A334R		
Three-phase 380 V					115F/120Y103-A331R	115F/120Y103-A334R		
Three-phase 380 V					115F/120Y255-A331R	115F/120Y255-A334R		
Three-phase 380 V	D	T8R4	10003	MCS1H3-18C15CD-	115F/120Y053-A331R	115F/120Y053-A334R		1.8
Three-phase 380 V					115F/120Y103-A331R	115F/120Y103-A334R		

2 SV670P Series

2.1 Product Information

2.1.1 Nameplate and Model Number

2.1.1.1

Description of the Model Number

SV670 P S 2R8 I - FS
① ② ③ ④ ⑤ ⑥

① **Product Series** SV670: SV670 general-purpose servo drive	④ **Rated output current**		⑤ **Model configuration** I: General-purpose
② **Product type** N: Network type P: Pulse type A: CANlink type C: CANopen type	S: 220 V	1R6: 1.6 A 2R8: 2.8 A 5R5: 5.5 A 7R6: 7.6 A 012: 12.0 A 018: 18.0 A 022: 22.0 A 027: 27.0 A	
③ **Voltage class** S: 220 V T: 380 V	T: 380 V	3R5: 3.5 A 5R4: 5.4 A 8R4: 8.4 A 012: 12.0 A 017: 17.0 A 021: 21.0 A 026: 26.0 A	⑥ **Non-standard features** Blank: standard FH: High protection FS: Functional safety models only come with STO PTC: Motor temperature detection

Description of the nameplate

Figure 2-1 Description of the nameplate

Encryption of the production serial number

01050202 4 P 7 00001
① ② ③ ④ ⑤

① **Internal code** Material code	③ **Year** 9: 2009 A: 2010 ... P: 2022 ... Note: I/L/O/Q is not used.	⑤ **Lot number** 00001: 1st in current month 00002: 2nd in current month 00003: 3rd in current month ... Range: 00001 to 99999
② **Manufacturer code** 4: Suzhou Inovance	④ **Month** 1: January 2: February ... A: October B: November C: December	

Example: The S/N 010502024P700001 indicates the drive is manufactured in July, 2022.

2.1.2 Components

2.1.2.1 Servo Drives in Size A and Size C (Rated Power: 0.2 kW to 1.5 kW)

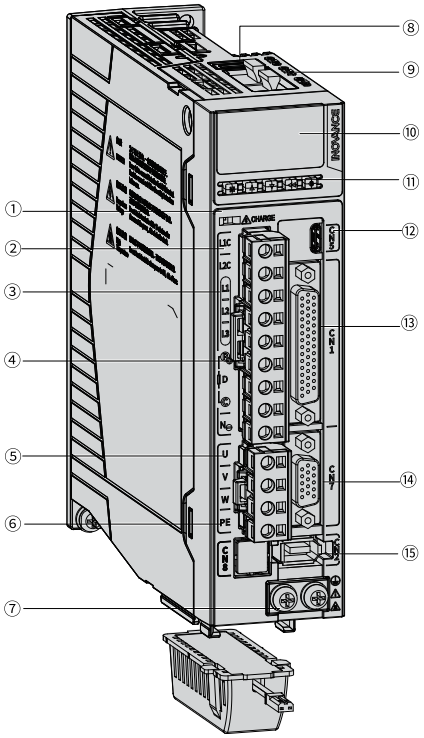

Figure 2-2 Components of servo drive in size A and size C

Table 2–1 Description of components of servo drive in size A and size C

No.	Name	Description
①	CHARGE (bus voltage indicator)	Indicates the electric charge is present in the bus capacitor. When the indicator turns on, charges possibly still exist in the internal capacitor of the servo unit, even if the power supply of the main circuit is OFF. To prevent electric shock, do not touch the power terminals when this indicator lights up.
②	L1C, L2C (control circuit power input terminals)	See the nameplate for the rated voltage class.
③	L1, L2, L3 (main circuit power input terminals)[1]	Power input terminals of the servo drive. See the nameplate for the rated voltage class.
④	P⊕, D, C (terminals for connecting external regenerative resistor)	Remove the jumper bar between terminals P⊕ and C before connecting an external regenerative resistor between terminals P⊕ and D.
	P⊕, N⊖ (servo bus terminals)	Used by the common DC bus for multiple servo drives.
⑤	U, V, W (terminals for connecting the servo motor)	Connected to U, V, and W phases of the servo motor.
⑥	PE grounding terminal	Connected to the grounding terminal of the motor for grounding purpose.
⑦	Servo drive grounding terminal	Connected to the grounding terminal of the power supply for grounding purpose.
⑧	CN6 STO safety function terminal[2]	Connected to external functional safety signal for functional safety purpose.
⑨	CN3, CN4 (communication terminals)[3]	Internally connected in parallel, wiring to RS485, CANopen, and CANlink communication command device.
⑩	5-digit LED display	The 5-digit 8-segment LED display is used to show servo system’s running state and parameter setting.
⑪	Keys	M: Used to switch parameters in sequence. ▲: Increases the value of the blinking bit. ▲: Decreases the value of the blinking bit. ◀◀ : Used to shift the blinking bit leftwards (Hold down: Turning to the next page when the displayed number exceeds five digits). S: Saves modifications and enters the next menu.
⑫	CN5 (communication terminals)	Supports online upgrade and background commissioning when the drive is powered on. In USB mode, the terminal only supports download and upload of parameters, and driver firmware update; The terminal uses USB power supply. If there is a fault that cannot be completely reset, disconnect the USB power supply and drive control power, and then power on again.
⑬	CN1 (control terminal)	Used by reference input signals and other I/O signals.
⑭	CN7 (second encoder feedback terminal)	Supports pulse encoders.
⑮	CN2 (encoder connection terminal)	Connected to the motor encoder terminal.

Note

- The built-in regenerative resistor or jumper bar is not available in models S1R6 and S2R8. If an external regenerative resistor is needed for these models, connect it between terminals P⊕ and C.
- [1]: The power input terminals of the 220V servo drive's main circuit are L1, L2, and L3; and the power input terminals of the 380V servo drive's main circuit are R, S, and T.
- [2]: The CN6 STO safety function terminal is only suitable for non-standard models (-FS).
- [3]: CN3 an CN4 are only available for SV670C.

2.1.2.2 Servo Drives in Size D (Rated Power: 1.5 kW to 3.0 kW)

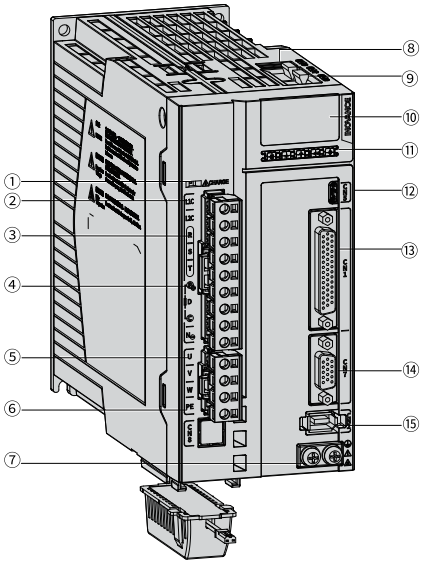

Figure 2-3 Components of servo drive in size D

Table 2–2 Description of components of servo drive in size D

No.	Name	Description
①	CHARGE (bus voltage indicator)	Indicates the electric charge is present in the bus capacitor. When the indicator turns on, charges possibly still exist in the internal capacitor of the servo unit, even if the power supply of the main circuit is OFF. To prevent electric shock, do not touch the power terminals when this indicator lights up.
②	L1C, L2C (control circuit power input terminals)	See the nameplate for the rated voltage class.
③	R, S, T (main circuit power input terminals) [1]	Power input terminals of the servo drive. See the nameplate for the rated voltage class.
④	P⊕, D, C (terminals for connecting external regenerative resistor)	Remove the jumper bar between terminals P⊕ and C before connecting an external regenerative resistor between terminals P⊕ and D.
	P⊕, N⊖ (servo bus terminals)	Used by the common DC bus for multiple servo drives.
⑤	U, V, W (terminals for connecting the servo motor)	Connected to U, V, and W phases of the servo motor.
⑥	PE grounding terminal	Connected to the grounding terminal of the motor for grounding purpose.
⑦	Servo drive grounding terminal	Connected to the grounding terminal of the power supply for grounding purpose.

No.	Name	Description
⑧	CN6 STO safety function terminal[2]	Connected to external functional safety signal for functional safety purpose.
⑨	CN3, CN4 (communication terminals)[3]	Internally connected in parallel, wiring to RS485, CANopen, and CANlink communication command device.
⑩	5-digit LED display	The 5-digit 8-segment LED display is used to show servo system’s running state and parameter setting.
⑪	Keys	M: Used to switch parameters in sequence. ▲: Increases the value of the blinking bit. ▲: Decreases the value of the blinking bit. ◀◀ : Used to shift the blinking bit leftwards (Hold down: Turning to the next page when the displayed number exceeds five digits). S: Saves modifications and enters the next menu.
⑫	CN5 (communication terminals)	Supports online upgrade and background commissioning when the drive is powered on. In USB mode, the terminal only supports download and upload of parameters, and driver firmware update; The terminal uses USB power supply. If there is a fault that cannot be completely reset, disconnect the USB power supply and drive control power, and then power on again.
⑬	CN1 (control terminal)	Used by reference input signals and other I/O signals.
⑭	CN7 (second encoder feedback terminal)	Supports pulse encoders.
⑮	CN2 (encoder connection terminal)	Connected to the motor encoder terminal.

Note

- [1]: The power input terminals of the 220V servo drive’s main circuit are L1, L2, and L3; and the power input terminals of the 380V servo drive’s main circuit are R, S, and T.
- [2]: The CN6 STO safety function terminal is only suitable for non-standard models (-FS).
- [3]: CN3 an CN4 are only available for SV670C.

2.1.2.3 Servo Drives in Size E (Rated Power: 5.0 kW to 7.5 kW)

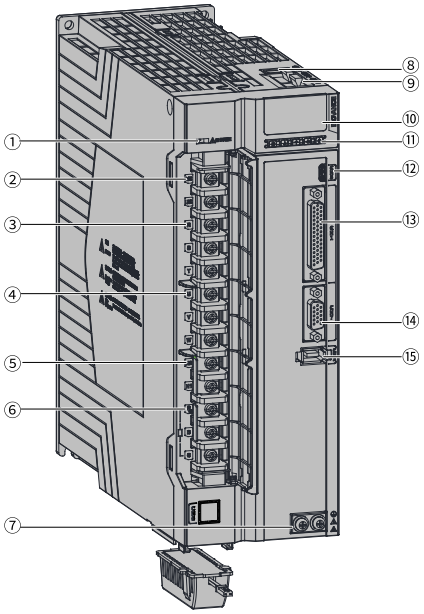

Figure 2-4 Components of servo drive in size E

Table 2–3 Description of components of servo drive in size E

No.	Name	Description
①	CHARGE (bus voltage indicator)	Indicates the electric charge is present in the bus capacitor. When the indicator turns on, charges possibly still exist in the internal capacitor of the servo unit, even if the power supply of the main circuit is OFF. To prevent electric shock, do not touch the power terminals when this indicator lights up.
②	L1C, L2C (control circuit power input terminals)	See the nameplate for the rated voltage class.
③	R, S, T (main circuit power input terminals) [1]	Power input terminals of the servo drive. See the nameplate for the rated voltage class.
④	U, V, W (terminals for connecting the servo motor)	Connected to U, V, and W phases of the servo motor.
⑤	N2, N1 (terminals for connecting external reactor)	Terminals N1 and N2 are jumpered by default. To suppress harmonics in the power supply, remove the jumper between terminals N1 and N2 first and connect an external DC reactor between terminals N1 and N2.
⑥	P⊕, D, C (terminals for connecting external regenerative resistor)	Remove the jumper bar between terminals P⊕ and D before connecting an external regenerative resistor between terminals P⊕ and C.
⑦	Servo drive grounding terminal	Connected to the grounding terminal of the power supply for grounding purpose.
⑧	CN6 STO safety function terminal[2]	Connected to external functional safety signal for functional safety purpose.
⑨	CN3, CN4 (communication terminals)[3]	Internally connected in parallel, wiring to RS485, CANopen, and CANlink communication command device.
⑩	5-digit LED display	The 5-digit 8-segment LED display is used to show servo system’s running state and parameter setting.

No.	Name	Description
⑪	Keys	M: Used to switch parameters in sequence. ▲: Increases the value of the blinking bit. ▲: Decreases the value of the blinking bit. ◀◀ : Used to shift the blinking bit leftwards (Hold down: Turning to the next page when the displayed number exceeds five digits). S: Saves modifications and enters the next menu.
⑫	CN5 (communication terminals)	Supports online upgrade and background commissioning when the drive is powered on. In USB mode, the terminal only supports download and upload of parameters, and driver firmware update; The terminal uses USB power supply. If there is a fault that cannot be completely reset, disconnect the USB power supply and drive control power, and then power on again.
⑬	CN1 (control terminal)	Used by reference input signals and other I/O signals.
⑭	CN7 (second encoder feedback terminal)	Supports pulse encoders.
⑮	CN2 (encoder connection terminal)	Connected to the motor encoder terminal.

Note

- [1]: The power input terminals of the 220V servo drive's main circuit are L1, L2, and L3; and the power input terminals of the 380V servo drive's main circuit are R, S, and T.
- [2]: The CN6 STO safety function terminal is only suitable for non-standard models (-FS).
- [3]: CN3 an CN4 are only available for SV670C.

2.1.1 Product Dimensions

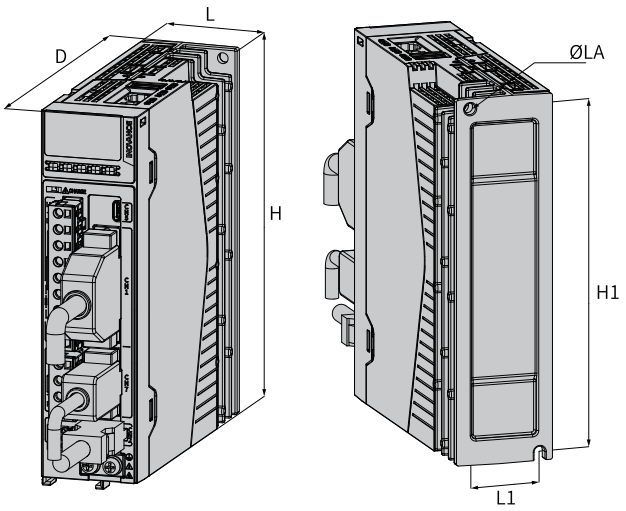

SZIE	L	H	D	L1	H1	D1	ØLA	Tightening Torque	Weight
	Unit: mm (in.)							Unit: N·m	Unit: kg
A	45.5 (1.79)	170 (6.69)	150 (5.91)	33 (1.30)	161 (6.34)	75 (2.95)	2-M4	1.2	0.96
C	55±1 (2.17±0.04)	170 (6.69)	173±1 (6.81±0.04)	44 (1.73)	160 (6.30)	75 (2.95)	2-M4	1.2	1.3
D	80±1 (3.15±0.04)	170 (6.69)	183 (7.20)	71 (2.80)	160 (6.30)	75 (2.95)	3-M4	1.2	1.8
E	90 (3.54)	250 (9.84)	230 (9.06)	78 (3.07)	241 (9.47)	75 (2.95)	4-M4	1.2	3.6

2.2 General Specifications

2.2.1 Electrical Specifications

Single-phase 220 V drive

Item		Size A		Size C		Size D
Servo drive model SV670****I		S1R6	S2R8	S5R5	S7R6	S012
Drive Power (kW)		0.2	0.4	0.75	1.0	1.5
Max. applicable motor capacity (kW)		0.2	0.4	0.75	1.0	1.8
Power supply equipment capacity (kVA)		1.4	2.8	4.6	6.0	8.0
Continuous output current (Arms)		1.6	2.8	5.5	7.6	12.0
Max. output current (Arms)		5.8	10.1	16.9	23.0	32.0
Main circuit	Continuous input current (Arms)	2.3	4.0	7.9	9.6	12.8
	Main circuit power supply	Single-phase 200 VAC–240 VAC, -10 to +10%, 50 Hz/60Hz				
	Energy Loss (W)[1]	12	23.8	38.2	47.32	69.84
Control circuit	Control circuit power supply	Single-phase 200 VAC–240 VAC, -10 to +10%, 50 Hz/60Hz				
	Energy Loss (W)[1]	16				

Item		Size A		Size C		Size D
Braking resistor	Resistance (Ω)	Optional	Optional	50	25	25
	Resistor power (W)	Optional	Optional	50	80	80
	Min resistance of external resistor (Ω)	40	40	40	20	15
	Max. Braking Energy Absorbed by the Capacitor (J)	9.3	18.59	32.42	32.42	47.68
	Braking resistor	All models in the series support built-in and external braking resistors. But Size A does not come with a built-in braking resistor as standard				
Cooling method		Self-cooling		Air cooling		
Overvoltage class		III				

Three-phase 220 V drive

Item		Size A		Size C		Size D	Size E		
Servo drive model SV670****I		S1R6	S2R8	S5R5	S7R6	S012	S018	S022	S027
Drive Power (kW)		0.2	0.4	0.75	1.0	1.5	2.0	2.5	5.0
Max. applicable motor capacity (kW)		0.2	0.4	0.75	1.0	1.8	2.0	2.5	5.0
Power supply equipment capacity (kVA)		1.21	2.42	3.84	5.05	6.68	8.33	10.42	20.08
Continuous output current (Arms)		1.6	2.8	5.5	7.6	12.0	18.0	22.0	27.0
Max. output current (Arms)		5.8	10.1	16.9	23.0	32.0	45	55	67.5
Main circuit	Continuous input current (Arms)	1.1	2.3	4.4	5.1	8.0	8.7	11.0	23.8
	Main circuit power supply	3-phase 200 VAC–240 VAC, -10 to +10%, 50 Hz/60 Hz							
	Energy Loss (W)[1]	12	23.8	38.2	47.32	69.84	120	125	200
Control circuit	Control circuit power supply	Single-phase 200 VAC–240 VAC, -10 to +10%, 50 Hz/60Hz							
	Energy Loss (W)[1]	16							
Braking resistor	Resistance (Ω)	Optional	Optional	50	25	25	20	20	20
	Resistor power (W)	Optional	Optional	50	80	80	100	100	100
	Min resistance of external resistor (Ω)	40	40	40	20	15	20	20	20
	Max. Braking Energy Absorbed by the Capacitor (J)	9.3	18.59	32.42	32.42	47.68	78.19	114.43	114.43
	Braking resistor	All models in the series support built-in and external braking resistors. But Size A does not come with a built-in braking resistor as standard					Built-in and external resistor is supported		
Cooling method		Self-cooling		Air cooling					
Overvoltage class		III							

Three-phase 380 V drive

Item		Size C		Size D		Size E		
Servo drive model SV670****I		T3R5	T5R4	T8R4	T012	T017	T021	T026
Drive Power (kW)		1.0	1.5	2.0	3.0	5.0	6.0	7.5
Max. applicable motor capacity (kW)		1.0	1.5	2.0	3.0	4.4	5.5	7.5
Power supply equipment capacity (kVA)		6.05	9.08	10.23	15.15	22.25	25.0	31.25
Continuous output current (Arms)		3.5	5.4	8.4	12.0	17.0	21.0	26.0
Max. output current (Arms)		11.0	14.0	20.0	30.0	42.5	52.5	65.0
Main circuit	Continuous input current (Arms)	2.4	3.6	5.6	8.0	12.0	16.0	21.0
	Main circuit power supply	3-phase 380 VAC–440 VAC, -10 to +10%, 50 Hz/60 Hz						
	Energy Loss (W)[1]	39.5	63.25	94.82	135.47	187.62	228.28	258.63
Control circuit	Control circuit power supply	Single-phase 380 VAC–440 VAC, -10 to +10%, 50 Hz/60 Hz						
	Energy Loss (W)[1]	16						
Braking resistor	Resistance (Ω)	100	100	50	50	35	35	35
	Resistor power (W)	80	80	80	80	100	100	100
	Min resistance of external resistor (Ω)	80	60	45	40	35	25	25
	Max. Braking Energy Absorbed by the Capacitor (J)	28.23	34.28	50.41	50.41	82.67	120.98	120.98
	Braking resistor	Built-in braking resistor						
Cooling method		Air cooling						
Overvoltage class		III						

Note

- [1] Main circuit energy loss refers to the energy loss under rated output current of the servo drive.
- Select the external regenerative resistor according to actual operating conditions.

2.2.2 Basic Specifications

Item				Description
Basic Specifications	Control mode			IGBT PWM control, sine wave current drive mode 220 V, 380 V: Single-phase/Three-phase full bridge rectification
	Encoder feedback			23-bit multi-turn absolute encoder, which can be used as an incremental encoder in absence of the battery
	Conditions for use	Operating/Storage temperature [1]		-5°C to 55°C (average load ratio not exceeding 80% in ambient temperatures between 45°C to 55°C) (non freezing)/ -40°C to 70°C
		Operating/Storage humidity		Below 90% RH (no condensation)
		Vibration resistance		Operation: • 5 Hz–8.4 Hz: 3.5 mm displacement • 8.4 Hz–200 Hz: 1g Product package: • 5 Hz–100 Hz：0.01g^2/Hz • 200 Hz: 0.001g^2/Hz • Grms = 1.14 g
		Impact resistance		19.6 m/s^2
		IP rating		IP20 Note: excluding terminals (IP00)
		Pollution degree		PD2
		Altitude		The maximum altitude is 2000 m. • For altitudes not higher than 1000 m, derating is not required • Derating is required for altitudes above 1000 m (derate 1% for every additional 100 m) • For altitudes above 2000 m, contact Inovance
Position control mode	Performance	Feedforward compensation		0% to 100.0% (resolution: 0.1%)
		Width of positioning completed		1 to 65535 in encoder unit (resolution: 1 encoder unit)
	Input signal	Pulse reference	Input pulse form	Three forms: direction+pulse, phase A + phase B quadrature pulse, CW/CCW pulse
			Input form	Differential input; open collector
			Input pulse frequency	Differential input: max speed = 4 Mpps, pulse width ⩾ 0.125 us Open collector: 200Kpps max., pulse width ⩾ 2.5 us
		Power supply for built-in open collector [4]		+24 V (built-in 2.4 kΩ resistor)
		Multi-position reference selection		Position 0 to position 15 selectable through DI signal combination (Other terminals can be assigned with this function.)
	Position output	Output mode		Phase A, phase B: differential output Phase Z: differential output or open collector output
		Frequency division ratio		Any frequency division

Item				Description
Speed torque control mode	Performance	Speed change ratio [2]	Load change ratio	Below 0.5% at 0–100% load (under rated speed)
			Voltage change ratio	0.5% at rated voltage ± 10% (under rated speed)
			Temperature change ratio	Below 0.5% at 25 ± 25°C (under rated speed).
		Speed control range		1:5000 (Under the rated torque load, the servo drive keeps running as long as the lower limit of the speed control range is not exceeded.)
		Frequency characteristics		2 kHz
		Torque control precision		±2%
		Soft startup time setting		0s to 60s (Acceleration and deceleration can be set separately.)
Input/ Output signal	Digital input (DI) signal	Digital output signal		8 DIs Max. frequency of DI1–DI6: 1 kHz, which may drop when the current limiting resistance is greater than 2.4 kΩ Hardware delay of DI7–DI8: < 1 ms (current limiting resistance is 2.4 kΩ) See the following for the DI function: S-ON, fault reset, gain switchover, command switchover, zero clamp, pulse inhibition, forward overtravel prevention, reverse overtravel prevention, forward [3] torque limit, reverse torque limit, forward jog, reverse jog, step enable, home switch, homing enable, and interrupt positioning
	Digital output signal	DI signal function assignment		5 DOs. With-load capacity: 50 mA; Voltage range: 5 V to 30 V See the following for the DO function: Servo ready, motor rotating, zero speed signal, speed reach, position reach, proximity signal, torque limit, speed limit, brake output, warning, servo fault, and fault code
	Analog input signal			AI1 voltage input: -10 V to +10 V; max. allowable voltage: ±12 V
	Analog output signal			AO1 voltage output range： -10 V to +10 V

Item			Description
Built-in functions	Overtravel (OT) limit		The servo drive stops immediately when P-OT or N-OT is active
	Electronic Gear Ratio		0.8388608 ≤ B/A ≤ 3355443.2
	Protective functions		Including protections against overcurrent, overvoltage, undervoltage, overload, main circuit detection error, heatsink overheat, power phase loss, overspeed, encoder error, CPU error, and parameter error
	LED display		Main circuit CHARGE indicator, 5-digit LED display
	Vibration Suppression		Four notches (including two adaptive notches) available, 50 Hz to 4000 Hz
	Usability functions		One-key parameter tuning, adaptive parameter tuning, speed observer, and model tracking
	Communication	Connection device	USB, RS485
		Communication protocol	Modbus, CANopen, CANlink
		1:N communication	Up to 32 for RS485
		Axis address setting	Based on parameter settings
		Function	Including status display, user parameter setting, monitored value display, fault tracing display, JOG and auto-tuning, and speed/torque reference signal observation
	Others		Gain tuning, alarm record, JOG

Note

- [1] Install the servo drive within the allowable ambient temperature range. When it is installed inside a control cabinet, the temperature inside the cabinet must also be within this range.
- [2] The speed change ratio is defined by the following formula: Speed change ratio = (No-load speed - Full-load speed) ÷ Rated speed x 100%.
- The voltage change and temperature change may result in amplifier deviation, which causes the calculated resistance value to change. Such change will be reflected by the speed change. Speed changes caused by the voltage change and the temperature change will be indicated respectively by a percentage to the rated speed.
- [3] Forward rotation: The motor rotates clockwise when seen from the load side.
- [4] The internal open collector power supply is not electrically insulated from the control circuit in the servo drive.

2.2.3 Dynamic Brake Characteristics

According to the motor model, initial speed and load inertia, the dynamic braking distance can be estimated. The approximate value of the dynamic braking distance can be calculated by the following formula. For the accurate value, please use the dynamic braking calculation function provided by our software.

Maximum braking distance s (turn) is:

$$s = \frac{V_0}{60}\left(t_e + (\tau_1 + \tau_2 V_0^2)\left(1 + \frac{J_L}{J_M}\right)\right)$$

The coefficient is as follows:

$$\tau_1 = \frac{2R_s J}{3p_n^2 \Psi_f^2} = \frac{10000\pi^2 R_s J}{9K_e^2}$$

$$\tau_2 = \frac{\pi^2 L_d^2 J}{4050 R_s \Psi_f^2} = \frac{100 L_d^2 \pi^4 P_n^2 J}{243 R_s K_e^2}$$

$$\Psi_f = \frac{\sqrt{6} K_e}{100 \pi P_n}$$

- V_0: Maximum feedback speed
- t_e: Dynamic brake program and relay delay
- J_L: Load moment of inertia
- J_M: Motor moment of inertia
- P_n: Number of motor pole pairs
- R_s: Stator resistance (Ω)
- L_q, L_d: q-axis inductance (mH), d-axis inductance (mH).

3 MS1 Motor Series

3.1 Product Information

3.1.1 Nameplate and model number of the servo drive

MS1 H4 - 75B 30C B A3 3 1 Z - S
① ② ③ ④ ⑤ ⑥ ⑦ ⑧ ⑨ ⑩

① **MS1 series servo motor**	④ **Rated speed (rpm)** One letter and two digits B: x 10 C: x 100 Example: 30C: 3,000 rpm	⑧ **Brake, Reducer and Oil Sealing** [1] 0: No oil seal and brake 1: With oil seal 2: With brake 4: With oil seal and brake
② **Inertia and Capacity** H1: low inertia, small capacity H2: low inertia, medium capacity H3: medium inertia, medium capacity H4: medium inertia, small capacity	⑤ **Voltage Class (V)** B: 220 D: 380	⑨ **Series** Z: Z series
③ **Rated Power (W)** One letter and two digits B: x 10 C: x 100 Example: 75B: 750 W	⑥ **Encoder type** One letter and one digit A3: 23-bit multi-turn absolute encoder ⑦ **Shaft Connection Mode** 3: Solid, with key and threaded hole	⑩ **Cable Connection and Cooling** Blank: terminal type, natural cooling -S[2]: flying leads type, natural cooling -S4: flying leads type motor S4

Note

- [1]: Oil seals are provided as standard for all motors except the 40-flange model.
- [2]:-S flying leads type only applies to 40/60/80-flange motors.

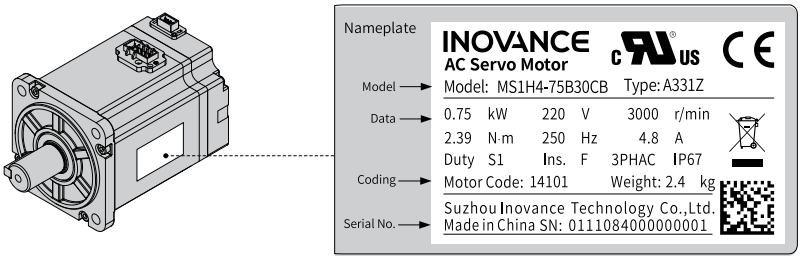

Figure 3-1 Nameplate and model number of the servo drive

Note

The SV660P series servo drive can work with a servo motor configured with a 23-bit single-turn or multi-turn absolute encoder.

3.1.2 Components of Servo Drives and Servo Motors

Servo Motors in Flange Sizes 40/60/80

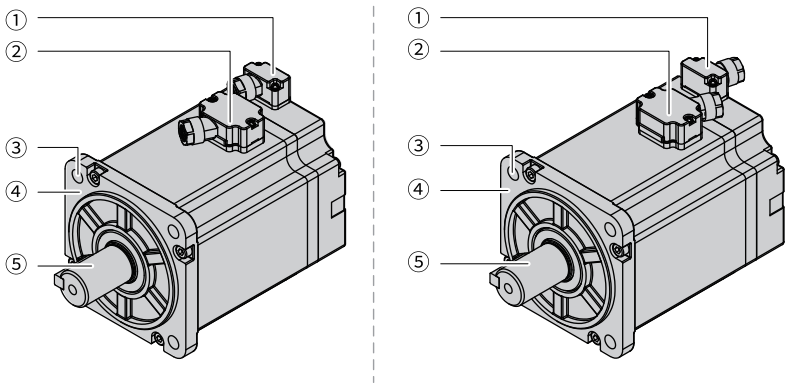

Figure 3-2 Components of terminal-type motors (Left: motor with front cable outlet; Right: motor with rear cable outlet)

Table 3–1 Components of terminal-type motors

No.	Name
①	Encoder connector
②	Power connector
③	Mounting screw through-hole
④	Mounting flange face
⑤	Shaft extension (keyed)

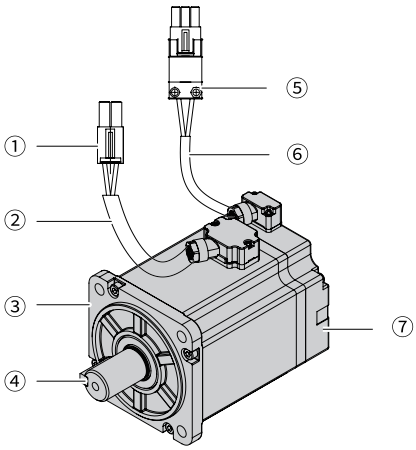

Figure 3-3 Components of flying leads type motors

Table 3–2 Components of flying leads type motors

No.	Name
①	Power cable connector
②	Power cable
③	Mounting flange face
④	Output shaft
⑤	Encoder connector
⑥	Encoder cable
⑦	Encoder (detection part)

Servo Motors in Flange Sizes 100/130/180

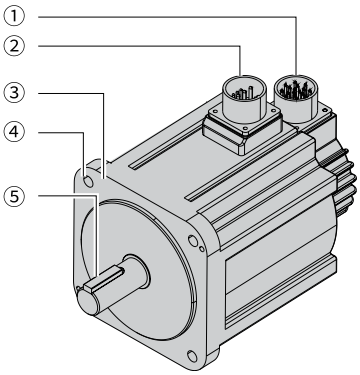

Figure 3-4 Components of servo drives in flange sizes 100/130/180

Table 3–3 Components of servo drives in flange sizes 100/130/180

No.	Name
①	Encoder connector
②	Power cable connector
③	Mounting flange face
④	Mounting screw through-hole
⑤	Shaft extension (keyed)

3.1.3 Motor Models

Motor		Rated Output Capacity (kW)	Rated speed (Max. Rated Speed) (RPM)	Encoder	IP rating
Low inertia, small capacity	MS1H1	0.05, 0.1, 0.2, 0.4, 0.55, 0.75, 1.0	3000 (6000)	A3: 23-bit multi-turn absolute encoder	IP67
Low inertia, medium capacity	MS1H2	1.0, 1.5, 2.0, 2.5, 3.0, 4.0, 5.0	3000 (6000/5000)	A3: 23-bit multi-turn absolute encoder	IP67
Medium inertia, medium capacity	MS1H3	0.85, 1.3, 1.8, 2.9, 4.4, 5.5, 7.5	1500 (3000)	A3: 23-bit multi-turn absolute encoder	IP67
Medium inertia, small capacity	MS1H4	0.1, 0.4, 0.75	3000 (6000)	A3: 23-bit multi-turn absolute encoder	IP67

3.2 General Specifications

3.2.1 Mechanical characteristics

Item	Description
Duty type	S1(Continuous working)
Vibration level[1]	V15
Insulation resistance	500VDC, above 10 MΩ
Excitation mode	Permanent magnetic
Installation Mode	Flange
Heat resistance level	F
Insulation voltage	1500 VAC, 1 minute (class 220 V) 1800 VAC, 1 minute (class 380 V)
IP rating of the enclosure	IP67 (excluding shaft opening and flying leads type motor connectors)

Item		Description
Direction of rotation		Rotates counterclockwise when viewed from the shaft extension side with the forward run command. 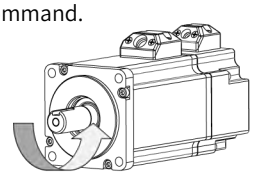
Environment conditions	Ambient temperature	0°C to 40°C (non-freezing) (Derate based on the derating curve for temperatures above 40°C.)
	Ambient humidity	20%–80% (no condensation)
	Installation location	• Free from corrosive or explosive gases • Well ventilated and with minimum amount of dust, waste and moisture. • Convenient for inspection and cleanup. • Below 1000 m (derating required for altitudes above 1000 m) • See the *"3.2.3 Derating Characteristics" on page 29motor derating curve* for details. • Away sources that may generate strong magnetic field • Away from heating sources such as a heating stove • Use the motor with oil seal in places with grinding fluid, oil mist, iron powders or cuttings.
	Storage	Observe the following requirements for storage of a de-energized motor: • Temperature: -20°C to +60°C (non-freezing) • Humidity: 20% to 80% RH (no condensation)
Impact resistance [2]	Impact acceleration (flange face as standard)	490m/s ^{2}
	Times of impact	2
Vibration resistance[3]	Vibration acceleration (flange face as standard)	49m/s ^{2}

Note

- [1] Vibration grade V15 indicates that the amplitude of vibration is less than 15 μ m when a single servo motor rotates at its rated value.
- [2] For a motor shaft mounted horizontally, the impact resistance level in the up and down directions is shown in the preceding table.
- [3] For a servo motor shaft mounted horizontally, the vibration resistance level in the up/down, left/right, and front/rear directions is shown in the preceding table.
- The vibration intensity applied to the motor varies with applications.

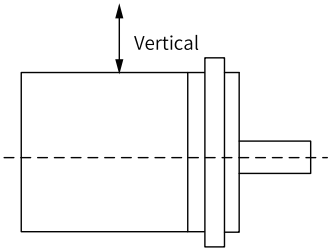

Figure 3-5 Impact applied on the motor

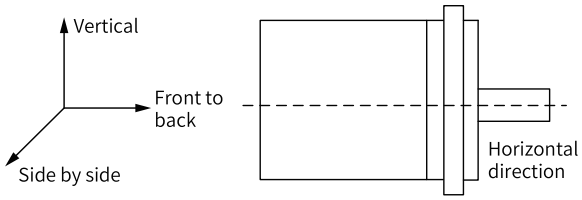

Figure 3-6 Vibration present on the motor

3.2.2 Overload Characteristics

The equipment is compliant with NEC and CEC requirements and equipped with protective functions against overload and overtemperature.

To protect motors with different loads, set motor overload protection gain based on the overload capacity of the motor. Use the default gains in general conditions, however, when one of the following condition occurs, change the gains based on the temperature rise condition of the motor:

- The motor operates in environments with high temperature.
- The motor is in cyclic motion featuring a short motion cycle and frequent acceleration/ deceleration.

Motor overload protection is shown by the following inverse time curve.

Load Ratio (%)	Operating time (s)
120	230
130	80
140	40
150	30
160	20
170	17
180	15
190	12
200	10
210	8.5
220	7
230	6
240	5.5
250	5
300	3
350	2

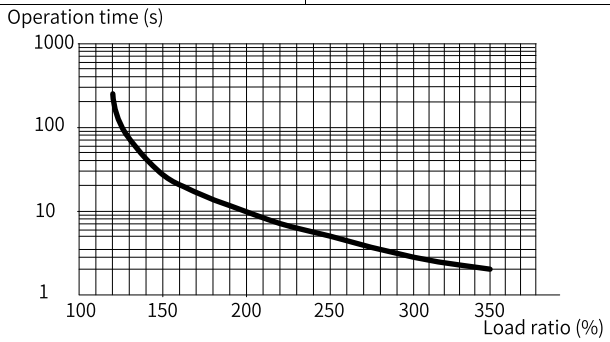

Figure 3-7 Motor overload curve

Note

- The maximum torque of MS1H4 models is 3.5 times the rated torque.
- Except for the 2.9 kW model, the maximum torque of MS1H3 is 2.5 times the rated torque.
- For 2.9 kW, the maximum torque is 2 times the rated torque.

3.2.3 Derating Characteristics

- **Altitude-based derating curve**

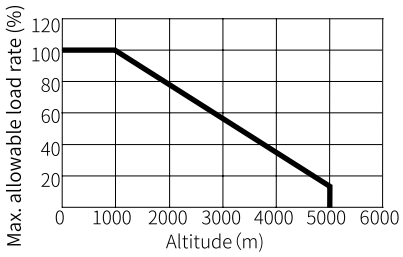

- **Temperature-based derating curve**

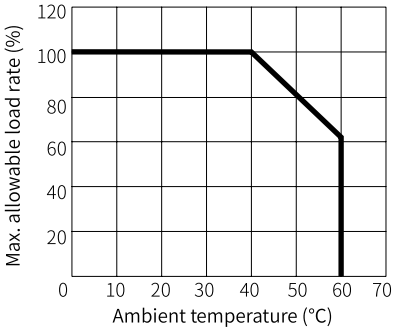

3.2.4 Temperature curve of the oil sealing

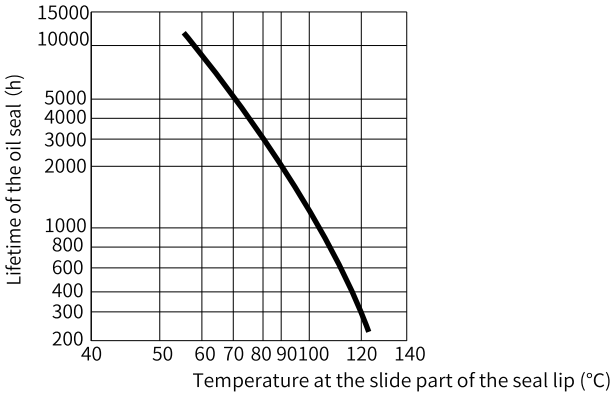

3.2.5 Load moment of inertia

The load moment of inertia represents the inertia of the load. The larger the load moment of inertia is, the weaker the responsiveness is. An excessively high inertia may result in unstable motion. The

allowable load moment of inertia () of the motor is restricted. This value is provided strictly as a guideline and results depend on the motor driving conditions.

An overvoltage warning may occur during deceleration if the load moment of inertia exceeds the allowable value. For servo drives with a built-in regenerative resistor, an overload alarm my be present. In case of such warnings, take one of the following measures：

- Reduce the torque limit values.
- Reduce the deceleration rate.
- Reduce the maximum speed.
- Install an external braking resistor if the warning cannot be cleared using the above measures.

Caution

- Regenerative resistors are not built into servo drives under 400 W.
- Even for servo drives with built-in regenerative resistors, an external regenerative resistor is required if the energy that results from the regenerative driving conditions exceeds the allowable loss capacity (W) of the built-in regenerative resistor.

3.2.6 Ratio Characteristics for Allowable Load Moment of Inertia of Servo Unit Without Built-in Regenerative Resistor

The following diagrams show the allowable load moment of inertia scaling factor of the motor speed for servo units without built-in regenerative resistor when an external regenerative resistor is not connected. If the servo motor exceeds the allowable load moment of inertia, an overvoltage warning may occur in the servo unit.

The following figure provides reference data for deceleration at the rated torque or higher under 200 VAC input.

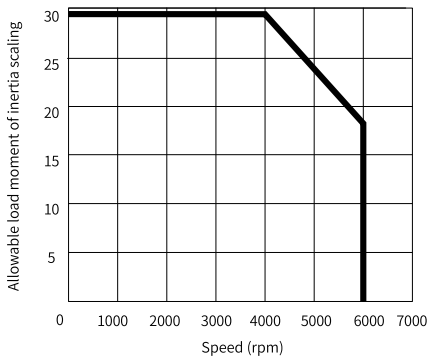

3.3 Selection Precautions

- The motor with oil seal must be derated by 10% during use.
- The brake cannot share the same power supply with other electrical devices. This is to prevent malfunction of the brake due to voltage or current drop caused by other working devices.
- Use cables with a cross-sectional area above 0.5 mm^2.

- Technical data and torque/speed characteristic values in the following tables are applicable to motors working with Inovance servo drives with the the armature coil temperature being 20°C.
- The characteristic parameter values are obtained in cases where the motor is installed with the following heatsink:
  - MS1H1/MS1H4: 250 × 250 × 6 (mm) (aluminum)
  - MS1H2-10C to 25C: 300 × 300 × 12 (mm) (aluminum)
  - MS1H2-30C to 50C: 400 × 400 × 20 (mm) (aluminum)
  - MS1H3-85B to 18C: 400 × 400 × 20 (mm) (iron)
  - MS1H3-29C to 75C: 360 × 360 × 25 (mm) (2-layer aluminum)
- Radial and axial loads of the motor

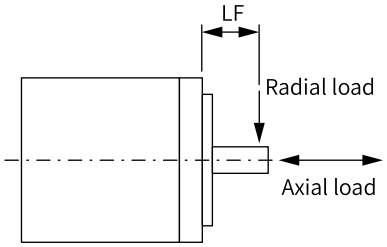

Figure 3-8 Radial and axial loads of the motor

- The tightening tension for terminal screws must be between 0.19 N·m to 0.21 N·m, exceeding of which may damage the terminal.
- Dimensions in the following dimension drawings are in millimeters (mm).
  Values inside brackets "()" are of the motor with a holding brake.
- Motor model ending with "-S4" represents the duty type S4, indicating the motor is working under S4 duty, with the motor load ratio not exceeding 70%.
- The 40/60/80-flange flying leads type motor (with “-S”) provides a drain wire of about 300 mm long, as shown in the following figure.

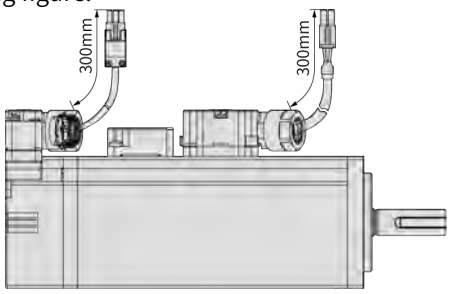

3.4 Motor with Low Inertia and Small Capacity (MS1H1)

3.4.1 MS1H1-05B30CB-A33*Z(-S)

3.4.1.1

Motor Model		
Flange Size (mm)	40	
Inertia, Capacity	Low inertia, small capacity	
Rated Power (kW)	0.05	
Rated Voltage	220	
Rated torque (N·m)	0.16	
Maximum torque (N·m)	0.56	
Rated Current (Arms)	1.3	
Maximum Current (Arms)	4.70	
Rated speed (RPM)	3000	
Maximum speed (RPM)	6000	
Torque coefficient (N·m/Arms)	0.15	
Rotor moment of inertia (kg·cm^2)	Motor without brake	0.026
	Motor with brake	0.028

Torque-Speed characteristics

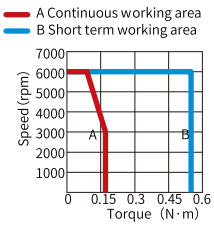

Heatsink-based derating curve

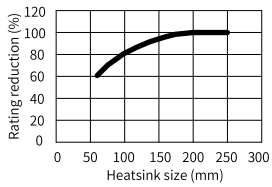

Electrical specifications of the motor with brake

Holding Torque (N·m)	Supply Voltage (VDC) ±10%	Rated power (W)	Coil Resistance (Ω)(±7%)	Exciting Current (A)	Apply Time (ms)	Release Time (ms)	Backlash (°)
0.32	24	6.1	94.4	0.25	⩽ 40	⩽ 20	⩽ 1.5

Allowable load

LF (mm)	Allowable Radial Load (N)	Allowed Axial Load (N)
20	78	54

Product dimensions (unit: mm)

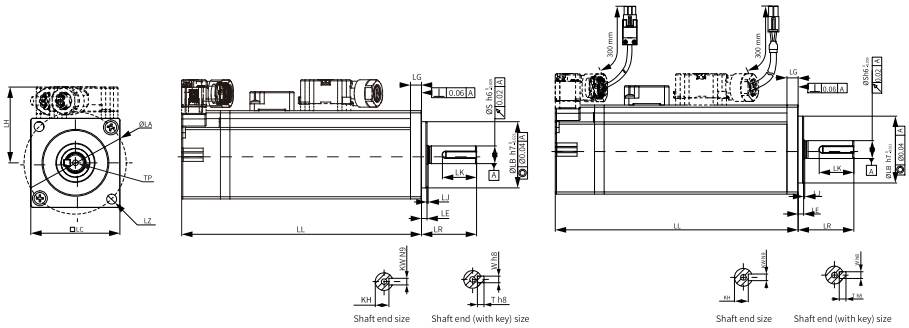

LL	LC	LR	LA	LZ	LH	LG	LE	LJ
65 (96)	40	25±0.5	46	2-Ø4.5	34	5	2.5±0.5	0.5±0.35
S	LB	TP	LK	KH	KW	W	T	Weight (kg)
8	30	M3x6	15.5	6.2- ^{0}0.1	3	3	3	0.39 (0.50)

3.4.2 MS1H1-10B30CB-A33*Z(-S)

3.4.2.1

Motor Model			Torque-Speed characteristics
Flange Size (mm)	40		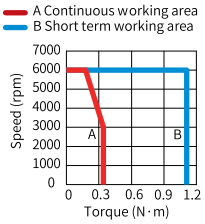
Inertia, Capacity	Low inertia, small capacity		
Rated Power (kW)	0.1		
Rated Voltage	220		
Rated torque (N·m)	0.32		
Maximum torque (N·m)	1.12		
Rated Current (Arms)	1.3		Heatsink-based derating curve
Maximum Current (Arms)	4.70		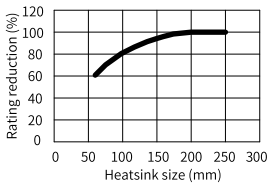
Rated speed (RPM)	3000		
Maximum speed (RPM)	6000		
Torque coefficient (N·m/Arms)	0.26		
Rotor moment of inertia (kg·cm^2)	Motor without brake	0.041	
	Motor with brake	0.043	

Electrical specifications of the motor with brake

Holding Torque (N·m)	Supply Voltage (VDC) ±10%	Rated power (W)	Coil Resistance (Ω)(±7%)	Exciting Current (A)	Apply Time (ms)	Release Time (ms)	Backlash (°)
0.32	24	6.1	94.4	0.25	⩽ 40	⩽ 20	⩽ 1.5

Allowable load

LF (mm)	Allowable Radial Load (N)	Allowed Axial Load (N)
20	78	54

Product dimensions (unit: mm)

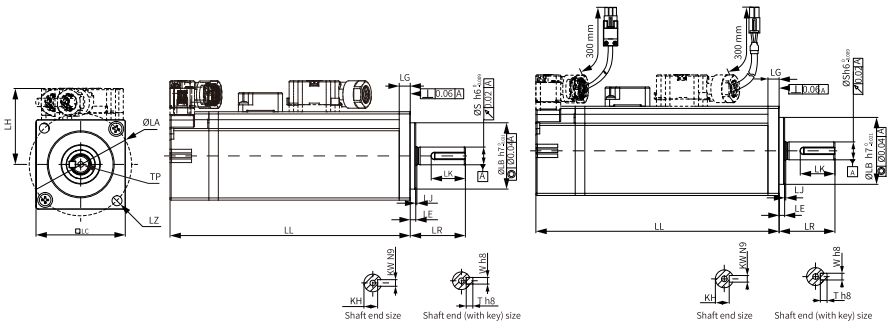

LL	LC	LR	LA	LZ	LH	LG	LE	LJ
77.5 (109)	40	25±0.5	46	2-Ø4.5	34	5	2.5±0.5	0.5±0.35
S	LB	TP	LK	KH	KW	W	T	Weight (kg)
8	30	M3x6	15.5	6.2- ^{0}0.1	3	3	3	0.45 (0.64)

3.4.3 MS1H1-20B30CB-A33*Z(-S)

3.4.3.1

Motor Model			Torque-Speed characteristics
Flange Size (mm)	60		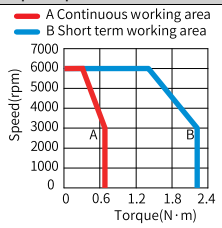
Inertia, Capacity	Low inertia, small capacity		
Rated Power (kW)	0.2		
Rated Voltage	220		
Rated torque (N·m)	0.64		
Maximum torque (N·m)	2.24		
Rated Current (Arms)	1.5		Heatsink-based derating curve
Maximum Current (Arms)	5.80		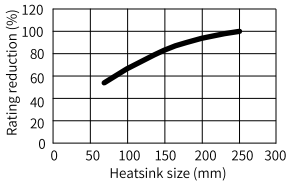
Rated speed (RPM)	3000		
Maximum speed (RPM)	6000		
Torque coefficient (N·m/Arms)	0.46		
Rotor moment of inertia (kg·cm^2)	Motor without brake	0.207	
	Motor with brake	0.22	

Electrical specifications of the motor with brake

Holding Torque (N·m)	Supply Voltage (VDC) ±10%	Rated power (W)	Coil Resistance (Ω)(±7%)	Exciting Current (A)	Apply Time (ms)	Release Time (ms)	Backlash (°)
1.5	24	7.6	75.79	0.32	⩽ 60	⩽ 20	⩽ 1.5

Allowable load

LF (mm)	Allowable Radial Load (N)	Allowed Axial Load (N)
25	245	74

Product dimensions (unit: mm)

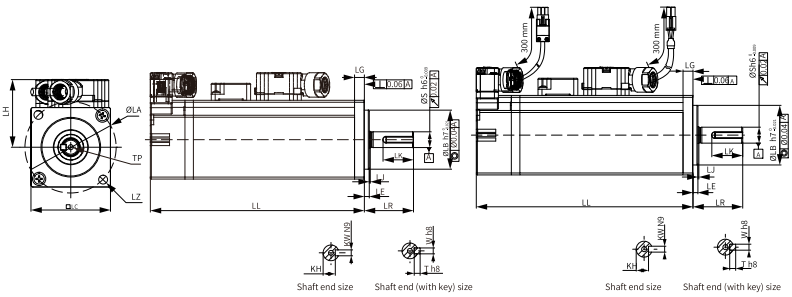

LL	LC	LR	LA	LZ	LH	LG	LE	LJ
72.5 (100)	60	30±0.5	70	4-Ø5.5	44	7.5	3±0.5	0.5±0.35
S	LB	TP	LK	KH	KW	W	T	Weight (kg)
14	50	M5x8	16.5	11- ^{0}0.1	5	5	5	0.78 (1.16)

3.4.4 MS1H1-40B30CB-A33*Z(-S)

3.4.4.1

Motor Model			Torque-Speed characteristics
Flange Size (mm)	60		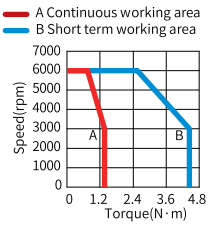
Inertia, Capacity	Low inertia, small capacity		
Rated Power (kW)	0.2		
Rated Voltage	220		
Rated torque (N·m)	1.27		
Maximum torque (N·m)	4.46		
Rated Current (Arms)	2.8		Heatsink-based derating curve
Maximum Current (Arms)	10.1		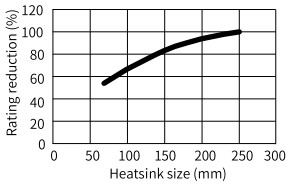
Rated speed (RPM)	3000		
Maximum speed (RPM)	6000		
Torque coefficient (N·m/Arms)	0.53		
Rotor moment of inertia (kg·cm^2)	Motor without brake	0.376	
	Motor with brake	0.39	

Electrical specifications of the motor with brake

Holding Torque (N·m)	Supply Voltage (VDC) ±10%	Rated power (W)	Coil Resistance (Ω)(±7%)	Exciting Current (A)	Apply Time (ms)	Release Time (ms)	Backlash (°)
1.5	24	7.6	75.79	0.32	⩽ 60	⩽ 20	⩽ 1.5

Allowable load

LF (mm)	Allowable Radial Load (N)	Allowed Axial Load (N)
25	245	74

Product dimensions (unit: mm)

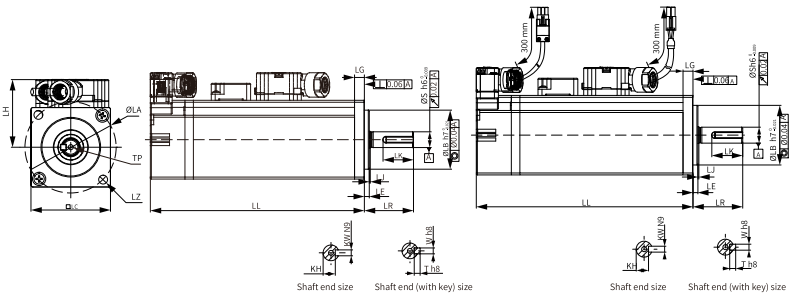

LL	LC	LR	LA	LZ	LH	LG	LE	LJ
91 (119)	60	30±0.5	70	4-Ø5.5	44	7.5	3±0.5	0.5±0.35
S	LB	TP	LK	KH	KW	W	T	Weight (kg)
14	50	M5x8	16.5	11- ^{0}0.1	5	5	5	1.11 (1.48)

3.4.5 MS1H1-55B30CB-A331Z(-S)

3.4.5.1

Motor Model		Torque-Speed characteristics
Flange Size (mm)	80	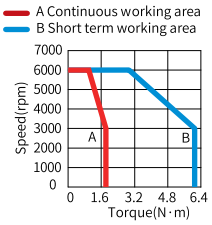
Inertia, Capacity	Low inertia, small capacity	
Rated Power (kW)	0.55	
Rated Voltage	220	
Rated torque (N·m)	1.75	
Maximum torque (N·m)	6.13	
Rated Current (Arms)	3.8	Heatsink-based derating curve
Maximum Current (Arms)	15	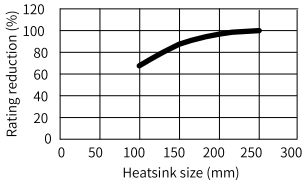
Rated speed (RPM)	3000	
Maximum speed (RPM)	6000	
Torque coefficient (N·m/Arms)	0.49	
Rotor moment of inertia (kg·cm^2)	1.06	

Allowable load

LF (mm)	Allowable Radial Load (N)	Allowed Axial Load (N)
35	392	147

Product dimensions (unit: mm)

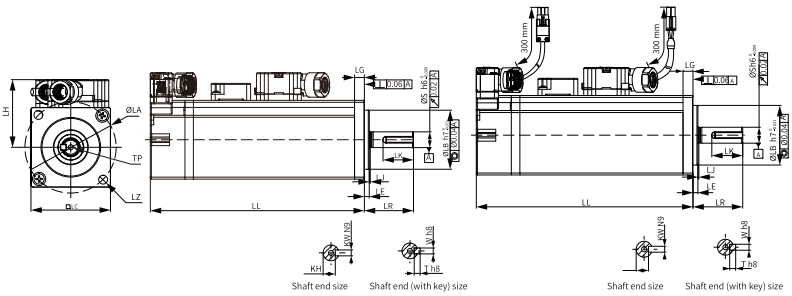

LL	LC	LR	LA	LZ	LH	LG	LE	LJ
96.2	80	35±0.5	90	4-Ø7	54	7.7	3±0.5	0.5±0.35
S	LB	TP	LK	KH	KW	W	T	Weight (kg)
19	70	M6×20	25	15.5- ^{0}0.1	6	6	6	1.85

3.4.6 MS1H1-75B30CB-A33*Z(-S)

3.4.6.1

Motor Model			Torque-Speed characteristics
Flange Size (mm)	80		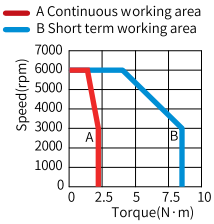
Inertia, Capacity	Low inertia, small capacity		
Rated Power (kW)	0.75		
Rated Voltage	220		
Rated torque (N·m)	2.39		
Maximum torque (N·m)	8.36		
Rated Current (Arms)	4.8		Heatsink-based derating curve
Maximum Current (Arms)	16.9		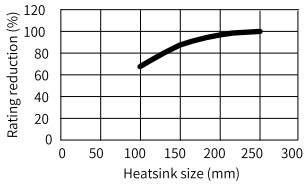
Rated speed (RPM)	3000		
Maximum speed (RPM)	6000		
Torque coefficient (N·m/Arms)	0.58		
Rotor moment of inertia (kg·cm^2)	Motor without brake	1.38	
	Motor with brake	1.43	

Electrical specifications of the motor with brake

Holding Torque (N·m)	Supply Voltage (VDC) ±10%	Rated power (W)	Coil Resistance (Ω)(±7%)	Exciting Current (A)	Apply Time (ms)	Release Time (ms)	Backlash (°)
3.2	24	10	57.6	0.42	⩽ 60	⩽ 40	⩽ 1

Allowable load

LF (mm)	Allowable Radial Load (N)	Allowed Axial Load (N)
35	392	147

Product dimensions (unit: mm)

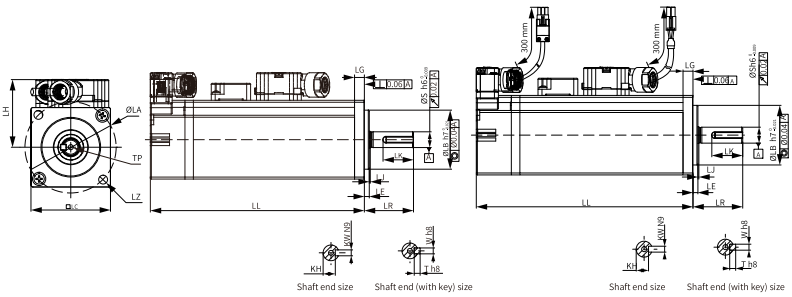

LL	LC	LR	LA	LZ	LH	LG	LE	LJ
107 (140)	80	35±0.5	90	4-Ø7	54	7.7	3±0.5	0.5±0.35
S	LB	TP	LK	KH	KW	W	T	Weight (kg)
19	70	M6×20	25	15.5- ^{0}0.1	6	6	6	2.18 (2.82)

3.4.7 MS1H1-10C30CB-A331Z(-S)

3.4.7.1

Motor Model			Torque-Speed characteristics
Flange Size (mm)	80		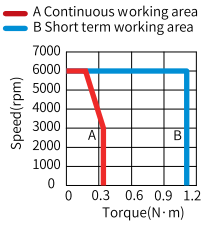
Inertia, Capacity	Low inertia, small capacity		
Rated Power (kW)	1.0		
Rated Voltage	220		
Rated torque (N·m)	3.18		
Maximum torque (N·m)	11.1		
Rated Current (Arms)	7.6		Heatsink-based derating curve
Maximum Current (Arms)	28		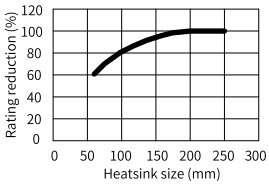
Rated speed (RPM)	3000		
Maximum speed (RPM)	6000		
Torque coefficient (N·m/Arms)	0.46		
Rotor moment of inertia (kg·cm^2)	Motor without brake	1.75	
	Motor with brake	1.86	

Electrical specifications of the motor with brake

Holding Torque (N·m)	Supply Voltage (VDC) ±10%	Rated power (W)	Coil Resistance (Ω)(±7%)	Exciting Current (A)	Apply Time (ms)	Release Time (ms)	Backlash (°)
3.2	24	10	57.6	0.42	⩽ 60	⩽ 40	⩽ 1

Allowable load

LF (mm)	Allowable Radial Load (N)	Allowed Axial Load (N)
35	392	147

Product dimensions (unit: mm)

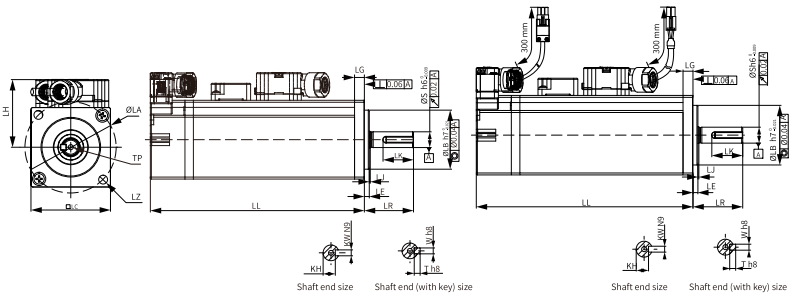

LL	LC	LR	LA	LZ	LH	LG	LE	LJ
118.2	80	35±0.5	90	4-Ø7	54	7.7	3±0.5	0.5±0.35
S	LB	TP	LK	KH	KW	W	T	Weight (kg)
19	70	M6×20	25	15.5- ^{0}0.1	6	6	6	2.55

3.5 Motor with Low Inertia and Medium Capacity (MS1H2)

3.5.1 MS1H2-10C30CB-A33*Z

3.5.1.1

Motor Model			Torque-Speed characteristics
Flange Size (mm)	100		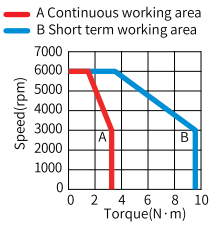
Inertia, Capacity	Low inertia, medium capacity		
Rated Power (kW)	1.0		
Rated Voltage	220		
Rated torque (N·m)	3.18		
Maximum torque (N·m)	9.54		
Rated Current (Arms)	7.5		Heatsink-based derating curve
Maximum Current (Arms)	23		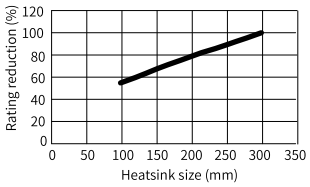
Rated speed (RPM)	3000		
Maximum speed (RPM)	6000		
Torque coefficient (N·m/Arms)	0.47		
Rotor moment of inertia (kg·cm^2)	Motor without brake	1.87	
	Motor with brake	3.12	

Electrical specifications of the motor with brake

Holding Torque (N·m)	Supply Voltage (VDC) ±10%	Rated power (W)	Coil Resistance (Ω)(±7%)	Exciting Current (A)	Apply Time (ms)	Release Time (ms)	Backlash (°)
8	24	23	25	0.96	⩽ 85	⩽ 30	⩽ 0.5

Allowable load

LF (mm)	Allowable Radial Load (N)	Allowed Axial Load (N)
45	686	196

Product dimensions (unit: mm)

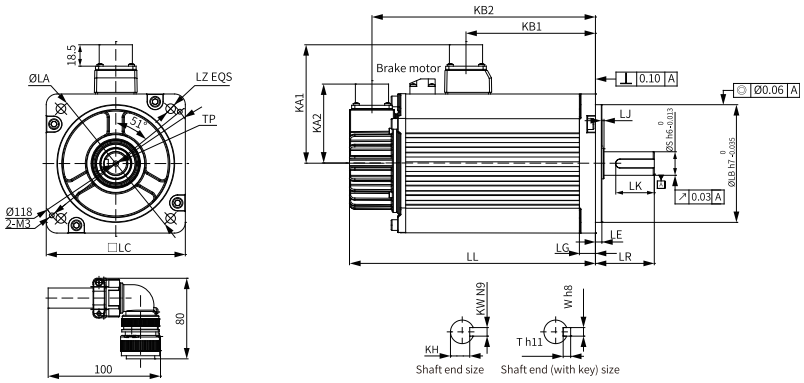

LL	LC	LE	LA	LZ	KA1	KA2	LJ		KB1	KB2	
164 (213.5)	100	5±0.3	115	4-Ø7	88	74	2.5±0.75		94.5 (101)	143.5 (192.5)	
LR		S	LB	TP	LK	KH	KW	W	T	LG	Weight (kg)
45±1		24	95	M8×16	36	$20^{0}_{-0.2}$	8	8	7	10	5.11 (6.41)

3.5.2 MS1H2-10C30CD-A33*Z

3.5.2.1

Motor Model			Torque-Speed characteristics
Flange Size (mm)	100		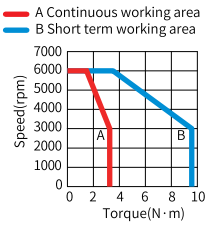
Inertia, Capacity	Low inertia, medium capacity		
Rated Power (kW)	1		
Rated Voltage	380		
Rated torque (N·m)	3.18		
Maximum torque (N·m)	9.54		
Rated Current (Arms)	3.65		Heatsink-based derating curve
Maximum Current (Arms)	11		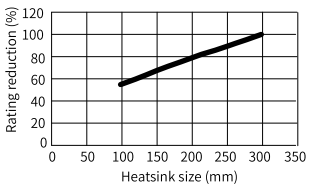
Rated speed (RPM)	3000		
Maximum speed (RPM)	6000		
Torque coefficient (N·m/Arms)	0.89		
Rotor moment of inertia (kg·cm²)	Motor without brake	1.87	
	Motor with brake	3.12	

Electrical specifications of the motor with brake

Holding Torque (N·m)	Supply Voltage (VDC) ±10%	Rated power (W)	Coil Resistance (Ω)(±7%)	Exciting Current (A)	Apply Time (ms)	Release Time (ms)	Backlash (°)
8	24	23	25	0.96	⩽ 85	⩽ 30	⩽ 0.5

Allowable load

LF (mm)	Allowable Radial Load (N)	Allowed Axial Load (N)
45	686	196

Product dimensions (unit: mm)

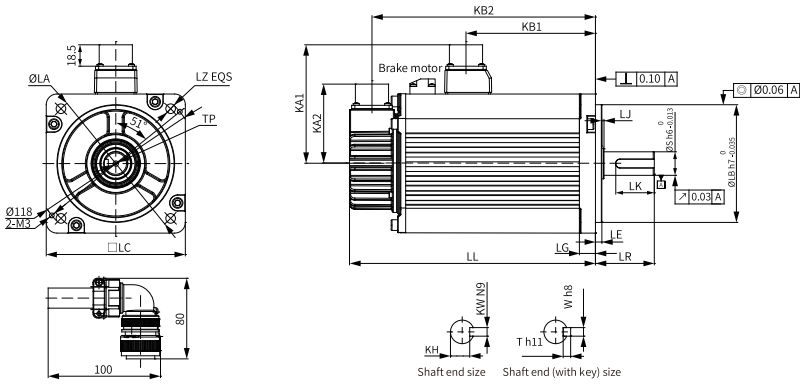

LL	LC	LE	LA	LZ	KA1	KA2	LJ	KB1	KB2
164 (213.5)	100	5±0.3	115	4-Ø7	88	74	2.5±0.75	94.5 (101)	143.5 (192.5)

LR	S	LB	TP	LK	KH	KW	W	T	LG	Weight (kg)
45±1	24	95	M8×16	36	$20^{0}_{-0.2}$	8	8	7	10	5.11 (6.41)

3.5.3 MS1H2-15C30CB-A33*Z

3.5.3.1

Motor Model		
Flange Size (mm)	100	
Inertia, Capacity	Low inertia, medium capacity	
Rated Power (kW)	1.5	
Rated Voltage	220	
Rated torque (N·m)	4.9	
Maximum torque (N·m)	14.7	
Rated Current (Arms)	10.8	
Maximum Current (Arms)	32	
Rated speed (RPM)	3000	
Maximum speed (RPM)	5000	
Torque coefficient (N·m/Arms)	0.54	
Rotor moment of inertia (kg·cm^2)	Motor without brake	2.46
	Motor with brake	3.71

Torque-Speed characteristics

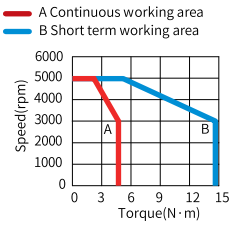

Heatsink-based derating curve

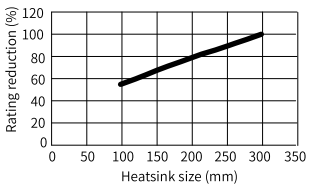

Electrical specifications of the motor with brake

Holding Torque (N·m)	Supply Voltage (VDC) ±10%	Rated power (W)	Coil Resistance (Ω)(±7%)	Exciting Current (A)	Apply Time (ms)	Release Time (ms)	Backlash (°)
8	24	23	25	0.96	⩽ 85	⩽ 30	⩽ 0.5

Allowable load

LF (mm)	Allowable Radial Load (N)	Allowed Axial Load (N)
45	686	196

Product dimensions (unit: mm)

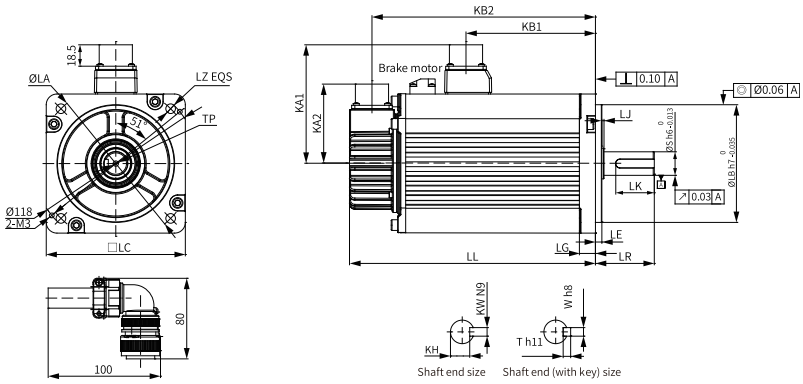

LL	LC	LE	LA	LZ	KA1	KA2	LJ	KB1	KB2
189 (239)	100	5±0.3	115	4-Ø7	88	74	2.5±0.75	119.5 (128)	168.5 (219.5)

LR	S	LB	TP	LK	KH	KW	W	T	LG	Weight (kg)
45±1	24	95	M8×16	36	$20^{0}_{-0.2}$	8	8	7	10	6.22 (7.52)

3.5.4 MS1H2-15C30CD-A33*Z

3.5.4.1

Motor Model		
Flange Size (mm)	100	
Inertia, Capacity	Low inertia, medium capacity	
Rated Power (kW)	1.5	
Rated Voltage	380	
Rated torque (N·m)	4.9	
Maximum torque (N·m)	14.7	
Rated Current (Arms)	4.5	
Maximum Current (Arms)	14	
Rated speed (RPM)	3000	
Maximum speed (RPM)	5000	
Torque coefficient (N·m/Arms)	1.07	
Rotor moment of inertia (kg·cm²)	Motor without brake	2.46
	Motor with brake	3.71

Torque-Speed characteristics

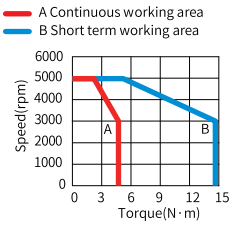

Heatsink-based derating curve

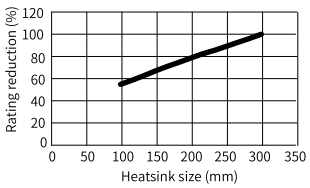

Electrical specifications of the motor with brake

Holding Torque (N·m)	Supply Voltage (VDC) ±10%	Rated power (W)	Coil Resistance (Ω)(±7%)	Exciting Current (A)	Apply Time (ms)	Release Time (ms)	Backlash (°)
8	24	23	25	0.96	⩽ 85	⩽ 30	⩽ 0.5

Allowable load

LF (mm)	Allowable Radial Load (N)	Allowed Axial Load (N)
45	686	196

Product dimensions (unit: mm)

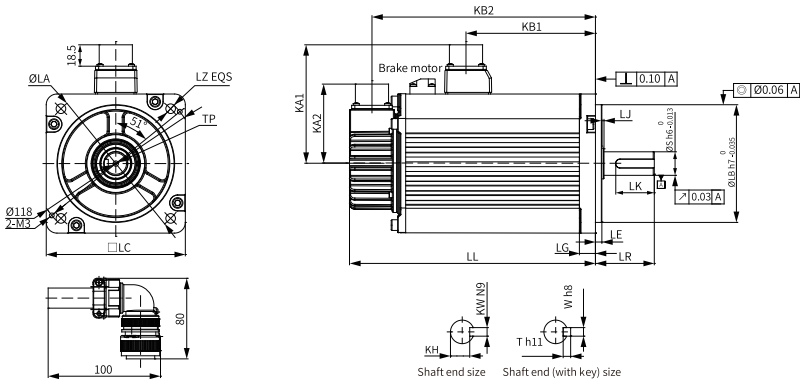

LL	LC	LE	LA	LZ	KA1	KA2	LJ		KB1	KB2	
189 (239)	100	5±0.3	115	4-Ø7	88	74	2.5±0.75		119.5 (128)	168.5 (219.5)	
LR		S	LB	TP	LK	KH	KW	W	T	LG	Weight (kg)
45±1		24	95	M8×16	36	$20^{0}_{-0.2}$	8	8	7	10	6.22 (7.52)

3.5.5 MS1H2-20C30CD-A331Z

3.5.5.1

Motor Model		Torque-Speed characteristics
Flange Size (mm)	100	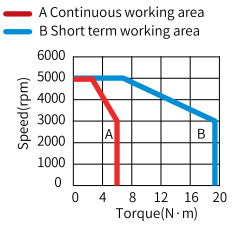
Inertia, Capacity	Low inertia, medium capacity	
Rated Power (kW)	2	
Rated Voltage	380	
Rated torque (N·m)	6.36	
Maximum torque (N·m)	19.1	
Rated Current (Arms)	5.89	Heatsink-based derating curve
Maximum Current (Arms)	20	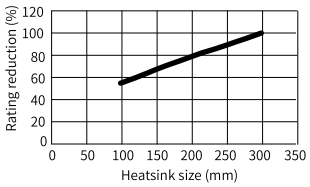
Rated speed (RPM)	3000	
Maximum speed (RPM)	5000	
Torque coefficient (N·m/Arms)	1.19	
Rotor moment of inertia (kg·cm^2)	3.06	

Allowable load

LF (mm)	Allowable Radial Load (N)	Allowed Axial Load (N)
45	686	196

Product dimensions (unit: mm)

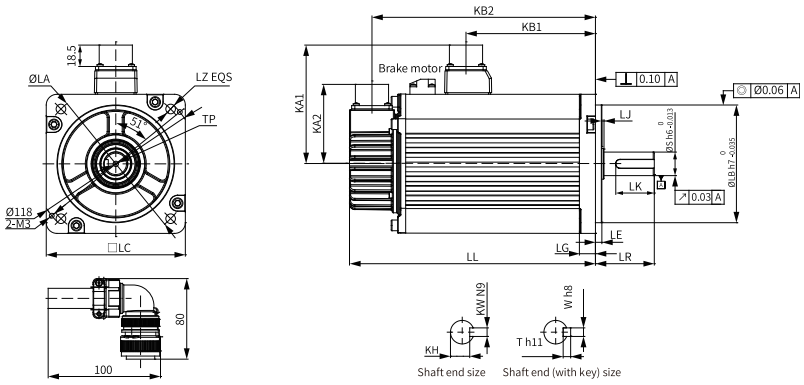

LL	LC	LE	LA	LZ	KA1	KA2	LJ		KB1	KB2	
214	100	5±0.3	115	4-Ø7	88	74	2.5±0.75		144.5	193.5	
LR		S	LB	TP	LK	KH	KW	W	T	LG	Weight (kg)
45±1		24	95	M8×16	36	$20^{0}_{-0.2}$	8	8	7	10	7.39

3.5.6 MS1H2-20C30CD-A334Z-S4

3.5.6.1

Motor Model		Torque-Speed characteristics
Flange Size (mm)	100	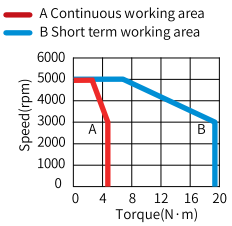
Inertia, Capacity	Low inertia, medium capacity	
Rated Power (kW)	2	
Rated Voltage	380	
Rated torque (N·m)	6.36	
Maximum torque (N·m)	19.1	
Rated Current (Arms)	5.89	Heatsink-based derating curve
Maximum Current (Arms)	20	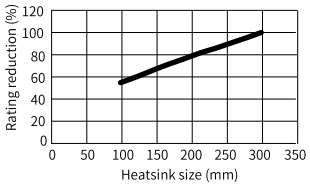
Rated speed (RPM)	3000	
Maximum speed (RPM)	5000	
Torque coefficient (N·m/Arms)	1.19	
Rotor moment of inertia (kg·cm^2)	4.31	

Electrical specifications of the motor with brake

Holding Torque (N·m)	Supply Voltage (VDC) ±10%	Rated power (W)	Coil Resistance (Ω)(±7%)	Exciting Current (A)	Apply Time (ms)	Release Time (ms)	Backlash (°)
8	24	23	25	0.96	⩽ 85	⩽ 30	⩽ 0.5

Allowable load

LF (mm)	Allowable Radial Load (N)	Allowed Axial Load (N)
45	686	196

Product dimensions (unit: mm)

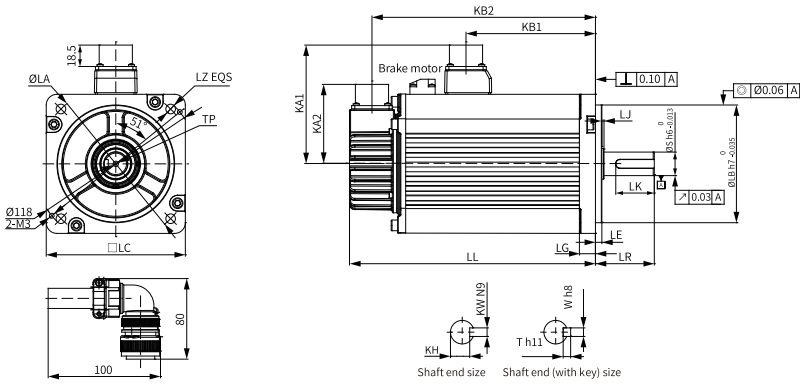

LL	LC	LE	LA	LZ	KA1	KA2	KW	LG	KB1	KB2	
265	100	5±0.3	115	4-Ø7	88	74	8	10	153	244	
LR		S	LB	TP	LK	KH	LJ		W	T	Weight (kg)
45±1		24	95	M8×16	36	$20^{0}_{-0.2}$	2.5±0.75		8	7	8.7

3.5.7 MS1H2-25C30CD-A331Z

3.5.7.1

Motor Model		Torque-Speed characteristics
Flange Size (mm)	100	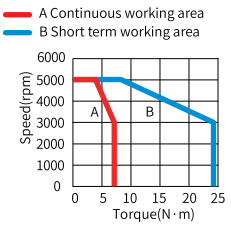
Inertia, Capacity	Low inertia, medium capacity	
Rated Power (kW)	2.5	
Rated Voltage	380	
Rated torque (N·m)	7.96	
Maximum torque (N·m)	23.9	
Rated Current (Arms)	7.56	**Heatsink-based derating curve**
Maximum Current (Arms)	25	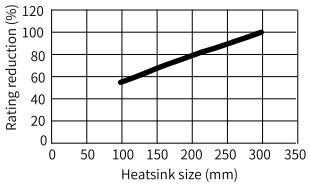
Rated speed (RPM)	3000	
Maximum speed (RPM)	5000	
Torque coefficient (N·m/Arms)	1.2	
Rotor moment of inertia (kg·cm^2)	3.65	

Allowable load

LF (mm)	Allowable Radial Load (N)	Allowed Axial Load (N)
45	686	196

Product dimensions (unit: mm)

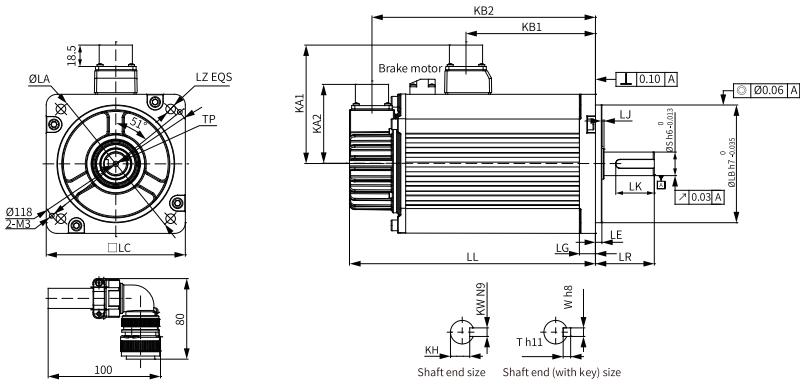

LL	LC	LE	LA	LZ	KA1	KA2	KW	LG	KB1	KB2
240.5	100	5±0.3	115	4-Ø7	88	74	8	10	169.5	218.5

LR	S	LB	TP	LK	KH	LJ	W	T	Weight (kg)
45±1	24	95	M8×16	36	$20^{0}_{-0.2}$	2.5±0.75	8	7	8.55

3.5.8 MS1H2-25C30CD-A334Z-S4

3.5.8.1

Motor Model	
Flange Size (mm)	100
Inertia, Capacity	Low inertia, medium capacity
Rated Power (kW)	2.5
Rated Voltage	380
Rated torque (N·m)	7.96
Maximum torque (N·m)	23.9
Rated Current (Arms)	7.56
Maximum Current (Arms)	25
Rated speed (RPM)	3000
Maximum speed (RPM)	5000
Torque coefficient (N·m/Arms)	1.2
Rotor moment of inertia (kg·cm^2)	4.9

Torque-Speed characteristics

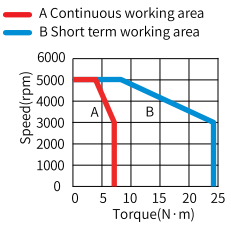

Heatsink-based derating curve

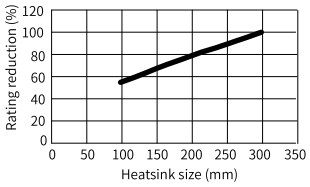

Electrical specifications of the motor with brake

Holding Torque (N·m)	Supply Voltage (VDC) ±10%	Rated power (W)	Coil Resistance (Ω)(±7%)	Exciting Current (A)	Apply Time (ms)	Release Time (ms)	Backlash (°)
8	24	23	25	0.96	⩽ 85	⩽ 30	⩽ 0.5

Allowable load

LF (mm)	Allowable Radial Load (N)	Allowed Axial Load (N)
45	686	196

Product dimensions (unit: mm)

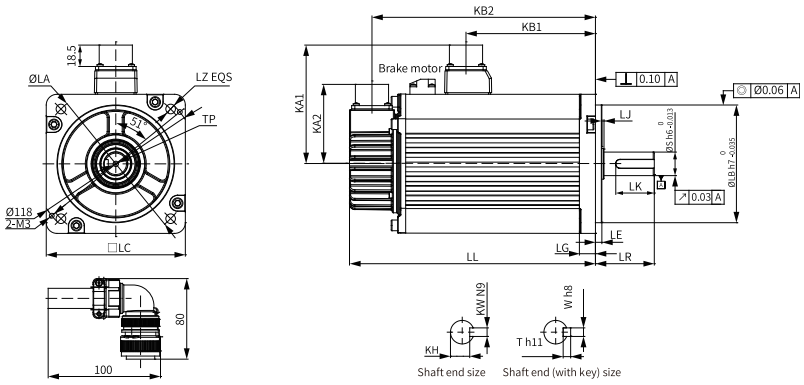

LL	LC	LE	LA	LZ	KA1	KA2	KW	LG	KB1	KB2	
290	100	5±0.3	115	4-Ø7	88	74	8	10	178	269	
LR		S	LB	TP	LK	KH	LJ		W	T	Weight (kg)
45±1		24	95	M8×16	36	$20^{0}_{-0.2}$	2.5±0.75		8	7	9.8

3.5.9 MS1H2-30C30CD-A331Z

3.5.9.1

Motor Model		Torque-Speed characteristics
Flange Size (mm)	130	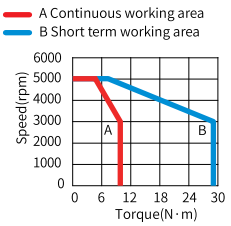
Inertia, Capacity	Low inertia, medium capacity	
Rated Power (kW)	3	
Rated Voltage	380	
Rated torque (N·m)	9.8	
Maximum torque (N·m)	29.4	
Rated Current (Arms)	10	Heatsink-based derating curve
Maximum Current (Arms)	30	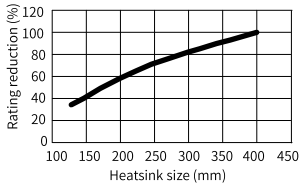
Rated speed (RPM)	3000	
Maximum speed (RPM)	5000	
Torque coefficient (N·m/Arms)	1.2	
Rotor moment of inertia (kg·cm^2)	7.72	

Allowable load

LF (mm)	Allowable Radial Load (N)	Allowed Axial Load (N)
63	980	392

Product dimensions (unit: mm)

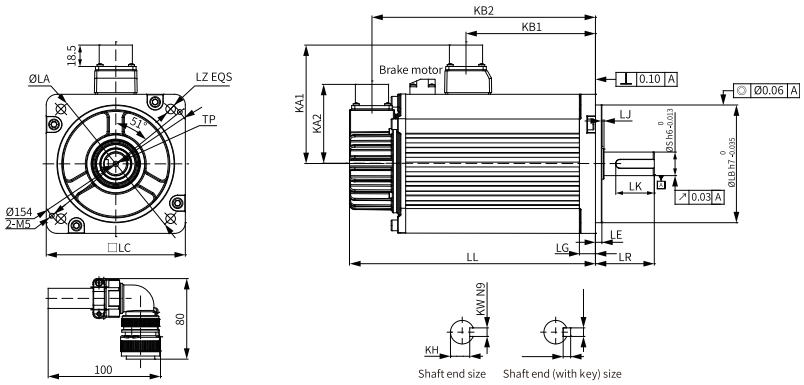

LL	LC	LE	LA	LZ	KA1	KA2	KW	LG	KB1	KB2	
290.5	130	6±0.3	145	4-Ø9	103	74	8	14	136	188.5	
LR		S	LB	TP	LK	KH	LJ		W	T	Weight (kg)
63±1		28	110	M8×20	54	$24^{0}_{-0.2}$	0.5±0.75		8	7	10.73

3.5.10 MS1H2-30C30CD-A334Z-S4

3.5.10.1

Motor Model		Torque-Speed characteristics
Flange Size (mm)	130	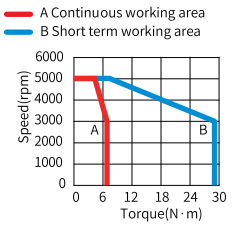
Inertia, Capacity	Low inertia, medium capacity	
Rated Power (kW)	3	
Rated Voltage	380	
Rated torque (N·m)	9.8	
Maximum torque (N·m)	29.4	
Rated Current (Arms)	10	Heatsink-based derating curve
Maximum Current (Arms)	30	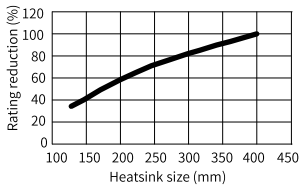
Rated speed (RPM)	3000	
Maximum speed (RPM)	5000	
Torque coefficient (N·m/Arms)	1.2	
Rotor moment of inertia (kg·cm^2)	10.22	

Electrical specifications of the motor with brake

Holding Torque (N·m)	Supply Voltage (VDC) ±10%	Rated power (W)	Coil Resistance (Ω)(±7%)	Exciting Current (A)	Apply Time (ms)	Release Time (ms)	Backlash (°)
16	24	27	21.3	1.13	⩽ 100	⩽ 60	⩽ 0.5

Allowable load

LF (mm)	Allowable Radial Load (N)	Allowed Axial Load (N)
63	980	392

Product dimensions (unit: mm)

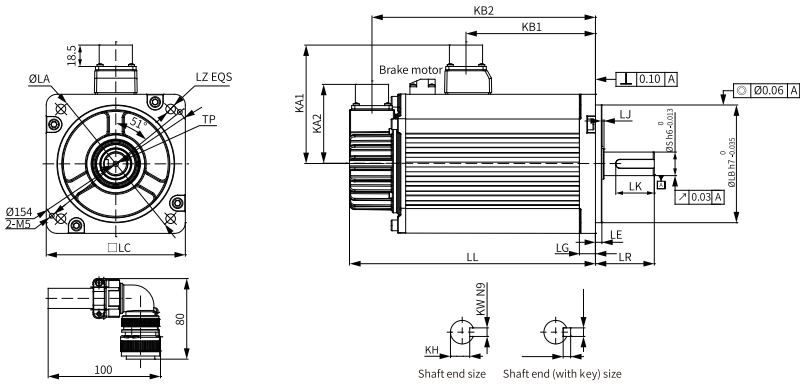

LL	LC	LE	LA	LZ	KA1	KA2	KW	LG	KB1	KB2	
265.5	130	6±0.3	145	4-Ø9	103	74	8	14	139	244.5	
LR		S	LB	TP	LK	KH	LJ		W	T	Weight (kg)
63±1		28	110	M8×20	54	$24^{0}_{-0.2}$	0.5±0.75		8	7	13.2

3.5.11 MS1H2-40C30CD-A331Z

3.5.11.1

Motor Model		Torque-Speed characteristics
Flange Size (mm)	130	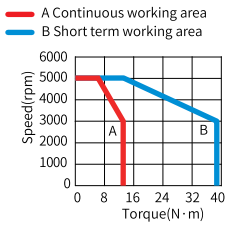
Inertia, Capacity	Low inertia, medium capacity	
Rated Power (kW)	4	
Rated Voltage	380	
Rated torque (N·m)	12.6	
Maximum torque (N·m)	37.8	
Rated Current (Arms)	13.6	Heatsink-based derating curve
Maximum Current (Arms)	40.8	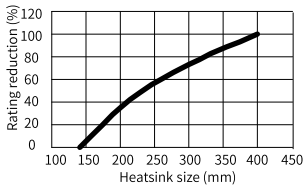
Rated speed (RPM)	3000	
Maximum speed (RPM)	5000	
Torque coefficient (N·m/Arms)	1.12	
Rotor moment of inertia (kg·cm^2)	12.1	

Allowable load

LF (mm)	Allowable Radial Load (N)	Allowed Axial Load (N)
63	1176	392

Product dimensions (unit: mm)

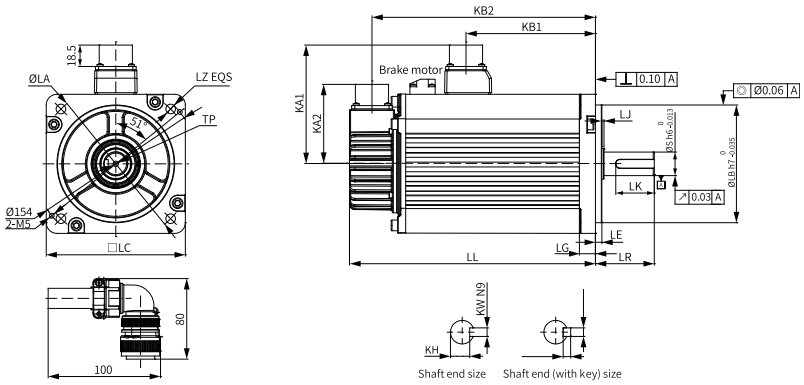

LL	LC	LE	LA	LZ	KA1	KA2	KW	LG	KB1	KB2	
252	130	6±0.3	145	4-Ø9	103	74	8	14	178.5	231	
LR		S	LB	TP	LK	KH	LJ		W	T	Weight (kg)
63±1		28	110	M8×20	54	$24^{0}_{-0.2}$	0.5±0.75		8	7	15.43

3.5.12 MS1H2-40C30CD-A334Z-S4

3.5.12.1

Motor Model		Torque-Speed characteristics
Flange Size (mm)	130	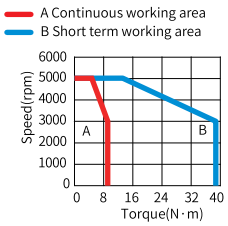
Inertia, Capacity	Low inertia, medium capacity	
Rated Power (kW)	4	
Rated Voltage	380	
Rated torque (N·m)	12.6	
Maximum torque (N·m)	37.8	
Rated Current (Arms)	13.6	Heatsink-based derating curve
Maximum Current (Arms)	40.8	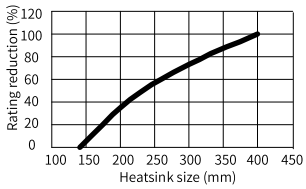
Rated speed (RPM)	3000	
Maximum speed (RPM)	5000	
Torque coefficient (N·m/Arms)	1.12	
Rotor moment of inertia (kg·cm^2)	14.6	

Electrical specifications of the motor with brake

Holding Torque (N·m)	Supply Voltage (VDC) ±10%	Rated power (W)	Coil Resistance (Ω)(±7%)	Exciting Current (A)	Apply Time (ms)	Release Time (ms)	Backlash (°)
16	24	27	21.3	1.13	⩽ 100	⩽ 60	⩽ 0.5

Allowable load

LF (mm)	Allowable Radial Load (N)	Allowed Axial Load (N)
63	1176	392

Product dimensions (unit: mm)

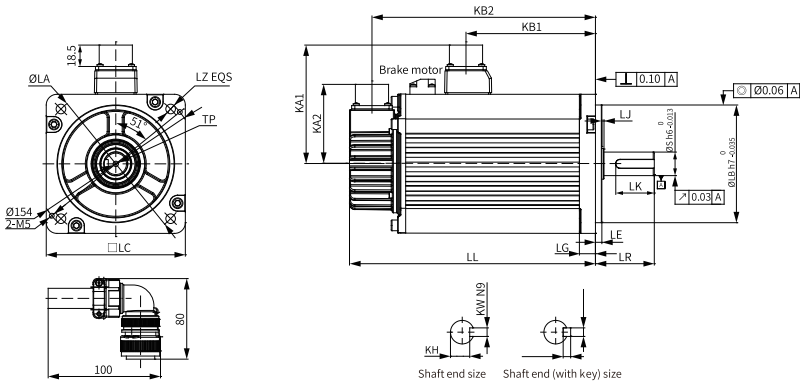

LL	LC	LE	LA	LZ	KA1	KA2	KW	LG	KB1	KB2	
308	130	6±0.3	145	4-Ø9	103	74	8	14	181.5	287	
LR		S	LB	TP	LK	KH	LJ		W	T	Weight (kg)
63±1		28	110	M8×20	54	$24^{0}_{-0.2}$	0.5±0.75		8	7	17.9

3.5.13 MS1H2-50C30CD-A331Z

3.5.13.1

Motor Model		Torque-Speed characteristics
Flange Size (mm)	130	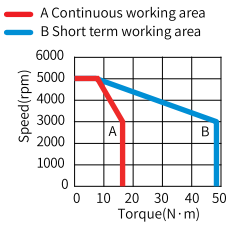
Inertia, Capacity	Low inertia, medium capacity	
Rated Power (kW)	5	
Rated Voltage	380	
Rated torque (N·m)	15.8	
Maximum torque (N·m)	47.4	
Rated Current (Arms)	16	Heatsink-based derating curve
Maximum Current (Arms)	48	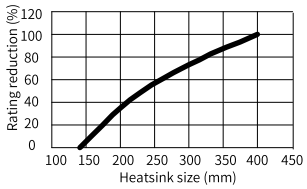
Rated speed (RPM)	3000	
Maximum speed (RPM)	5000	
Torque coefficient (N·m/Arms)	1.29	
Rotor moment of inertia (kg·cm^2)	15.4	

Allowable load

LF (mm)	Allowable Radial Load (N)	Allowed Axial Load (N)
63	1176	392

Product dimensions (unit: mm)

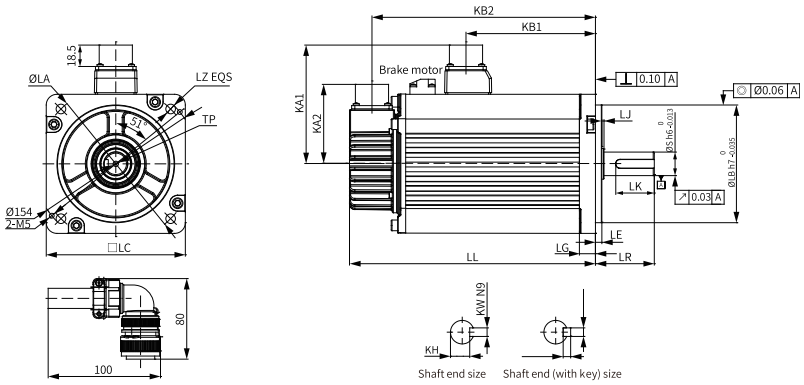

LL	LC	LE	LA	LZ	KA1	KA2	KW	LG	KB1	KB2	
294.5	130	6±0.3	145	4-Ø9	103	74	8	14	221	273.5	
LR		S	LB	TP	LK	KH	LJ		W	T	Weight (kg)
63±1		28	110	M8×20	54	$24^{0}_{-0.2}$	0.5±0.75		8	7	16.2

3.5.14 MS1H2-50C30CD-A334Z-S4

3.5.14.1

Motor Model		Torque-Speed characteristics
Flange Size (mm)	130	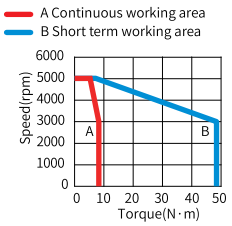
Inertia, Capacity	Low inertia, medium capacity	
Rated Power (kW)	5	
Rated Voltage	380	
Rated torque (N·m)	15.8	
Maximum torque (N·m)	47.4	
Rated Current (Arms)	16	Heatsink-based derating curve
Maximum Current (Arms)	48	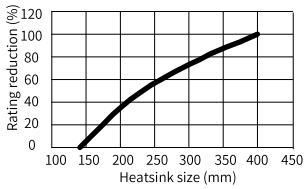
Rated speed (RPM)	3000	
Maximum speed (RPM)	5000	
Torque coefficient (N·m/Arms)	1.29	
Rotor moment of inertia (kg·cm^2)	17.9	

Electrical specifications of the motor with brake

Holding Torque (N·m)	Supply Voltage (VDC) ±10%	Rated power (W)	Coil Resistance (Ω)(±7%)	Exciting Current (A)	Apply Time (ms)	Release Time (ms)	Backlash (°)
16	24	27	21.3	1.13	⩽ 100	⩽ 60	⩽ 0.5

Allowable load

LF (mm)	Allowable Radial Load (N)	Allowed Axial Load (N)
63	1176	392

Product dimensions (unit: mm)

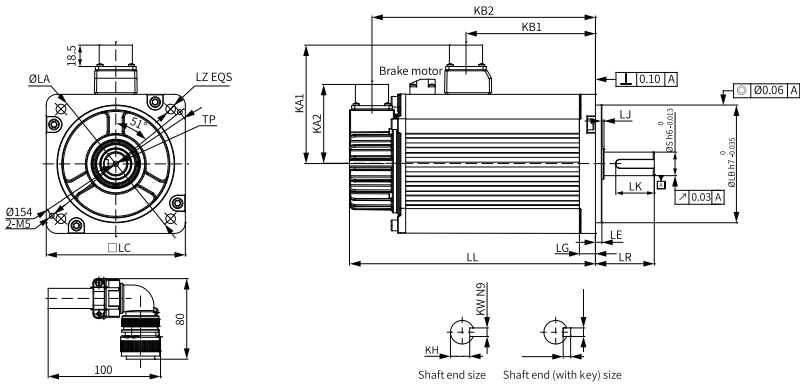

LL	LC	LE	LA	LZ	KA1	KA2	KW	LG	KB1	KB2	
350.5	130	6±0.3	145	4-Ø9	103	74	8	14	224	329.5	
LR		S	LB	TP	LK	KH	LJ		W	T	Weight (kg)
63±1		28	110	M8×20	54	$24^{0}_{-0.2}$	0.5±0.75		8	7	18.4

3.6 Motor with Medium Inertia and Medium Capacity (MS1H3)

3.6.1 MS1H3-85B15CB-A33*Z

3.6.1.1

Motor Model			Torque-Speed characteristics
Flange Size (mm)	130		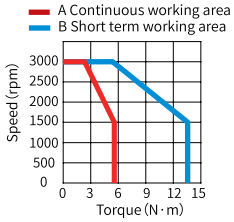
Inertia, Capacity	Medium inertia, medium capacity		
Rated output (kW)	0.85		
Voltage (V)	220		
Rated torque (N·m)	5.39		
Maximum torque (N·m)	13.5		
Rated Current (Arms)	6.6		Heatsink-based derating curve
Maximum Current (Arms)	16.5		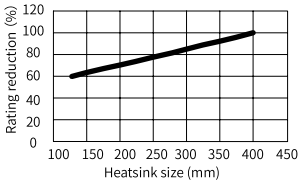
Rated speed (RPM)	1500		
Maximum speed (RPM)	3000		
Torque coefficient (N·m/Arms)	0.95		
Rotor moment of inertia (kg·cm^2)	Motor without brake	13.3	
	Motor with brake	14	

Electrical specifications of the motor with brake

Holding torque (N·m)	Supply Voltage (V DC)±10%	Rated Power (W)	Coil Resistance (Ω) (±7%)	Exciting Current (A)	Apply Time (ms)	Release Time (ms)	Backlash (°)
12	24	19.4	29.7	0.81	⩽ 120	⩽ 60	⩽ 0.5

Allowable load

LF (mm)	Allowable Radial Load (N)	Allowed Axial Load (N)
45	686	196

Product dimensions (unit: mm)

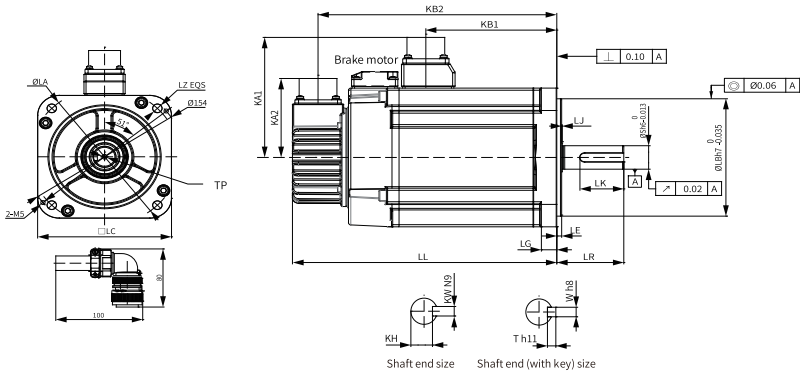

LL	LC	LE	LA	LZ	KA1	KB1	KA2	KB2	LG	kW
146 (182)	130	4	145	4-Ø9	103	72.5	74	125 (161)	14	8
LR	S	LB	TP	LK	KH	LJ		W	T	Weight (kg)
55±1	22	110	M6×20	36	$18^{0}_{-0.2}$	0.5±0.75		8	7	7 (8)

3.6.2 MS1H3-85B15CD-A33*Z

3.6.2.1

Motor Model			Torque-Speed characteristics
Flange Size (mm)	130		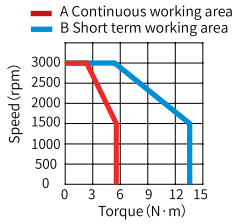
Inertia, Capacity	Medium inertia, medium capacity		
Rated output (kW)	0.85		
Voltage (V)	380		
Rated torque (N·m)	5.39		
Maximum torque (N·m)	13.5		
Rated Current (Arms)	3.3		Heatsink-based derating curve
Maximum Current (Arms)	8.25		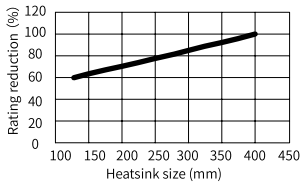
Rated speed (RPM)	1500		
Maximum speed (RPM)	3000		
Torque coefficient (N·m/Arms)	1.87		
Rotor moment of inertia (kg·cm^2)	Motor without brake	13.3	
	Motor with brake	14	

Electrical specifications of the motor with brake

Holding torque (N·m)	Supply Voltage (V DC)±10%	Rated Power (W)	Coil Resistance (Ω) (±7%)	Exciting Current (A)	Apply Time (ms)	Release Time (ms)	Backlash (°)
12	24	19.4	29.7	0.81	⩽ 120	⩽ 60	⩽ 0.5

Allowable load

LF (mm)	Allowable Radial Load (N)	Allowed Axial Load (N)
45	686	196

Product dimensions (unit: mm)

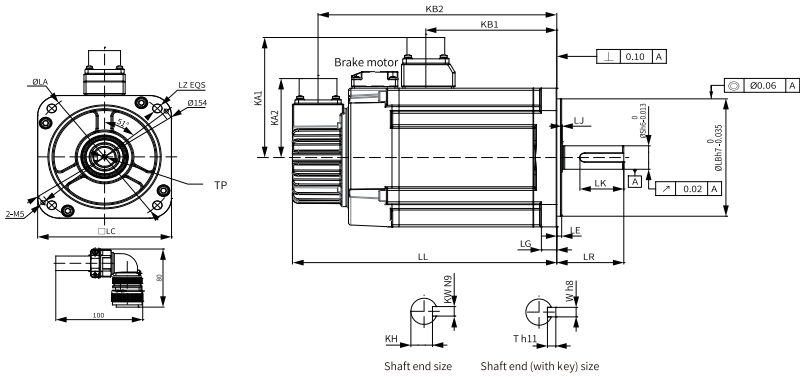

LL	LC	LE	LA	LZ	KA1	KB1	KA2	KB2	LG	kW
146 (182)	130	4	145	4-Ø9	103	72.5	74	125 (161)	14	8
LR	S	LB	TP	LK	KH	LJ		W	T	Weight (kg)
55±1	22	110	M6×20	36	$18^{0}_{-0.2}$	0.5±0.75		8	7	7 (8)

3.6.3 MS1H3-13C15CB-A33*Z

3.6.3.1

Motor Model			Torque-Speed characteristics
Flange Size (mm)	130		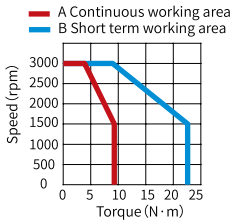
Inertia, Capacity	Medium inertia, medium capacity		
Rated output (kW)	1.3		
Voltage (V)	220		
Rated torque (N·m)	8.34		
Maximum torque (N·m)	20.85		
Rated Current (Arms)	10		Heatsink-based derating curve
Maximum Current (Arms)	25		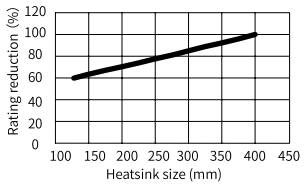
Rated speed (RPM)	1500		
Maximum speed (RPM)	3000		
Torque coefficient (N·m/Arms)	0.95		
Rotor moment of inertia (kg·cm²)	Motor without brake	17.8	
	Motor with brake	18.5	

Electrical specifications of the motor with brake

Holding torque (N·m)	Supply Voltage (V DC)±10%	Rated Power (W)	Coil Resistance (Ω) (±7%)	Exciting Current (A)	Apply Time (ms)	Release Time (ms)	Backlash (°)
12	24	19.4	29.7	0.81	⩽ 120	⩽ 60	⩽ 0.5

Allowable load

LF (mm)	Allowable Radial Load (N)	Allowed Axial Load (N)
45	686	196

Product dimensions (unit: mm)

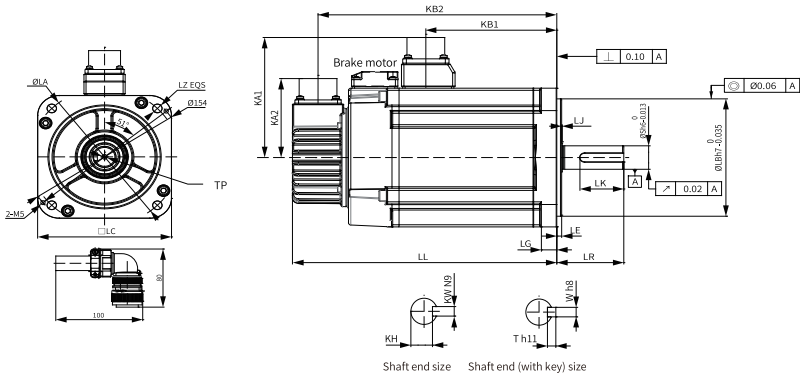

LL	LC	LE	LA	LZ	KA1	KB1	KA2	KB2	LG	kW
163 (199)	130	4	145	4-Ø9	103	89.5	74	142 (178)	14	8
LR	S	LB	TP	LK	KH	LJ		W	T	Weight (kg)
55±1	22	110	M6×20	36	$18^{0}_{-0.2}$	0.5±0.75		8	7	8 (9.5)

3.6.4 MS1H3-13C15CD-A33*Z

3.6.4.1

Motor Model			Torque-Speed characteristics
Flange Size (mm)	130		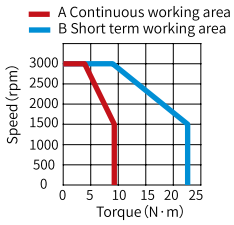
Inertia, Capacity	Medium inertia, medium capacity		
Rated output (kW)	13		
Voltage (V)	380		
Rated torque (N·m)	8.34		
Maximum torque (N·m)	20.85		
Rated Current (Arms)	5		Heatsink-based derating curve
Maximum Current (Arms)	12.5		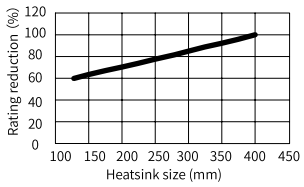
Rated speed (RPM)	1500		
Maximum speed (RPM)	3000		
Torque coefficient (N·m/Arms)	1.87		
Rotor moment of inertia (kg·cm²)	Motor without brake	17.8	
	Motor with brake	18.5	

Electrical specifications of the motor with brake

Holding torque (N·m)	Supply Voltage (V DC)±10%	Rated Power (W)	Coil Resistance (Ω) (±7%)	Exciting Current (A)	Apply Time (ms)	Release Time (ms)	Backlash (°)
12	24	19.4	29.7	0.81	⩽ 120	⩽ 60	⩽ 0.5

Allowable load

LF (mm)	Allowable Radial Load (N)	Allowed Axial Load (N)
45	686	196

Product dimensions (unit: mm)

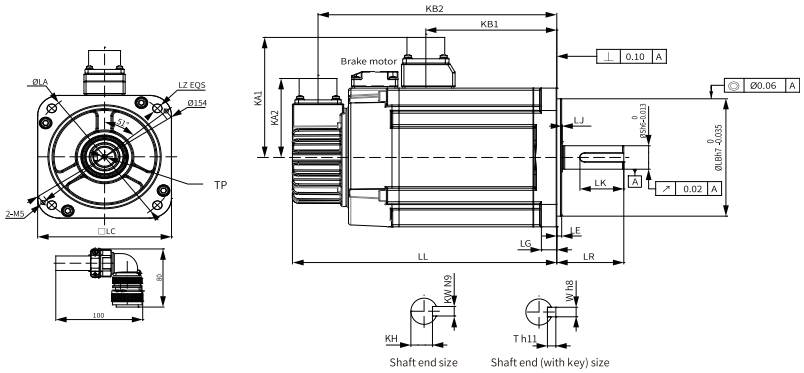

LL	LC	LE	LA	LZ	KA1	KB1	KA2	KB2	LG	kW
163 (199)	130	4	145	4-Ø9	103	89.5	74	142 (178)	14	8
LR	S	LB	TP	LK	KH	LJ		W	T	Weight (kg)
55±1	22	110	M6×20	36	$18^{0}_{-0.2}$	0.5±0.75		8	7	8 (9.5)

3.6.5 MS1H3-18C15CD-A33*Z

3.6.5.1

Motor Model			Torque-Speed characteristics
Flange Size (mm)	130		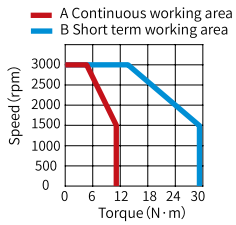
Inertia, Capacity	Medium inertia, medium capacity		
Rated output (kW)	1.8		
Voltage (V)	380		
Rated torque (N·m)	11.5		
Maximum torque (N·m)	28.75		
Rated Current (Arms)	6.6		Heatsink-based derating curve
Maximum Current (Arms)	16.5		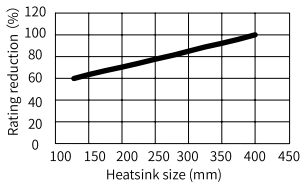
Rated speed (RPM)	1500		
Maximum speed (RPM)	3000		
Torque coefficient (N·m/Arms)	1.87		
Rotor moment of inertia (kg·cm^2)	Motor without brake	25	
	Motor with brake	25.7	

Electrical specifications of the motor with brake

Holding torque (N·m)	Supply Voltage (V DC)±10%	Rated Power (W)	Coil Resistance (Ω) (±7%)	Exciting Current (A)	Apply Time (ms)	Release Time (ms)	Backlash (°)
12	24	19.4	29.7	0.81	⩽ 120	⩽ 60	⩽ 0.5

Allowable load

LF (mm)	Allowable Radial Load (N)	Allowed Axial Load (N)
45	686	196

Product dimensions (unit: mm)

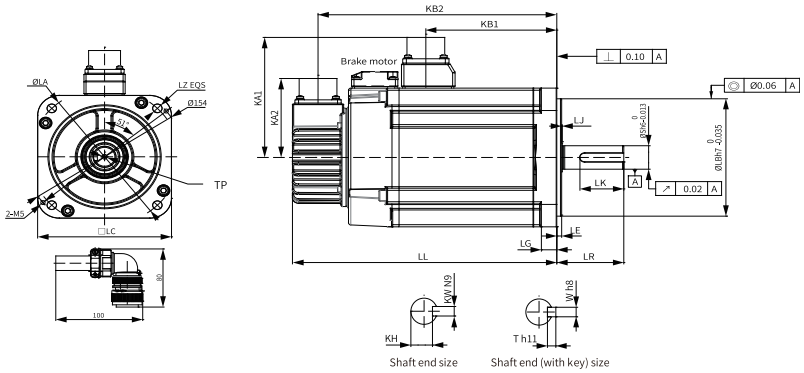

LL	LC	LE	LA	LZ	KA1	KB1	KA2	KB2	LG	kW
181 (217)	130	4	145	4-Ø9	103	107.5	74	160 (196)	14	8
LR	S	LB	TP	LK	KH	LJ		W	T	Weight (kg)
55±1	22	110	M6×20	36	$18^{0}_{-0.2}$	0.5±0.75		8	7	9 (11)

3.6.6 MS1H3-29C15CD-A33*Z

3.6.6.1

Motor Model			Torque-Speed characteristics
Flange Size (mm)	180		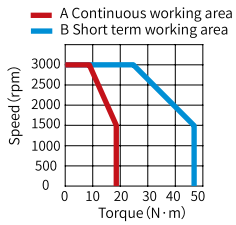
Inertia, Capacity	Medium inertia, medium capacity		
Rated output (kW)	2.9		
Voltage (V)	380		
Rated torque (N·m)	18.6		
Maximum torque (N·m)	46.5		
Rated Current (Arms)	11.9		Heatsink-based derating curve
Maximum Current (Arms)	29.75		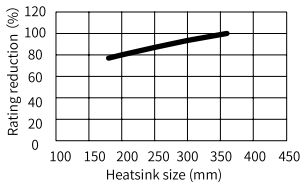
Rated speed (RPM)	1500		
Maximum speed (RPM)	3000		
Torque coefficient (N·m/Arms)	1.82		
Rotor moment of inertia (kg·cm^2)	Motor without brake	55	
	Motor with brake	57.2	

Electrical specifications of the motor with brake

Holding torque (N·m)	Supply Voltage (V DC)±10%	Rated Power (W)	Coil Resistance (Ω) (±7%)	Exciting Current (A)	Apply Time (ms)	Release Time (ms)	Backlash (°)
50	24	40	14.4	1.67	⩽ 200	⩽ 100	⩽ 0.5

Allowable load

LF (mm)	Allowable Radial Load (N)	Allowed Axial Load (N)
79	1470	490

Product dimensions (unit: mm)

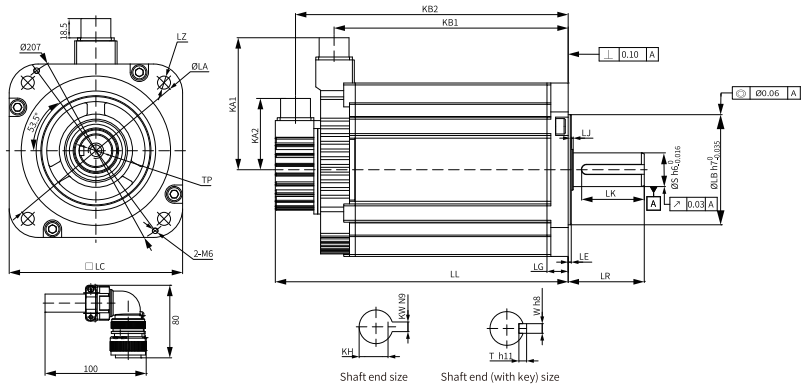

LL	LC	LE	LA	LZ	KA1	KA2	KW	LG	KB1	KB2
197 (273)	180	3.2±0.3	200	4-Ø13.5	138	74	10	18	136 (134)	177 (253)
LR	S	LB	TP	LK	KH	LJ		W	T	Weight (kg)
79±1	35	114.3	M12×25	65	$30^{0}_{-0.2}$	0.3±0.75		10	8	15 (25)

3.6.7 MS1H3-44C15CD-A33*Z

3.6.7.1

Motor Model		
Flange Size (mm)	180	
Inertia, Capacity	Medium inertia, medium capacity	
Rated output (kW)	4.4	
Voltage (V)	380	
Rated torque (N·m)	28.4	
Maximum torque (N·m)	71.1	
Rated Current (Arms)	16.5	
Maximum Current (Arms)	40.5	
Rated speed (RPM)	1500	
Maximum speed (RPM)	3000	
Torque coefficient (N·m/Arms)	1.9	
Rotor moment of inertia (kg·cm²)	Motor without brake	88.9
	Motor with brake	90.8

Torque-Speed characteristics

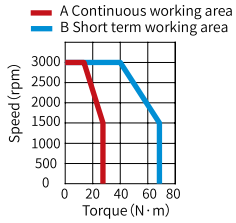

Heatsink-based derating curve

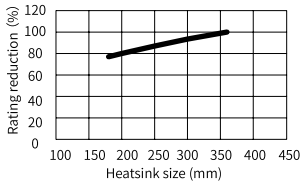

Electrical specifications of the motor with brake

Holding torque (N·m)	Supply Voltage (V DC)±10%	Rated Power (W)	Coil Resistance (Ω) (±7%)	Exciting Current (A)	Apply Time (ms)	Release Time (ms)	Backlash (°)
50	24	40	14.4	1.67	⩽ 200	⩽ 100	⩽ 0.5

Allowable load

LF (mm)	Allowable Radial Load (N)	Allowed Axial Load (N)
79	1470	490

Product dimensions (unit: mm)

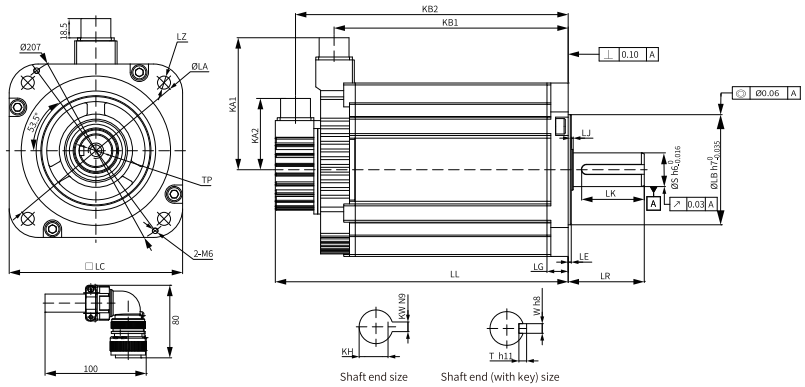

LL	LC	LE	LA	LZ	KA1	KA2	KW	LG	KB1	KB2
230 (307)	180	3.2±0.3	200	4-Ø13.5	138	74	10	18	169 (167)	210 (286)
LR	S	LB	TP	LK	KH	LJ		W	T	Weight (kg)
79±1	35	114.3	M12×25	65	$30^{0}_{-0.2}$	0.3±0.75		10	8	19.5 (30)

3.6.8 MS1H3-55C15CD-A33*Z

3.6.8.1

Motor Model			Torque-Speed characteristics
Flange Size (mm)	180		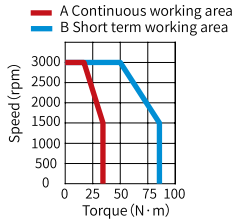
Inertia, Capacity	Medium inertia, medium capacity		
Rated output (kW)	5.5		
Voltage (V)	380		
Rated torque (N·m)	35		
Maximum torque (N·m)	87.6		
Rated Current (Arms)	20.85		Heatsink-based derating curve
Maximum Current (Arms)	52		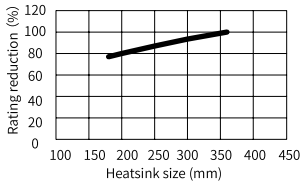
Rated speed (RPM)	1500		
Maximum speed (RPM)	3000		
Torque coefficient (N·m/Arms)	1.74		
Rotor moment of inertia (kg·cm²)	Motor without brake	107	
	Motor with brake	109.5	

Electrical specifications of the motor with brake

Holding torque (N·m)	Supply Voltage (V DC)±10%	Rated Power (W)	Coil Resistance (Ω) (±7%)	Exciting Current (A)	Apply Time (ms)	Release Time (ms)	Backlash (°)
50	24	40	14.4	1.67	⩽ 200	⩽ 100	⩽ 0.5

Allowable load

LF (mm)	Allowable Radial Load (N)	Allowed Axial Load (N)
113	1764	588

Product dimensions (unit: mm)

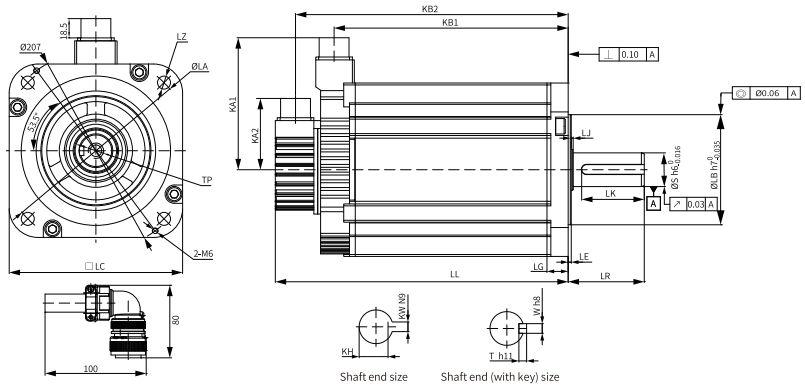

LL	LC	LE	LA	LZ	KA1	KA2	KW	LG	KB1	KB2
274 (350)	180	3.2±0.3	200	4-Ø13.5	138	74	12	18	213 (211)	254 (330)
LR	S	LB	TP	LK	KH	LJ		W	T	Weight (kg)
113±1	42	114.3	M16×32	96	$37^{0}_{-0.2}$	0.3±0.75		12	8	28 (38)

3.6.9 MS1H3-75C15CD-A33*Z

3.6.9.1

Motor Model		
Flange Size (mm)	180	
Inertia, Capacity	Medium inertia, medium capacity	
Rated output (kW)	7.5	
Voltage (V)	380	
Rated torque (N·m)	48	
Maximum torque (N·m)	119	
Rated Current (Arms)	25.7	
Maximum Current (Arms)	65	
Rated speed (RPM)	1500	
Maximum speed (RPM)	3000	
Torque coefficient (N·m/Arms)	1.99	
Rotor moment of inertia (kg·cm^2)	Motor without brake	141
	Motor with brake	143.1

Torque-Speed characteristics

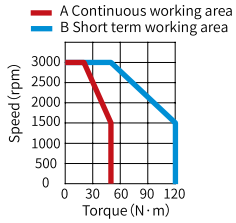

Heatsink-based derating curve

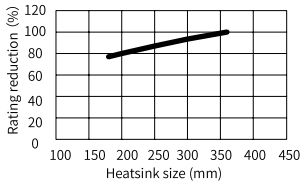

Electrical specifications of the motor with brake

Holding torque (N·m)	Supply Voltage (V DC)±10%	Rated Power (W)	Coil Resistance (Ω) (±7%)	Exciting Current (A)	Apply Time (ms)	Release Time (ms)	Backlash (°)
50	24	40	14.4	1.67	⩽ 200	⩽ 100	⩽ 0.5

Allowable load

LF (mm)	Allowable Radial Load (N)	Allowed Axial Load (N)
113	1764	588

Product dimensions (unit: mm)

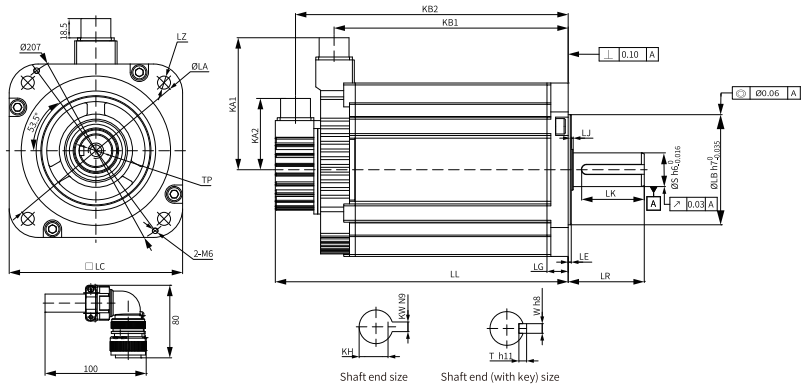

LL	LC	LE	LA	LZ	KA1	KA2	KW	LG	KB1	KB2
330 (407)	180	3.2±0.3	200	4-Ø13.5	138	74	12	18	269 (267)	310 (386)
LR	S	LB	TP	LK	KH	LJ		W	T	Weight (kg)
113±1	42	114.3	M16×32	96	$37^{0}_{-0.2}$	0.3±0.75		12	8	32 (42)

3.7 Motor with Medium Inertia and Small Capacity (MS1H4)

3.7.1 MS1H4-10B30CB-A33*Z

3.7.1.1

Motor Model			Torque-Speed characteristics
Flange Size (mm)	40		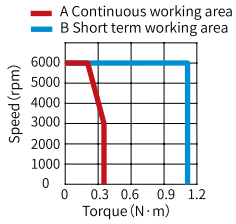
Inertia, Capacity	Low inertia, small capacity		
Rated output (kW)	0.1		
Voltage (V)	220		
Rated torque (N·m)	0.32		
Maximum torque (N·m)	1.12		
Rated Current (Arms)	1.3		Heatsink-based derating curve
Maximum Current (Arms)	4.70		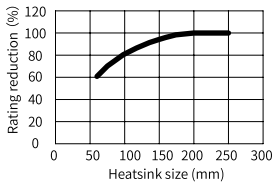
Rated speed (RPM)	3000		
Maximum speed (RPM)	6000		
Torque coefficient (N·m/Arms)	0.26		
Rotor moment of inertia (kg·cm^2)	Motor without brake	0.102	
	Motor with brake	0.104	

Electrical specifications of the motor with brake

Holding torque (N·m)	Supply Voltage (V DC)±10%	Rated Power (W)	Coil Resistance (Ω) (±7%)	Exciting Current (A)	Apply Time (ms)	Release Time (ms)	Backlash (°)
0.32	24	6.1	94.4	0.25	⩽ 40	⩽ 20	⩽ 1.5

Allowable load

LF (mm)	Allowable Radial Load (N)	Allowed Axial Load (N)
20	78	54

Product dimensions (unit: mm)

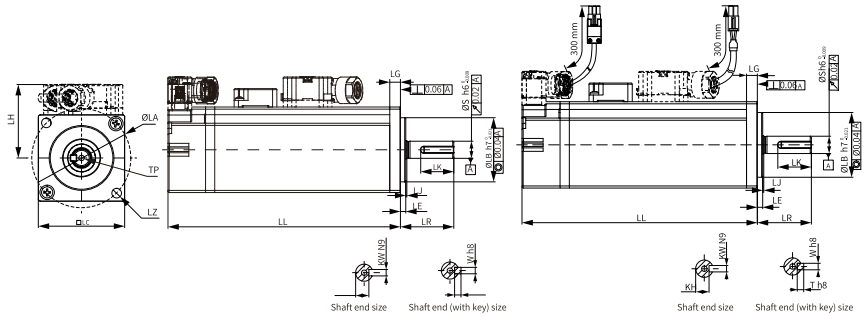

LL	LC	LR	LA	LZ	LH	LG	LE	LJ
89.9 (120.5)	40	25±0.5	46	2-Ø4.5	34	5	2.5±0.5	0.5±0.35
S	LB	TP	LK	KH	kW	W	T	Weight (kg)
8	30	M3x6	15.5	$6.2^{0}_{-0.1}$	3	3	3	0.45 (0.64)

3.7.2 MS1H4-40B30CB-A33*Z(-S)

3.7.2.1

Motor Model			Torque-Speed characteristics
Flange Size (mm)	60		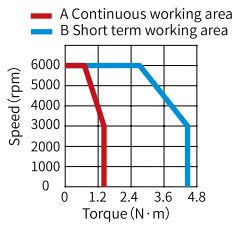
Inertia, Capacity	Medium inertia, low capacity		
Rated output (kW)	0.4		
Voltage (V)	220		
Rated torque (N·m)	1.27		
Maximum torque (N·m)	4.46		
Rated Current (Arms)	2.8		Heatsink-based derating curve
Maximum Current (Arms)	10.1		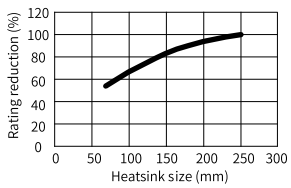
Rated speed (RPM)	3000		
Maximum speed (RPM)	6000		
Torque coefficient (N·m/Arms)	0.53		
Rotor moment of inertia (kg·cm²)	Motor without brake	0.657	
	Motor with brake	0.667	

Electrical specifications of the motor with brake

Holding torque (N·m)	Supply Voltage (V DC)±10%	Rated Power (W)	Coil Resistance (Ω) (±7%)	Exciting Current (A)	Apply Time (ms)	Release Time (ms)	Backlash (°)
1.5	24	7.6	75.79	0.32	⩽ 60	⩽ 20	⩽ 1.5

Allowable load

LF (mm)	Allowable Radial Load (N)	Allowed Axial Load (N)
25	245	74

Product dimensions (unit: mm)

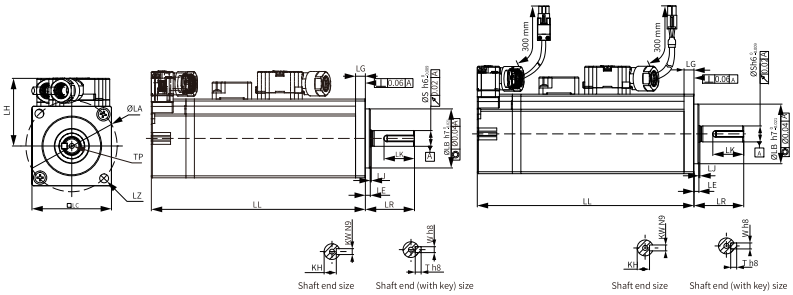

LL	LC	LR	LA	LZ	LH	LG	LE	LJ
105 (128)	60	30±0.5	70	4-Ø5.5	44	7.5	3±0.5	0.5±0.35
S	LB	TP	LK	KH	kW	W	T	Weight (kg)
14	50	M5x8	16.5	$11^{0}_{-0.1}$	5	5	5	1.27 (1.62)

3.7.3 MS1H4-75B30CB-A33*Z(-S)

3.7.3.1

Motor Model			Torque-Speed characteristics
Flange Size (mm)	80		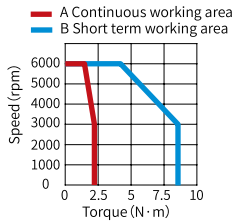
Inertia, Capacity	Medium inertia, low capacity		
Rated output (kW)	0.75		
Voltage (V)	220		
Rated torque (N·m)	2.39		
Maximum torque (N·m)	8.36		
Rated Current (Arms)	4.8		Heatsink-based derating curve
Maximum Current (Arms)	16.9		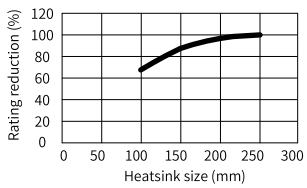
Rated speed (RPM)	3000		
Maximum speed (RPM)	6000		
Torque coefficient (N·m/Arms)	0.58		
Rotor moment of inertia (kg·cm^2)	Motor without brake	2	
	Motor with brake	2.012	

Electrical specifications of the motor with brake

Holding torque (N·m)	Supply Voltage (V DC)±10%	Rated Power (W)	Coil Resistance (Ω) (±7%)	Exciting Current (A)	Apply Time (ms)	Release Time (ms)	Backlash (°)
3.2	24	10	57.6	0.42	⩽ 60	⩽ 40	⩽ 1.0

Allowable load

LF (mm)	Allowable Radial Load (N)	Allowed Axial Load (N)
35	392	147

Product dimensions (unit: mm)

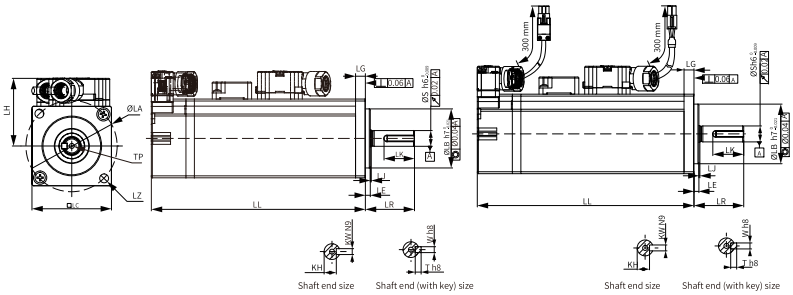

LL	LC	LR	LA	LZ	LH	LG	LE	LJ
117.5 (147.5)	80	35±0.5	90	4-Ø7	54	7.7	3±0.5	0.5±0.35
S	LB	TP	LK	KH	kW	W	T	Weight (kg)
19	70	M6×20	25	$15^{0}_{-0.1}$	6	6	6	2.40 (3.04)

4 Optional parts

4.1 List of Optional Parts

Type	Name	Location	Applicable Model	Description
Peripheral components	Fuse and circuit breaker	Input side of the servo drive	All	To comply with EN 61800-5-1 and UL61800-5-1 standards, install a fuse/circuit breaker on the input side of the servo drive to prevent accidents caused by short circuit in the internal circuit.
	AC Input Reactor	Input side of the servo drive		Eliminates harmonics on the input side and improves the power factor on the input side.
	EMC filter	Input side of the servo drive		Reduces the conducted and radiated interference escaped from the servo drive to the outside.
	Magnetic ring	Output side of the servo drive		Reduces interferences to the outside and the bearing current.
		Signal cable		Improves the anti-interference performance of signals.

4.2 Cables

4.2.1 Description of the Model Number

Power cable

S6-L-M 0 0 0 - 3.0 – T - X
① ②③④ ⑤ ⑥ ⑦

① **Cable Type** S6-L-B/M: motion control power cable B: with brake M: without brake	④ **Connector type at motor side** 0: 6-core plastic connector 1: 9-core military-spec connector 2: 6-core military-spec connector 4: Middle series 4-core connector 5: Middle series 6-core connector 6: SM-PW series 6-core connector 7: SDC-06T series connector (front outgoing) 8: SDC-06T series connector (rear outgoing)	⑤ **Cable Length (m)** 3.0: 3 m 5.0: 5 m 8.0: 8 m 10.0: 10 m
② **Connector type at drive side** 0: U-shaped cable lug 1: Needle-shaped cable lug		⑥ **Special requirements** T: Drag chain TS: Shielded flexible cable S: Single shield TTS: Drag chain shielding 20 million times
③ **Cable Size (mm^2)** 0: Wire-saving encoder 1: 100/130/180 flange (drive rated current < 13 A) 2: 180 (drive rated current > 13 A) 3: 4×12 AWG 4: 4×14 AWG 5: 4×16 AWG 6: 4×18 AWG 7: 4×20 AWG		⑦ **Manufacturer** YGS: Igus

Model number of encoder cables

S6-L-P 0 0 0 - 3.0 - T - X
① ②③④ ⑤ ⑥ ⑦

① **Cable Type** S6-L-P: Motion control encoder cable	④ **Connector type at motor side** 0: 9-core plastic connector 1: 9-core military-spec connector 2: 6-core military-spec connector 4: Middle series 4-core connector 5: Middle series 6-core connector 6: SM-PW series 6-core connector 7: SDC-07T series connector (front outgoing) 8: SDC-07T series connector (rear outgoing) 9: DB9 2-rows-Inno A: DB15 2-row-RSF B: DB15 2-row-Renishaw C: DB15 2-row-Banyan D: DB15 3-row-Inovance	⑤ **Cable Length (m)** 3.0: 3 m 5.0: 5 m 8.0: 8 m 10.0: 10 m
② **Connector type at drive side** 0: DB9 1: USB 2: DB15		⑥ **Special requirements** T: Drag chain TS: Shielded flexible cable TTS: Drag chain shielding 20 million times
③ **Encode** 0: Wire-saving encoder 1: Communication incremental encoder 2: Communication multi-turn absolute encoder 3: Optical 4: Magnetic		⑦ **Manufacturer** YGS: Igus

Model number of communication cables

S6N-L-T 00 - 3.0
① ② ③

① **Cable Type** S6-L-T: Motion control communication cable S6N-L-T: IS620F Motion Control Encoder Cable (only for servo drive PC communication cable)	② **Cable type** 00: Servo drive PC communication cable 01: Servo drive network communication cable (CAN&485) 02: Servo drive and PLC communication cable 03: Servo drive termination resistor cable 04: Servo drive network communication cable (EtherCAT) 05: Servo drive network communication cable (Mechatrolink II) 06: Servo drive termination resistor cable (Mechatrolink II)	③ **Cable Length (m)** 3.0: 3 m 5.0: 5 m 8.0: 8 m 10.0: 10 m

4.2.2 Cable Type

Fixed cables

Do not bend or move fixed cables during use. Bending or moving fixed cables may damage the cables and lead to a series of cable-related faults such as poor contact. Secure fixed cables through fixed binding. Certain bending radius must be available for the cables to prevent stress.

Flexible cables

Flexible cables can move along with cable carriers without a high risk of abrasion.

Note

- Do not twist cables inside the cable carrier.
- Ensure the cable can move within the bending radius. Do not move the cables by force. Ensure a relative movement between cables or between the cable and the guiding device is available.
- Do not fix or bundle the cables inside the cable carrier. The cables can be bundled and fixed only at two unmovable ends of the cable carrier.

Oil-resistant cables.

Oil-resistant cables apply to applications requiring shielded power cables, such as machine tools, cutting fluids, and cutting compounds.

Note

- S6-C24 cable kit is required for terminal-type motor encoder cables longer than 25 m. Contact Inovance sales staff for details on the cable length.
- Contact Inovance sales staff for flying leads type motor encoder cables longer than 25 m..

4.2.3 Cable Selection

Power cable

Motor Model	Cable Name		Cable Model	L Cable Length (mm)	Tolerance (T) (mm)	Outline Drawing
MS1H1/ MS1H4 terminal-type motor	Front outlet	Power cable for motor without brake	S6-L-M107-3.0	3000	(-30.30)	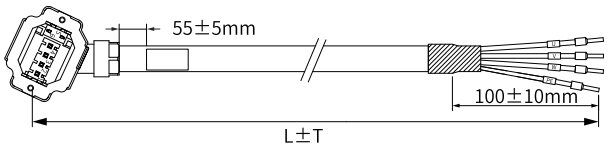
			S6-L-M107-5.0	5000	(-30.50)	
			S6-L-M107-10.0	10000	(-30.80)	
		Brake	S6-L-B107-3.0	3000	(-30.30)	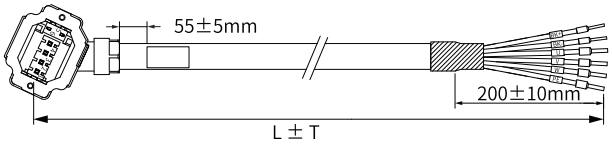
			S6-L-B107-5.0	5000	(-30.50)	
			S6-L-B107-10.0	10000	(-30.80)	
	Rear outlet	Power cable for motor without brake	S6-L-M108-3.0	3000	(-30.30)	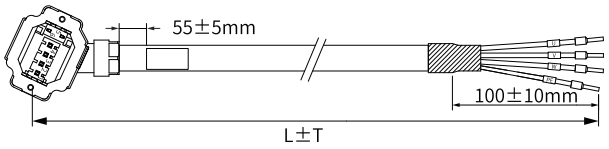
			S6-L-M108-5.0	5000	(-30.50)	
			S6-L-M108-10.0	10000	(-30.80)	
		Brake	S6-L-B108-3.0	3000	(-30.30)	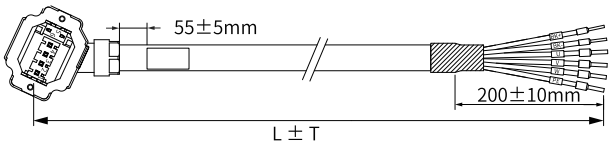
			S6-L-B108-5.0	5000	(-30.50)	
			S6-L-B108-10.0	10000	(-30.80)	
MS1H1/ MS1H4 lead-type (-S) motor	Power cable for motor without brake		S6-L-M100-3.0	3000	(-30.30)	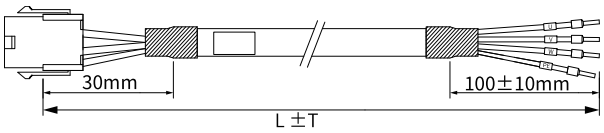
			S6-L-M100-5.0	5000	(-30.50)	
			S6-L-M100-10.0	10000	(-30.80)	
	Brake		S6-L-B100-3.0	3000	(-30.30)	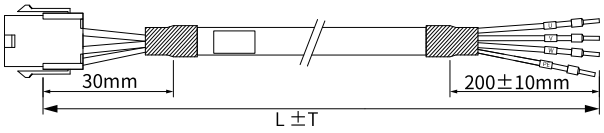
			S6-L-B100-5.0	5000	(-30.50)	
			S6-L-B100-10.0	10000	(-30.80)	
MS1H2 motor rated 3 kW or below/ MS1H3 motor rated 1.8 kW or below	Power cable for motor without brake		S6-L-M111-3.0	3000	(-30.30)	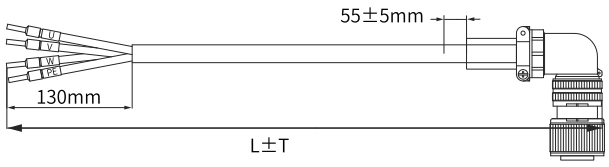
			S6-L-M111-5.0	5000	(-30.50)	
			S6-L-M111-10.0	10000	(-30.80)	
	Brake		S6-L-B111-3.0	3000	(-30.30)	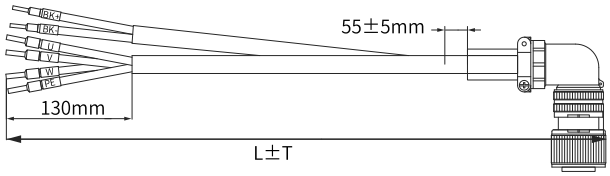
			S6-L-B111-5.0	5000	(-30.50)	
			S6-L-B111-10.0	10000	(-30.80)	

Motor Model	Cable Name	Cable Model	L Cable Length (mm)	Tolerance (T) (mm)	Outline Drawing
MS1H2 motor rated 4 kW/5 kW	Power cable for motor without brake	S6-L-M011-3.0	3000	(-30.30)	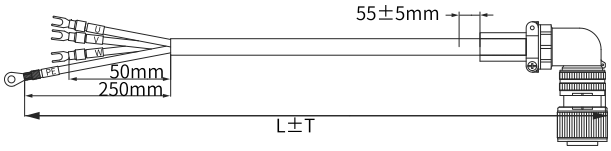
		S6-L-M011-5.0	5000	(-30.50)	
		S6-L-M011-10.0	10000	(-30.80)	
	Brake	S6-L-B011-3.0	3000	(-30.30)	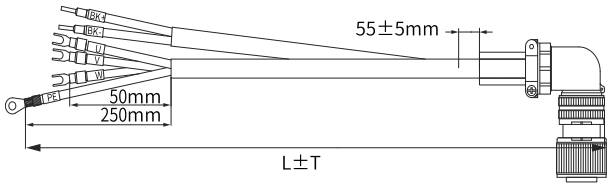
		S6-L-B011-5.0	5000	(-30.50)	
		S6-L-B011-10.0	10000	(-30.80)	
MS1H3 motor rated 2.9 kW	Power cable for motor without brake	S6-L-M112-3.0	3000	(-30.30)	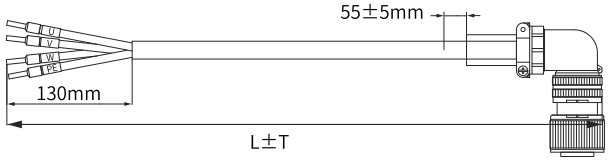
		S6-L-M112-5.0	5000	(-30.50)	
		S6-L-M112-10.0	10000	(-30.80)	
	Brake	S6-L-B112-3.0	3000	(-30.30)	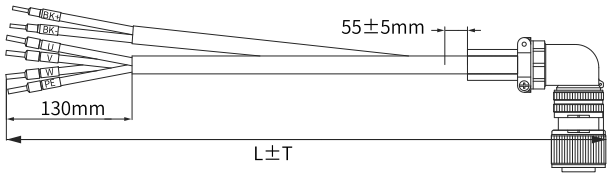
		S6-L-B112-5.0	5000	(-30.50)	
		S6-L-B112-10.0	10000	(-30.80)	
MS1H3 motor rated 4.4 kW or above	Power cable for motor without brake	S6-L-M022-3.0	3000	(-30.30)	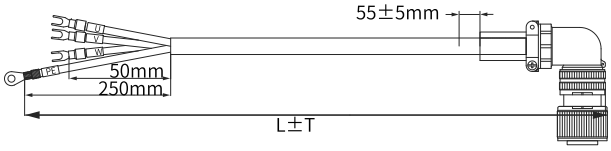
		S6-L-M022-5.0	5000	(-30.50)	
		S6-L-M022-10.0	10000	(-30.80)	
	Brake	S6-L-B022-3.0	3000	(-30.30)	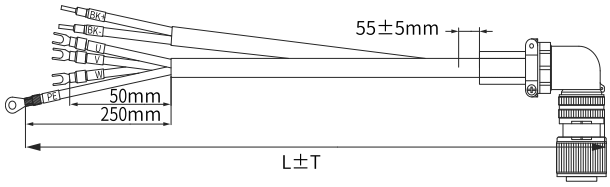
		S6-L-B022-5.0	5000	(-30.50)	
		S6-L-B022-10.0	10000	(-30.80)	

Encoder cable

Motor Model	Cable Name		Cable Model	L Cable Length (mm)	Tolerance (T) (mm)	Outline Drawing
MS1H1/ MS1H4 terminal-type motor	Front outlet	Single-turn absolute encoder cable	S6-L-P114-3.0	3000	(-30.30)	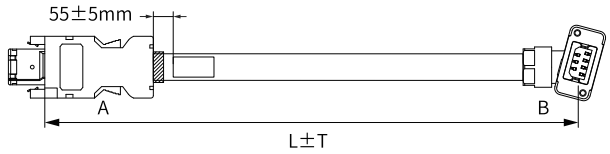
			S6-L-P114-5.0	5000	(-30.50)	
			S6-L-P114-10.0	10000	(-30.80)	
		Multi-turn absolute encoder cable	S6-L-P124-3.0	3000	(-30.30)	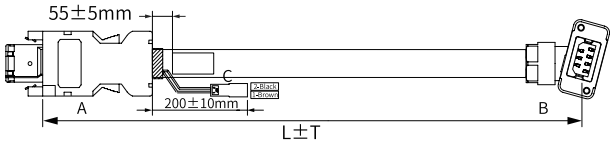
			S6-L-P124-5.0	5000	(-30.50)	
			S6-L-P124-10.0	10000	(-30.80)	
	Rear outlet	Single-turn absolute encoder cable	S6-L-P115-3.0	3000	(-30.30)	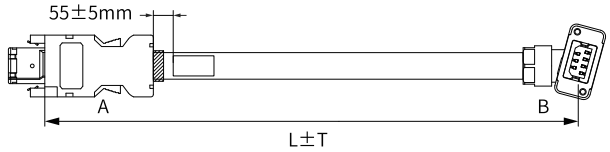
			S6-L-P115-5.0	5000	(-30.50)	
			S6-L-P115-10.0	10000	(-30.80)	
		Multi-turn absolute encoder cable	S6-L-P125-3.0	3000	(-30.30)	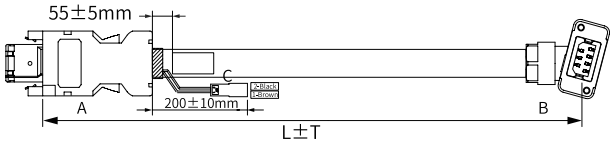
			S6-L-P125-5.0	5000	(-30.50)	
			S6-L-P125-10.0	10000	(-30.80)	
MS1H1/MS1H4 lead-type (-S) motor		Single-turn absolute encoder cable	S6-L-P110-3.0	3000	(-30.30)	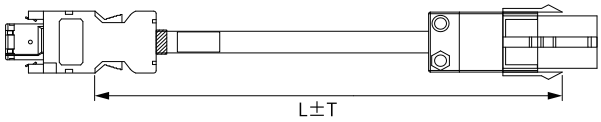
			S6-L-P110-5.0	5000	(-30.50)	
			S6-L-P110-10.0	10000	(-30.80)	
		Multi-turn absolute encoder cable	S6-L-P120-3.0	3000	(-30.30)	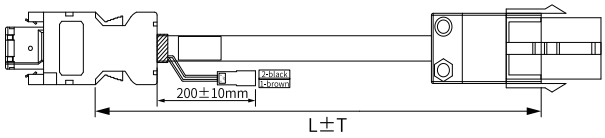
			S6-L-P120-5.0	5000	(-30.50)	
			S6-L-P120-10.0	10000	(-30.80)	
MS1H2/MS1H3 motor		Single-turn absolute encoder cable	S6-L-P111-3.0	3000	(-30.30)	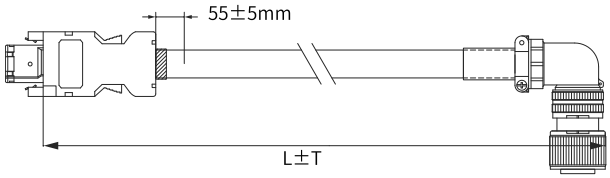
			S6-L-P111-5.0	5000	(-30.50)	
			S6-L-P111-10.0	10000	(-30.80)	
		Multi-turn absolute encoder cable	S6-L-P121-3.0	3000	(-30.30)	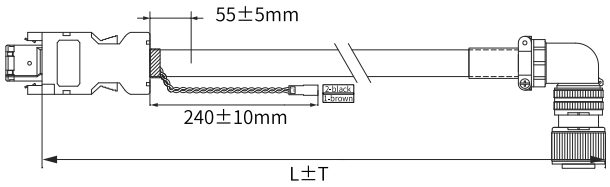
			S6-L-P121-5.0	5000	(-30.50)	
			S6-L-P121-10.0	10000	(-30.80)	

Communication cables

Cable Name	Cable Model	Cable Length (mm)	Tolerance (T) (mm)	Outline Drawing
Multi-Drive Communication Cable	S6-L-T01-0.3	300	(-10.10)	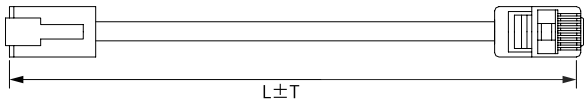
Servo drive to host controller communication cable	S6-L-T02-2.0	2000	(-20.20)	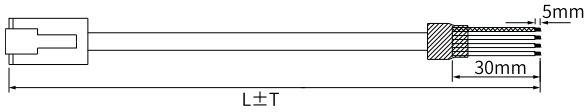
Servo Drive Termination Resistor Connector	S6-L-T03-0.0	-	-	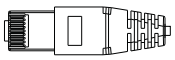

Connector Kit

Name	Model	Outline Drawing
Battery kit	S6-C4A	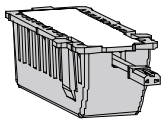
CN1 terminal (DB44)	S6-C8	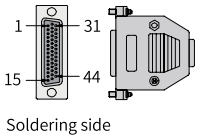 Note: DB44 (DB44 needs to be purchased separately for MS1 series motors.)
CN7 terminal (DB15)	S6-C6	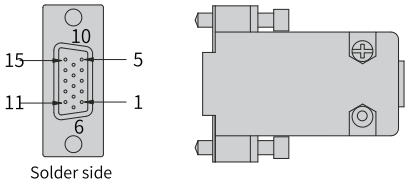
MS1H1 lead-type (-S) motor connector	S6-C26	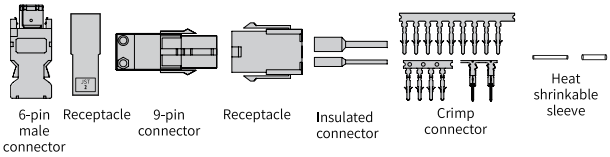

Name	Model	Outline Drawing
MS1H2/MS1H3 motor connector (1.8 kW and below)	S6-C29	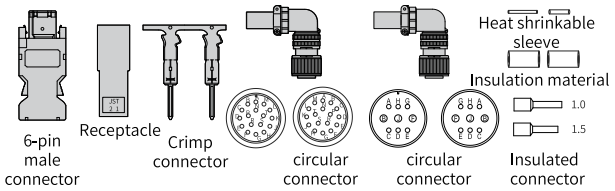
MS1H3 motor connector (2.9 kW and above)	S6-C39	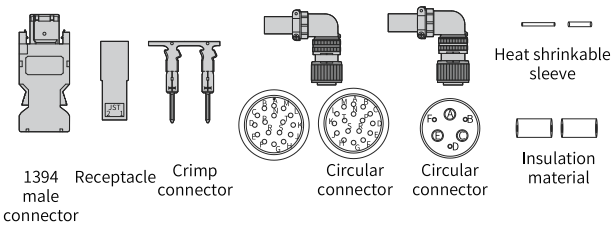

4.3 Peripheral components

4.3.1 Fuse

To prevent accidents caused by short circuit, install a fuse on the input side of the servo drive.

Table 4–1 List of recommended fuses

Servo drive SV670P****I			Recommended Fuse		
Size	Model	Rated Input Current (A)	Manufacturer	Rated Current (A)	Model
Single-phase 220 V					
Size A	S1R6	2.3	Bussmann	15	FWP-15B
	S2R8	4.0		20	FWP-20B
Size C	S5R5	7.9		35	FWP-35C
	S7R6	9.6		40	FWP-40C
Size D	S012	12.8		40	FWP-40C
Three-phase 220 V					
Size A	S1R6	1.1	Bussmann	15	FWP-15B
	S2R8	1.8		20	FWP-20B
Size C	S5R5	4.4		35	FWP-35C
	S7R6	5.1		40	FWP-40C
Size D	S012	8.0		35	FWP-35C
Size E	S018	8.7		50	FWP-50C
	S022	11.0		70	FWP-70C
	S027	23.8		90	FWP-90C
Three-phase 380 V					
Size C	T3R5	2.4	Bussmann	15	FWP-15B
	T5R4	3.6		20	FWP-20B
Size D	T8R4	5.6		20	FWP-20B
	T012	8.0		35	FWP-35C
Size E	T017	12.0		50	FWP-50C
	T021	16.0		70	FWP-70C
	T026	21.0		90	FWP-90C

4.3.2 Electromagnetic contactor

Table 4–2 Recommended electromagnetic contactor models

Servo drive SV670P****I			Recommended Contactor		
Size	Model	Rated Input Current (A)	Manufacturer	Current (A)	Model
Single-phase 220 V					
Size A	S1R6	2.3	Schneider	9	LC1 D09
	S2R8	4.0		9	LC1 D09
Size C	S5R5	7.9		9	LC1 D09
	S7R6	9.6		12	LC1 D12
Size D	S012	12.8		18	LC1 D18
Three-phase 220 V					
Size A	S1R6	1.1	Schneider	9	LC1 D09
	S2R8	1.8			
Size C	S5R5	4.4			
	S7R6	5.1			
Size D	S012	8.0		9	LC1 D09
Size E	S018	8.7		12	LC1 D12
	S022	11.0			
	S027	23.8		25	LC1 D25
Three-phase 380 V					
Size C	T3R5	2.4	Schneider	9	LC1 D09
	T5R4	3.6		9	LC1 D09
Size D	T8R4	5.6		9	LC1 D09
	T012	8.0		9	LC1 D09
Size E	T017	12.0		18	LC1 D18
	T021	16.0		18	LC1 D18
	T026	21.0		25	LC1 D25

4.3.3 Circuit breaker

Table 4–3 Recommended circuit breaker models

Servo drive SV670P****I			Recommended Circuit Breaker		
Size	Model	Rated Input Current (A)	Manufacturer	Current (A)	Model
Single-phase 220 V					
Size A	S1R6	2.3	Schneider	4	OSMC32N2C4
	S2R8	4.0		6	OSMC32N2C6
Size C	S5R5	7.9		16	OSMC32N2C16
	S7R6	9.6		16	OSMC32N2C16
Size D	S012	12.8		20	OSMC32N2C20
Three-phase 220 V					
Size A	S1R6	1.1	Schneider	4	OSMC32N3C4
	S2R8	1.8		6	OSMC32N3C6
Size C	S5R5	4.4		16	OSMC32N3C16
	S7R6	5.1		16	OSMC32N3C16
Size D	S012	8.0		16	OSMC32N3C16
Size E	S018	8.7		20	OSMC32N3C20
	S022	11.0		25	OSMC32N3C25
	S027	23.8		32	OSMC32N3C32

Servo drive SV670P****I			Recommended Circuit Breaker		
Size	Model	Rated Input Current (A)	Manufacturer	Current (A)	Model
Three-phase 380 V					
Size C	T3R5	2.4	Schneider	4	OSMC32N2C4
	T5R4	3.6		6	OSMC32N2C6
Size D	T8R4	5.6		10	OSMC32N2C10
	T012	8.0		16	OSMC32N2C16
Size E	T017	12.0		20	OSMC32N2C20
	T021	16.0		25	OSMC32N2C25
	T026	21.0		32	OSMC32N2C32

Note

For UL-compliant products, see section "UL/cUL Certification" in SV670P Series Servo Drive Hardware Guide for recommended fuse/circuit breaker models.

If a residual current device (RCD) is needed, select the RCD according to the following requirements:

- Use a B-type RCD because the drive may generate DC leakage current in the protective conductor.
- For each drive, use an RCD whose tripping current is not lower than 100 mA to prevent RCD malfunction due to high-frequency leakage current generated by the drive.
- When multiple drives are connected in parallel and share one RCD, select an RCD whose tripping current is not lower than 300 mA.
- Use Chint or Schneider RCDs (recommended).

4.3.4 AC Input Reactor

Model selection

An AC input reactor is optional and mainly used to reduce harmonics in the input current. Install an external reactor as needed in actual applications. The following table lists the recommended manufacturers and models of input reactors.

Table 4–4 AC input reactor model selection

Servo drive SV670P****I			Applicable Reactor	Inductance (mH)
Size	Model	Rated Input Current (A)		
Three-phase 220 V				
Size A	S1R6	1.1	MD-ACL-10-5-4T	5
	S2R8	1.8	MD-ACL-10-5-4T	5
Size C	S5R5	4.4	MD-ACL-10-5-4T	5
	S7R6	5.1	MD-ACL-10-5-4T	5
Size D	S012	8.0	MD-ACL-10-5-4T	5
Size E	S018	8.7	MD-ACL-15-3-4T	3
	S022	11.0	MD-ACL-15-3-4T	3
	S027	23.8	MD-ACL-40-1.45-4T	1.45
Three-phase 380 V				

Servo drive SV670P****I			Applicable Reactor	Inductance (mH)
Size	Model	Rated Input Current (A)		
Size C	T3R5	2.4	MD-ACL-10-5-4T	5
	T5R4	3.6	MD-ACL-10-5-4T	5
Size D	T8R4	5.6	MD-ACL-10-5-4T	5
	T012	8.0	MD-ACL-10-5-4T	5
Size E	T017	12.0	MD-ACL-15-3-4T	3
	T021	16.0	MD-ACL-40-1.45-4T	1.45
	T026	21.0	MD-ACL-40-1.45-4T	1.45

Dimensions

- Inovance input reactors

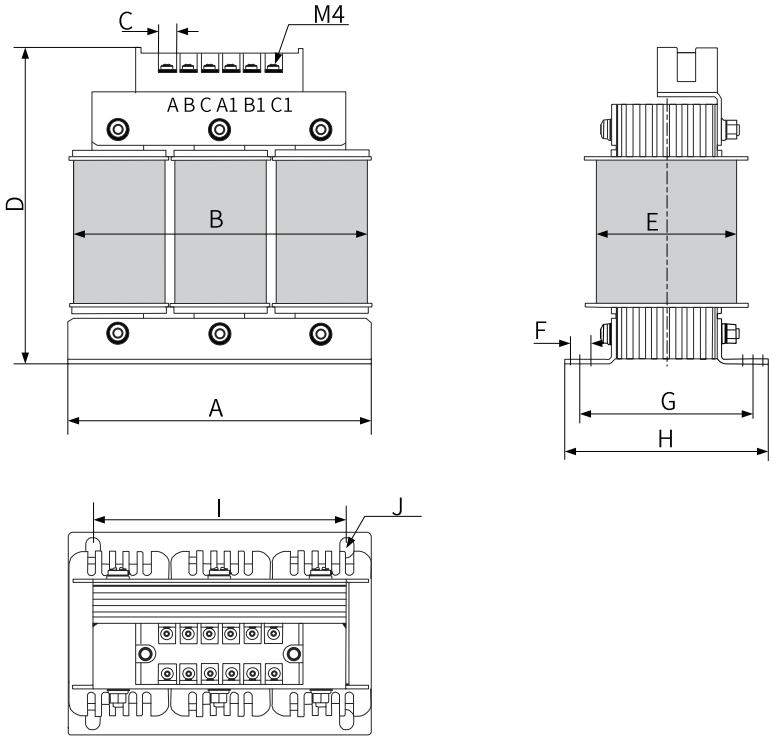

Figure 4-1 Dimensions of 10 A to 15 A AC input reactors

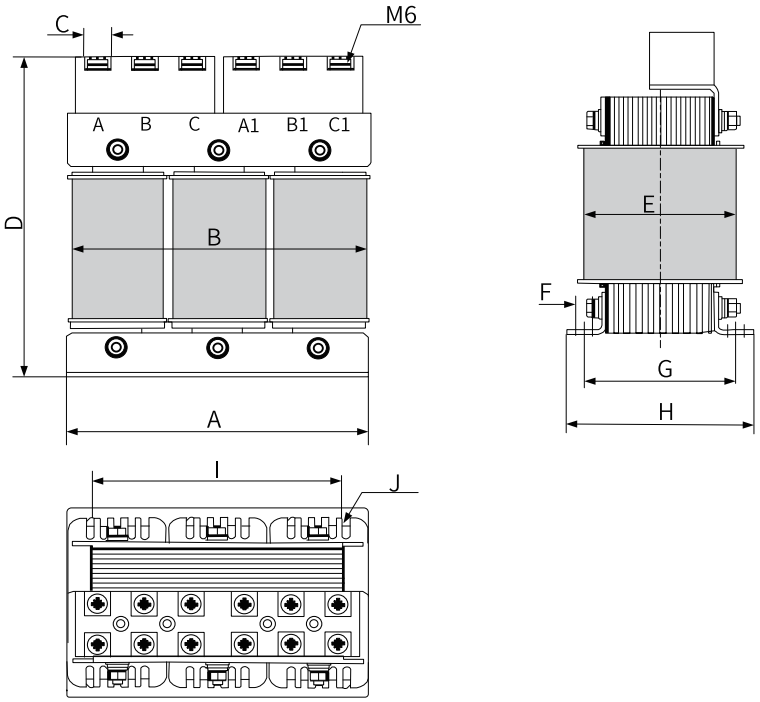

Figure 4-2 Dimensions of 40 A (1.45 mH) AC input reactors

Table 4–5 Dimensions of Inovance AC input reactors (unit: mm)

Model	A	B	C	D	E	F	G	H	I	J
MD-ACL-10-5-4T	150±2	155	8	160	80	10	85±2	100±2	125±1	Φ7 x 10
MD-ACL-15-3-4T	150±2	155	8	160	80	10	85±2	100±2	125±1	Φ7 x 10
MD-ACL-40-1.45-4T	180±2	185	16	200	105	10	95±2	117±2	150±1	Φ7 x 10

4.3.5 EMC filter

Model selection

To comply with EN IEC 61800-3 requirements in terms of radiated and conducted emission, install an EMC filter listed in the following table. EMC filter options are FN 2090 and FN 3287 series EMC filters manufactured by Schaffner. Select the EMC filter according to the rated input current of the servo drive, as shown in the following table.

Table 4–6 Standard EMC filter model and appearance

Filter Model		Appearance
Schaffner	FN 2090 series	
	FN 3287 series	

Table 4–7 Filter model selection (Schaffner)

Servo drive SV670P****I			Applicable Filter
Size	Model	Rated Input Current (A)	
Single-phase 220 V			
Size A	S1R6	2.3	FN 2090-3-06
	S2R8	4.0	FN 2090-4-06
Size C	S5R5	7.9	FN 2090-8-06
	S7R6	9.6	FN 2090-10-06
Size D	S012	12.8	FN 2090-16-06
Three-phase 220 V			
Size A	S1R6	1.1	FN 3287-10-44-C28-R65
	S2R8	1.8	FN 3287-10-44-C28-R65
Size C	S5R5	4.4	FN 3287-10-44-C28-R65
	S7R6	5.1	FN 3287-10-44-C28-R65
Size D	S012	8.0	FN 3287-10-44-C28-R65
Size E	S018	8.7	FN 3287-10-44-C28-R65
	S022	11.0	FN 3287-16-44-C33-R65
	S027	23.8	FN 3287-25-33-C33-R65
Three-phase 380 V			
Size C	T3R5	2.4	FN 3287-10-44-C28-R65
	T5R4	3.6	FN 3287-10-44-C28-R65
Size D	T8R4	5.6	FN 3287-10-44-C28-R65
	T012	8.0	FN 3287-10-44-C28-R65
Size E	T017	12.0	FN 3287-16-44-C33-R65
	T021	16.0	FN 3287-16-44-C33-R65
	T026	21.0	FN 3287-25-33-C33-R65

Dimensions

- Dimensions of Schaffner FN 2090 series filters

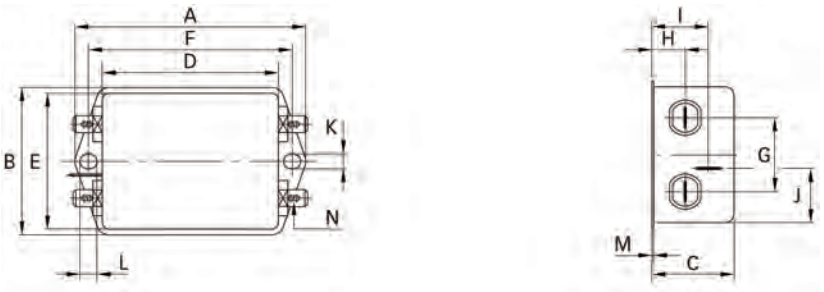

Figure 4-3 Dimensions of FN 2090 series filters (unit: mm)

Table 4–8 Dimensions of FN 2090 series filters (unit: mm)

Rated Current (A)	A	B	C	D	E	F	G	H	I	J	K	L	M	N
3	85	54	30.3	64.8	49.8	75	27	12.3	20.8	19.9	5.3	6.3	0.7	6.3x0.8
4														
6														
8	113.5±1	57.5±1	45.4±1	94±1	56	103	25	12.4	32.4	15.5	4.4	6	1	6.3x0.8

- Dimensions of Schaffner FN 3287 series filters

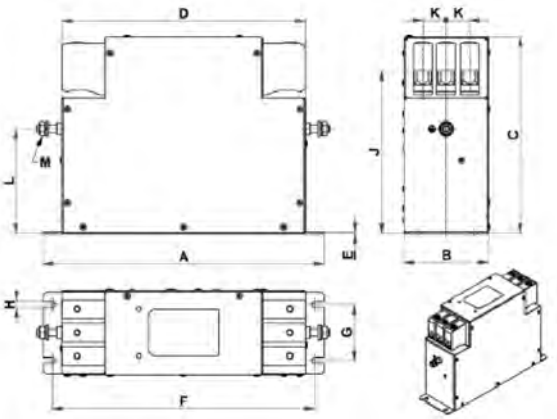

Figure 4-4 Dimension drawing of FN 3287 series filters (unit: mm)

Table 4–9 Dimensions of FN 3287 series filters (unit: mm)

Rated Current (A)	A	B	C	D	E	F	G	H	J±2	K	L±1	M
10	180	40	112	153	0.8	170	20	4.5	94	11	68	M5
16	200	45	112	170	0.8	185	25	5.4	102	11	76	M5
25	205	45	132	173	0.8	190	25	5.4	113	13	83	M5

4.3.6 Magnetic Ring and Magnetic Buckle

The magnetic ring is intended to be installed on the input or output side of the drive. Install the magnetic ring as close to the drive as possible. Installing the magnetic ring on the input side

suppresses the noise in the input power supply system of the drive. Installing the magnetic ring on the output side reduces the bearing current and interference escaped to the outside.

In applications with leakage current and signal cable interference, install a magnetic ring or a ferrite clamp.

Model selection

- Amorphous magnetic ring: featuring a high permeability within 1 MHz and excellent anti-interference performance, but not as low-cost as the ferrite clamp. See for details. *" Dimensions" on page 81*
- Ferrite clamp: featuring a good intereference suppression performance within a frequency band above 1MHz, applicable to low-power servo drives and signal cables, low-cost and easy to install

Magnetic ring and ferrite clamp		Appearance
Magnetic ring	DY644020H	
	DY805020H	
Ferrite clamp	7427122S	

Dimensions

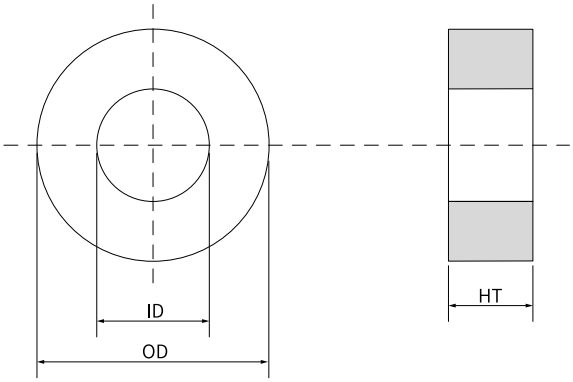

Figure 4-5 Dimension drawing of the magnetic ring

Table 4–10 Dimensions of the magnetic ring

Model	Size (OD×ID×HT) (mm)
DY644020H	64 × 40 × 20
DY805020H	80 × 50 × 20

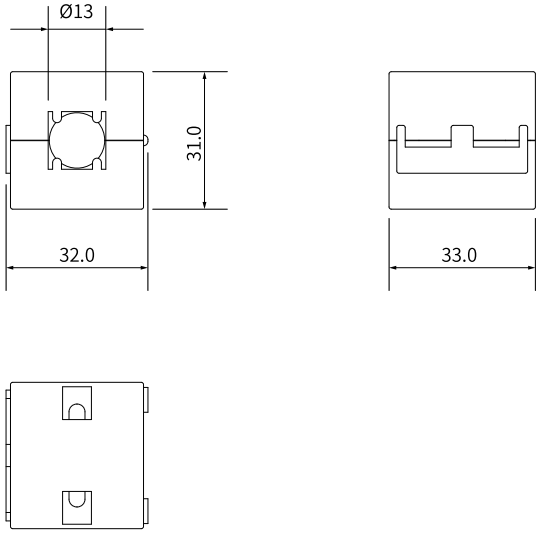

Figure 4-6 Dimension drawing of the ferrite clamp

Table 4–11 Specifications of the ferrite ring

Model	Size (Length × OD × ID) (mm)
7427122S	32.0 × 31 × 13

4.4 Absolute Encoder Batteries

Model selection

Select an appropriate battery according to the following table.

Table 4–12 Description of the absolute encoder battery

Battery Specifications	Item	Rated Values			Condition
		Min. Value	Typical Value	Max. Value	
Output: 3.6 V, 2500 mAh	External battery voltage (V)	3.2	3.6	5	In standby state[1]
	Circuit fault voltage (V)	-	2.6	-	In standby state
	Battery alarm voltage (V)	2.85	3	3.15	-
	Current consumed by the circuit (uA)	-	2	-	In normal operation[2]
		-	10	-	In standby state, shaft at standstill
		-	80	-	In standby state, shaft rotating
	Ambient temperature (°C)	0	-	40	Same as the motor.
	Storage temperature (°C)	-20	-	60	

The preceding values are obtained under an ambient temperature of 20°C.

Note

- [1] The "standby state" means the encoder counts the multi-turn data by using the power from the external battery when the servo drive power supply is not switched on. In this case, data transceiving stops.
- [2] During normal operation, the absolute encoder supports one-turn or multi-turn data counting and transceiving. Power on the servo drive after connecting the absolute encoder properly. The encoder starts data transceiving after a short delay of about 5s upon power-on. The motor speed must be lower than or equal to 10 rpm during transition from the standby state to the normal operation state (upon power-on). Otherwise, Er.740 (Encoder fault) may occur. In this case, you need to power off and on the servo drive again.

Design life of the battery

The following calculation only covers the current consumed by the encoder.

Assume that the drive works normally for T1 in a day, the motor rotates for T2 after the drive is powered off, and the motor stops rotating for T3 after power-off [unit: hour (H)].

Example:

Table 4–13 Design life of the absolute encoder battery

Item	Schedule 1	Schedule 2
Working Days in Different Operating Conditions in 1 Year	313	52
T1 (h)	8	0
T2 (h)	0.1	0
T3 (h)	15.9	24

Capacity consumed in 1 year = (8 h × 2 uA + 0.1 h × 80 uA + 15.9 h × 10 uA) x 313 + (0 h × 2 uA + 0 h × 80 uA +24 h × 10 uA) x 52 ≈ 70 mAh

Design life = Battery capacity ÷ Capacity consumed in 1 year = 2600 mAh ÷ 70 mAh = 37.1 years

5 Compliance List

CE Certification

Command	Standard	
EMC directive 2014/30/EU	Servo drive	EN 61800-3
	Servo Motor	EN 61800-6-2 EN 61800-6-4 EN 55011
Low Voltage Directive 2014/35/EU	Servo drive	EN 61800-5-1
	Servo Motor	EN 60034-1 EN 60034-5
RoHS 2011/65/EU	Servo drive	EN 50581
	Servo Motor	

UL/cUL certification

Certification	Standard	
UL/cUL certification	Servo drive	UL61800-5-1 C22.2 No.274-17
	Servo Motor	UL 1004-1 UL 1004-6 CSA C22.2 No. 100-14

Note

The drive complies with the latest version of directives and standards for CE and UL/cUL certifications.

KC Certification

SV670 series servo drives are KC-certified.

6 Capacity Selection Example for Servo Motor

6.1 Capacity Selection Example for Position Control

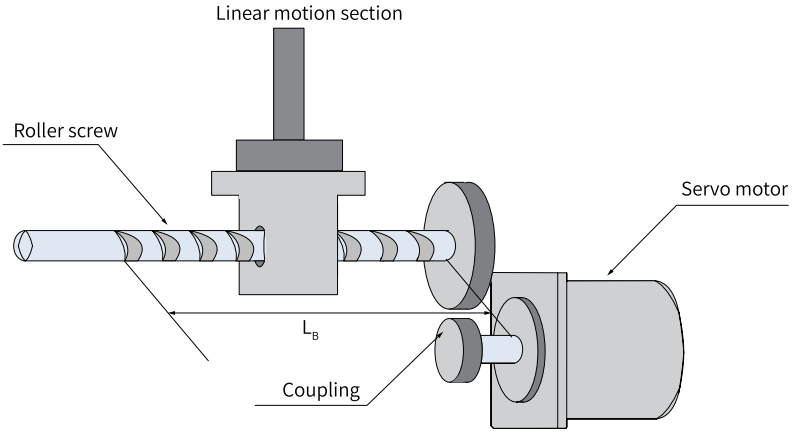

Load speed (V_L) : 15 m/min

Mass of the rectilinear motion part (m): 80 kg

Roller screw length (L_B) = 0.8 m

Roller screw diameter (d_B) = 0.016 m

Roller screw pitch (P_B) = 0.005 m

Mass of the coupling (m_c): 0.3 kg

Outer diameter of the coupling (d_c): 0.03 m

Times of feeding (n): 40/min

Length of feeding (L): 0.25 m

Feeding time (t_m) < 1.2s

Electrical stopping precision (δ) = ±0.01 mm

Friction coefficient (μ): 0.2

Mechanical efficiency (η) = 0.9 (90%)

1. **Speed diagram**

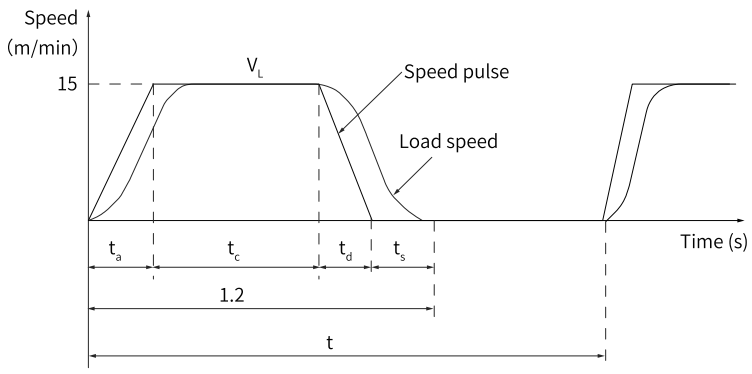

$$t = \frac{60}{n} = \frac{60}{40} = 1.5(s)$$

$$T_a = t_d,\ t_s = 0.1(s)$$

$$Ta = t_m - t_s - \frac{60L}{V_L} = 1.2 - 0.1 - \frac{60 \times 0.25}{15} = 0.1(s)$$

$$t_c = 1.2 - 0.1 - 0.1 \times 2 = 0.9(s)$$

2. **Rotational speed**

- Rotational speed of the load shaft

$$n_L = \frac{V_L}{P_B} = \frac{15}{0.005} = 3000 \text{ (rpm)}$$

- Rotational speed of the motor shaft
  As the coupling is directly connected, the gear ratio (1/R) is 1:1.

$$n_M = n_L \times R = 3000 \times 1 = 3000 \text{ (RPM)}$$

3. **Load torque**

$$T_L = \frac{9.8\,\mu \times m \times P_B}{2\pi R \times \eta} = \frac{9.8 \times 0.2 \times 80 \times 0.005}{2\pi \times 1 \times 0.9} = 0.139 \text{ (N}\cdot\text{m)}$$

4. **Load moment of inertia**

- Rectilinear motion part

$$J_{LI} = m \times \left(\frac{P_B}{2\pi R}\right)^2 = 80 \times \left(\frac{0.005}{2\pi \times 1}\right)^2 = 0.507 \times 10^{-4} \text{ (kg}\cdot\text{m}^2\text{)}$$

- Roller screw

$$J_B = \frac{\pi}{32} P \times L_B \times d_B^4 = \frac{\pi}{32} \times 7.87 \times 10^3 \times 0.8 \times (0.016)^4 = 0.405 \times 10^{-4} \text{(kg}\cdot\text{m}^2\text{)}$$

- Coupling

$$J_C = \frac{1}{8} m_c \times d_c^4 = \frac{1}{8} \times 0.3 \times (0.03)^2 = 0.338 \times 10^{-4} \text{(kg}\cdot\text{m}^2\text{)}$$

5. **Load moving power**

$$P_O = \frac{2\pi \times n_M \times T_L}{60} = \frac{2\pi \times 3000 \times 0.139}{60} = 43.7 \text{ (W)}$$

6. **Load acceleration power**

$$P_a = \left(\frac{2\pi}{60} \times n_m\right)^2 \frac{J_L}{t_a} = \left(\frac{2\pi}{60} \times n_m\right)^2 \times \frac{J_{LI} + J_B + J_C}{t_a}$$

$$= \left(\frac{2\pi}{60} \times 3000\right)^2 \times \frac{1.25 \times 10^{-4}}{0.1} = 123.4 \text{ (W)}$$

7. **Temporary settings of the servo motor**

- Selection condition

  $T_L \leqslant$ Rated torque of the motor

  $P_a + P_o$ = (1 to 2) x Rated output of the motor

  $n_M \leqslant$ Rated speed of the motor

  $J_L \leqslant$ Allowable load moment of inertia of the servo unit

  Perform the following provisional selections according to preceding conditions:

  Servo motor: MS1H1-20B30CB-A331Z

  Servo drive: SV670PS2R8I

- Specifications of the servo motor and servo drive

Rated output: 200 (W)

Rated speed: 3000 (RPM)

Rated torque: 0.637 (N·m)

Maximum instantaneous torque: 1.91 (N·m)

Rotor moment of inertia: 0.158 x 10^{-4} (kg·m^2)

Allowable load moment of inertia: 3.69 x 10^{-4} (kg·m^2)

Number of encoder pulses: 8388608 (P/R)

8. **Confirmation of the servo motor selected temporarily**

Confirm the startup torque required

$$T_p = \frac{2\pi \times n_M \times (J_M + J_L)}{60 \times t_a} + T_L = \frac{2\pi \times 3000 \times (0.158 + 1.25) \times 10^{-4}}{60 \times 0.1} + 0.139$$

$$= 0.581(N \cdot m) < \text{Max. instantaneous torque} \quad \text{Satisfactory}$$

Confirm the brake torque required

$$T_s = \frac{2\pi \times n_M \times (J_M + J_L)}{60 \times t_a} - T_L = \frac{2\pi \times 3000 \times (0.158 + 1.25) \times 10^{-4}}{60 \times 0.1} - 0.139$$

$$= 0.303(N \cdot m) < \text{Max. instantaneous torque} \quad \text{Satisfactory}$$

Confirm the effective torque value

$$T_{rms} = \sqrt{\frac{T_p^{\,2} \times t_a + T_L^{\,2} \times t_c + T_s^{\,2} \times t_d}{t}}$$

$$= \sqrt{\frac{(0.581)^2 \times 0.1 + (0.139)^2 \times 0.9 + (0.303)^2 \times 0.1}{1.5}}$$

$$= 0.2\ (N \cdot m) < \text{Rated torque} \quad \text{Satisfactory}$$

The capacities of the servo motor and servo drive selected temporarily based on preceding steps are available for use. The position control analysis is as follows.

9. **Electronic gear ratio (B/A)**

The electrical stopping precision (δ) is ±0.01 mm, so the position detection unit (△L) is 0.01 mm/pulse.

$$\frac{P_B}{\Delta L} \times \frac{B}{A} = \frac{5}{0.01} \times \frac{B}{A} = 8388608$$

$$\frac{B}{A} = \frac{8388608 \times 0.01}{5} = \frac{8388608}{500}$$

10. **Reference pulse frequency**

$$v_s = \frac{1000 \times V_L}{60 \times \Delta L} = \frac{1000 \times 15}{60 \times 0.01} = 25000\ (\text{pps})$$

11. **Offset counter droop pulse**

- Set the position loop gain (K_p) to 30 (l/s).

$$\varepsilon = \frac{v_s}{K_p} = \frac{25000}{30} = 833\ (\text{pulse})$$

- Electrical stop precision

$$\pm\Delta\varepsilon = \pm\frac{\varepsilon}{(\text{Servo drive control range}) \times \frac{n_M}{n_R}} = \pm\frac{833}{5000 \times \frac{3000}{3000}}$$

$$= \pm 0.17 < \pm 1\ (\text{pulse}) \pm 0.01\ (\text{mm/pulse})$$

By observing preceding steps, the servo motor and servo drive selected temporarily for position control are available for use.

6.2 Capacity Selection Example for Speed Control

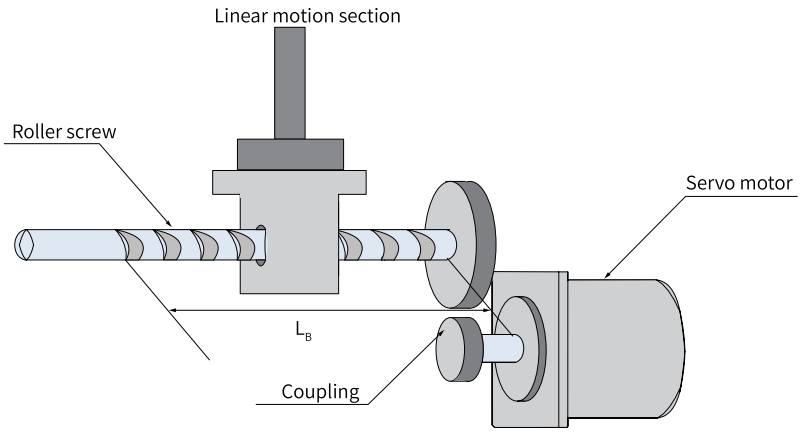

Load speed (V_L) : 15 m/min
Mass of the rectilinear motion part (m): 80 kg
Roller screw length (L_B) = 0.8 m
Roller screw diameter (d_B) = 0.04 m
Roller screw pitch (P_B) = 0.01 m
Mass of the coupling (m_c): 1 kg
Outer diameter of the coupling (d_c): 0.06 m
Times of feeding (n): 40/min
Length of feeding (L): 0.25 m
Feeding time (t_m) < 1.2s
Friction coefficient (μ): 0.2
Mechanical efficiency (η) = 0.9 (90%)

1. **Speed diagram**

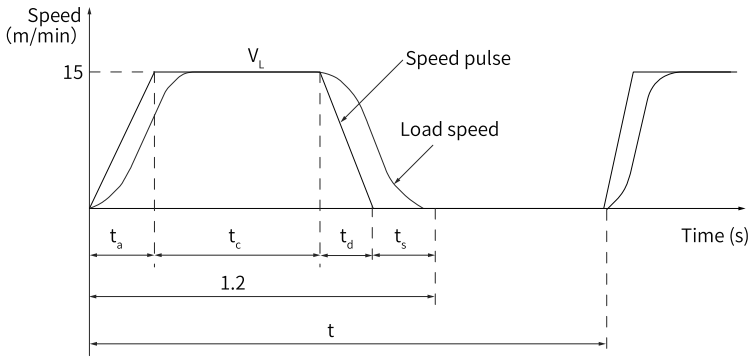

$$t = \frac{60}{n} = \frac{60}{40} = 1.5(s)$$

Set t_a to the same value as t_d.

$$t_a = t_m - t_s - \frac{60 \times L}{V_L} = 1.2 - 0.1 - \frac{60 \times 0.25}{15} = 0.1(s)$$

$$t_c = 1.2 - 0.1 - 0.1 \times 2 = 0.9(s)$$

2. **Rotational speed**

- Rotational speed of the load shaft

$$n_L = \frac{V_L}{P_B} = \frac{15}{0.01} = 1500 \text{ (rpm)}$$

- Rotational speed of the motor shaft
  As the coupling is directly connected, the gear ratio (1/R) is 1:1.

$$n_M = n_L \times R = 1500 \times 1 = 1500 \text{ (RPM)}$$

3. **Load torque**

$$T_L = \frac{9.8\,\mu \times m \times P_B}{2\pi \times R \times \eta} = \frac{9.8 \times 0.2 \times 80 \times 0.01}{2\pi \times 1 \times 0.9} = 0.277 \text{ (N·m)}$$

4. **Load moment of inertia**

- Rectilinear motion part

$$J_{LI} = m \times \left(\frac{P_B}{2\pi R}\right)^2 = 80 \times \left(\frac{0.01}{2\pi \times 1}\right)^2 = 2.02 \times 10^{-4} \text{ (kg·m}^2\text{)}$$

- Roller screw

$$J_B = \frac{\pi}{32} P \times L_B \times d_B^4 = \frac{\pi}{32} \times 7.87 \times 10^3 \times 1.4 \times (0.04)^4 = 27.7 \times 10^{-4} \text{ (kg·m}^2\text{)}$$

- Coupling

$$J_C = \frac{1}{8} m_c \times d_c^4 = \frac{1}{8} \times 1 \times (0.06)^2 = 4.5 \times 10^{-4} \text{ (kg·m}^2\text{)}$$

5. **Load moving power**

$$P_O = \frac{2\pi \times n_M \times T_L}{60} = \frac{2\pi \times 1500 \times 0.277}{60} = 43.6 \text{ (W)}$$

6. **Load acceleration power**

$$P_a = \left(\frac{2\pi}{60} \times n_m\right)^2 \times \frac{J_L}{t_a} = \left(\frac{2\pi}{60} \times n_m\right)^2 \times \frac{J_C + J_B + J_{LI}}{t_a}$$

$$= \left(\frac{2\pi}{60} \times 1500\right)^2 \times \frac{34.22 \times 10^{-4}}{0.1} = 844 \text{ (W)}$$

7. **Temporary settings of the servo motor**

- Selection condition

  $T_L \leqslant$ Rated torque of the motor

  $P_a + P_o$ = (1 to 2) x Rated output of the motor

  $n_M \leqslant$ Rated speed of the motor

  $J_L \leqslant$ Allowable load moment of inertia of the servo unit

Perform the following provisional selections according to preceding conditions:

Servo motor: MS1H3-85B15CD-A331Z

Servo drive: SV670PT5R4I

- Specifications of the servo motor and servo drive
  Rated output: 850 (W)

  Rated speed: 1500 (RPM)

  Rated torque: 5.39 (N·m)

  Maximum instantaneous torque: 13.8 (N·m)

  Rotor moment of inertia: 13.0 x 10^{-4} (kg·m^2)

  Allowable load moment of inertia: 69.58 x 10^{-4} (kg·m^2)

8. **Confirmation of the servo motor selected temporarily**

Confirm the startup torque required

$$T_p = \frac{2\pi \times n_M \times (J_M + J_L)}{60 \times t_a} + T_L = \frac{2\pi \times 1500 \times (13 + 34.22) \times 10^{-4}}{60 \times 0.1} + 0.277$$

$$= 7.69(N \cdot m) < \text{Max. instantaneous torque} \quad \text{Satisfactory}$$

Confirm the brake torque required

$$T_s = \frac{2\pi \times n_M \times (J_M + J_L)}{60 \times t_a} - T_L = \frac{2\pi \times 1500 \times (13 + 34.22) \times 10^{-4}}{60 \times 0.1} - 0.277$$

$$= 7.14(N \cdot m) < \text{Max. instantaneous torque} \quad \text{Satisfactory}$$

Confirm the effective torque value

$$T_{rms} = \sqrt{\frac{T_p^{\,2} \times t_a + T_L^{\,2} \times t_c + T_s^{\,2} \times t_d}{t}}$$

$$= \sqrt{\frac{(7.69)^2 \times 0.1 + (0.277)^2 \times 0.9 + (7.14)^2 \times 0.1}{1.5}}$$

$$= 2.71(N \cdot m) < \text{Rated torque} \quad \text{Satisfactory}$$

9. **Selection result**

The servo motor and servo drive selected temporarily according to preceding steps are available for use. The torque diagram is as follows.

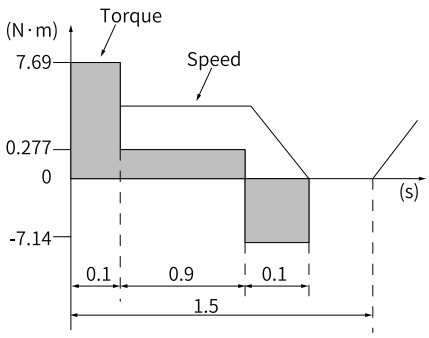

Figure 6-1 Torque diagram

19011852A03

Copyright © Shenzhen Inovance Technology Co., Ltd.

Shenzhen Inovance Technology Co., Ltd.

www.inovance.com

Add.: Inovance Headquarters Tower, High-tech Industrial Park, Guanlan Street, Longhua New District, Shenzhen
Tel: (0755) 2979 9595 Fax: (0755) 2961 9897
Customer service: 4000-300124

Suzhou Inovance Technology Co., Ltd.

www.inovance.com

Add.: No. 16 Youxiang Road, Yuexi Town, Wuzhong District, Suzhou 215104, P.R. China
Tel: (0512) 6637 6666 Fax: (0512) 6285 6720
Customer service: 4000-300124